MAGNUM ENERGY

ME-ARTR

Advanced Router

Owner's Manual

DMX POWER

Disclaimer of Liability

This manual provides detailed installation and operation information for the ME-ARTR router and is intended for the system installer and operator. The use of this manual and the conditions or methods of installation, operation, use and maintenance of the ME-ARTR are beyond the control of DMX Power. Therefore, this company does not assume responsibility and expressly disclaims liability for loss, damage, or expense whether direct, indirect, consequential or incidental that may arise out of or be any way connected with such installation, operation, use, or maintenance.

Due to continuous improvements and product updates, the images shown in this manual may not exactly match the unit purchased.

Restrictions on Use

The ME-ARTR may only be used in life support devices and systems with the express written approval of DMX Power. Failure of the ME-ARTR can reasonably be expected to cause failure of that life support device or system, or to affect the safety or effectiveness of that device or system. If the ME-ARTR fails, it is reasonable to assume the health of the user or other persons may be endangered.

Copyright Notice

Copyright 2025 by DMX Power. All rights reserved. Permission to copy, distribute, and/or modify this document is prohibited without express written permission from DMX Power.

Document Information

Description – ME-ARTR Owner's Manual

Part Number and Revision – 64-0091 Rev E

Date Published – November 2025

For the latest version of DMX documentation including this manual see the documentation menu on our website at: www.dmx-power.com

Contact Information

DMX Power
Phone (Toll-Free): 800-553-6418 or 651-653-7000
Technical Questions: support@dmx-power.com
Warranty or RMA: warranty@dmx-power.com
Web: www.dmx-power.com

Statement of Appreciation

Thank you from all of us at DMX Power for purchasing this ME-ARTR.

At DMX Power, we are committed to providing you with quality products and services, and hope that your experience with us is pleasant and professional.

Important Product Safety Instructions

This manual contains safety instructions that must be followed during the installation and operation of this product. Read all instructions and safety information contained in this manual before installing or using this product.

Safety Symbols

To reduce the risk of electrical shock, fire, or other safety hazard, the following safety symbols have been placed throughout this manual to indicate dangerous and important safety instructions.

WARNING: Indicates that failure to take a specified action could result in physical harm to the user.

CAUTION: Indicates that failure to take a specified action could result in damage to the equipment.

Info: Indicates information that emphasizes or supplements important points of the main text.

Remedy: Provides possible solutions for related issues.

Product Safety Alerts

All electrical work must be performed in accordance with local, state, and federal electrical codes.

WARNINGS:

- All electrical work must be performed in accordance with local, state and federal electric codes.
- This product is designed for indoor/compartment installation. It must not be exposed to rain, snow, moisture, or liquids of any type.
- Use insulated tools to reduce the chance of electrical shock or accidental short circuits.
- Remove all jewelry such as rings, watches, bracelets, etc., when installing or performing maintenance on the inverter.
- Always disconnect the batteries or energy source prior to installing or performing maintenance on the inverter. Live power may be present at more than one point since an inverter utilizes both batteries and AC. Turning off the inverter may not reduce this risk on some Magnum inverters. As long as AC power is connected, it passes thru the inverter regardless of the power switch on the inverter or the ON/OFF INVERTER button on the router.

Table of Contents

1.0 Introduction 1
2.0 Installation 3
2.1 Pre-Installation 3
2.1.1 Inverter Requirements 3
2.1.2 Installation Guidelines 3
2.1.3 Unpacking and Inspection 3
2.1.4 Tools Required 3
2.2 Installation Overview 4
2.3 Router Dimensions 5
2.4 Communications Cables – Provided 6
2.4.1 Network Cable 6
2.5 Communications Cable Routing 7
2.6 Mounting the Router on a Wall 8
2.7 Connecting the Communication Cables 8
2.7.1 Connecting the Remote/Network Cables 9
2.7.2 Connecting the Parallel Stack Cables 10
2.8 Installing the Router's Front Cover 10
2.9 Wiring the Auxiliary (Aux) Relay 11
3.0 Setup 12
3.1 Power-up Routine 12
3.2 Navigating the Router 12
3.3 Router Buttons and Menu Items 13
3.3.1 PORT Button and Menus 13
3.3.2 CTRL (Control) Button and Menus 14
3.3.3 METER Button and Menus 18
3.3.4 SETUP Button and Menus 23
3.3.5 TECH Button and Menus 43
4.0 ME-ARTR Menu Maps 48
5.0 Operation 54
5.1 Front Panel 54
5.1.1 LED Indicators 54
5.1.2 LCD Display 54
5.1.3 ON/OFF Buttons 55
5.1.4 Menu Buttons 55
5.1.5 Rotary SELECT Knob 55
5.1.6 Aux Relay LED Indicator 55
5.2 Operating the Inverter/Charger 56
5.2.1 Inverter Mode 56
5.2.2 Charger Mode 56
5.3 System Status Messages 56
5.3.1 Inverter Mode Status Messages 57
5.3.2 Charger Mode Status Messages 58
5.3.3 Secondary Scrolling Status Messages 63
5.3.4 Fault Mode Messages 66
5.3.5 LED Indicator Guide 74

Table of Contents (Cont.)

6.0 Troubleshooting 75
6.1 Troubleshooting Tips 76
6.1.1 Inverter Problems 76
6.1.2 Charger Problems 76
6.2 Performing an Inverter Reset 77
6.3 Powering Down the Inverter 77
7.0 Updating the ME-ARTR Router's Firmware 78
8.0 Using an AGS Module 79
8.0.1 Software Differences Between AGS Versions 79
8.1 ME-AGS-N Setup (with the ME-ARTR) 81
8.1.1 ME-AGS-N Functional Tests using the ME-ARTR 93
8.2 ME-AGS-N Operation/Monitoring (with the ME-ARTR) 94
8.2.1 Controlling the AGS using the ME-ARTR 94
8.2.2 Enabling the ME-AGS-N 95
8.2.3 Monitoring the AGS using the ME-ARTR 95
8.2.4 Starting and Stopping the Generator 98
8.2.5 ME-ARTR Router's AGS Menu Maps 99
8.2.6 ME-AGS-N Router Status Messages 102
8.3 ME-AGS-N Router Troubleshooting (with the ME-ARTR) 105
8.3.1 AGS Fault Message Screens for the Router 105
8.3.2 Resolving AGS Faults using your Router 106
9.0 Using a BMK 108
9.1 ME-BMK Setup (with the ME-ARTR) 108
9.1.1 Adjusting the Charge Efficiency Setting 108
9.2 ME-BMK Operation/Monitoring (with the ME-ARTR) 109
9.2.1 How does the ME-BMK Battery Monitor Operate? 109
9.2.2 BMK METER Menu Items (with ME-ARTR) 110
9.2.3 ME-ARTR Router's BMK Menu Maps 112
9.2.4 BMK Status Messages (with the ME-ARTR) 114
9.3 ME-BMK Troubleshooting (with the ME-ARTR) 115
9.3.1 BMK Fault Message Screens for a Magnum Router 115
9.3.2 Resolving BMK Faults using the Router 115
10.0 Attaching a Remote Control 116
11.0 Using an ACLD 117
11.1 Setting Up the ACLD using the ME-ARTR 117
11.2 Monitoring the ACLD using the ME-ARTR 117
11.2.1 ME-ARTR's ACLD METER Button Menus 117
11.2.2 ME-ARTR Router's ACLD-specific TECH Menus 118
11.2.3 ACLD Menu Maps 118
11.2.4 ACLD Router Status Messages 119
11.3 ACLD Troubleshooting using the ME-ARTR 120
11.3.1 ACLD Fault Message Screens 120
11.3.2 Resolving ACLD Faults using the ME-ARTR 120
12.0 Using a PT Charge Controller 121
12.1 Setting Up the PT Controller using the ME-ARTR 121

Table of Contents (Cont.)

12.2 Operating/Monitoring the PT Controller using the ME-ARTR 130
12.2.1 Operating the PT Charge Controller 130
12.2.2 Monitoring the PT Charge Controller 133
12.2.3 PT Charge Controller Menu Maps 137
12.2.4 PT Charge Controller Router Status Messages 142
12.3 PT Controller Troubleshooting using the ME-ARTR 146
12.3.1 PT Controller Fault Message Screens 146
12.3.2 Resolving PT Faults using the ME-ARTR 146
Appendix A – Router Display Abbreviations 151
Appendix B – Router Feature to Inverter Compatibility 156
Appendix C – Using the Router with Non-stacked Inverters 163
C-1 Using Router to Control Multiple Unconnected Inverters 163
Appendix D – Using the ME-ARTR in an AC Coupled Application 164
D-1 What is an AC Coupled System 164
D-2 Configure the Router to use in an AC Coupled System 164
Index 165

List of Figures

Figure 1-1, Front Panel Features 1
Figure 1-2, Router Features (front cover removed) 2
Figure 2-1, System Overview 4
Figure 2-2, Router Dimensions (with Front Cover) 5
Figure 2-3, Router Mounting Holes and Cutout Sections (back) 5
Figure 2-4, Remote (RJ14) Communication Cable 6
Figure 2-5, Parallel Stack (RJ45) Communication Cable 6
Figure 2-6, Concealed Mounted Remote/Network Cables 7
Figure 2-7, Surface Mounted Remote/Network Cables 7
Figure 2-8, Router Front Cover's Cable Connection Cutouts 7
Figure 2-9, Mounting the Router to a Wall 8
Figure 2-10, Connecting the Parallel Stack and Remote Cables to an Inverter 9
Figure 2-11, Connecting the Parallel Stack Cables to the Router 10
Figure 2-12, Installing the Router's Front Cover 10
Figure 2-13, Wiring the Auxiliary Relay 11
Figure 3-1, System Home Screen 12
Figure 3-2, Up and Down Arrows for Hidden Lines 12
Figure 3-3, PORT Button 13
Figure 3-4, CTRL (Control) Button and Menus 14
Figure 3-5, METER Button and Menus 18
Figure 3-6, Current Flow – Inverter Mode 21
Figure 3-7, Current Flow – Standby Mode 21
Figure 3-8, Current Flow – Load Support Mode 21
Figure 3-9, ALL Ports vs Port-specific METER Menus 22
Figure 3-10, Accessing Port-specific METER Menus 22
Figure 3-11, SETUP Button 23

List of Figures (Cont.)

Figure 3-12, CV Charge Done Time/Amps Charge Stages 35
Figure 3-13, Hold CV Charge Volts CC/CV Charge Stages 36
Figure 3-14, Final Charge Stage – Multi-Stage 41
Figure 3-15, Final Charge Stage – Float 41
Figure 3-16, Final Charge Stage – Silent 41
Figure 3-17, TECH Button 43
Figure 3-18, Port-Specific TECH Menus 44
Figure 3-19, Inverter Fault History (first and second screens) 45
Figure 3-20, AGS Fault History 45
Figure 3-21, PT Controller Fault History (first and second screens) 45
Figure 4-1, PORT/CTRL Button Menu Maps 48
Figure 4-2, METER Button (ALL Ports & Port-specific) Menu Map 49
Figure 4-3, SETUP Button (System and Inverter Setup – ALL Ports) Menu Map 50
Figure 4-4, SETUP Button (Charger Setup – ALL Ports) Menu Map 51
Figure 4-5, TECH Button (ALL Ports) Menu Map 52
Figure 4-6, TECH Button (Single Ports) Menu Map 53
Figure 4-7, Legend Key for Menu Maps 53
Figure 5-1, ME-ARTR Front Panel Controls and Indicators 54
Figure 5-2, Aux Relay LED 55
Figure 5-3, SYSTEM Status Home Screens 57
Figure 5-4, Empty 57
Figure 5-5, Inverting Mode 57
Figure 5-6, Inverter Standby Mode 58
Figure 5-7, Off Mode 58
Figure 5-8, Searching Mode 58
Figure 5-9, Unknown Mode ## 58
Figure 5-10, Absorb Charging Mode 59
Figure 5-11, Bulk Charging Mode 59
Figure 5-12, Charger Standby Mode 59
Figure 5-13, Charging Mode 59
Figure 5-14, Constant Current Mode 60
Figure 5-15, Constant Voltage Mode 60
Figure 5-16, Equalizing Mode 60
Figure 5-17, Float Charging Mode 61
Figure 5-18, Full Charge Mode 61
Figure 5-19, Load Support AAC Mode 62
Figure 5-20, Load Support VDC Mode 62
Figure 5-21, Silent Mode 62
Figure 5-22, AC In – Disabled Mode 63
Figure 5-23, Gen Cooldown Mode 63
Figure 5-24, Gen Warm-up Mode 63
Figure 5-25, Inv Max Charge Time Mode 64
Figure 5-26, PT Max Charge Time 64
Figure 5-27, Reminder to EQ Mode 65
Figure 5-28, SOC Connect Mode 65
Figure 5-29, Time Connect Mode 65
Figure 5-30, VDC Connect Mode 65
Figure 5-31, AC Backfeed Mode 66

List of Figures (Cont.)

Figure 5-32, AC Overload Fault....66
Figure 5-33, Breaker Tripped Fault....67
Figure 5-34, Dead Battery Charge Fault....67
Figure 5-35, FET Overload Fault....67
Figure 5-36, High Battery Fault....68
Figure 5-37, High Battery Temperature....68
Figure 5-38, High Speed Bus Fault....68
Figure 5-39, High Volts AC Fault....69
Figure 5-40, Low Battery Fault....69
Figure 5-41, No Inverter Found!....69
Figure 5-42, Overcurrent Fault....70
Figure 5-43, Overtemp Fault....70
Figure 5-44, Stuck Relay Fault....70
Figure 5-45, Tfmr Overtemp Fault....71
Figure 5-46, Unknown Fault ##....71
Figure 5-47, StackClock Fault....72
Figure 5-48, Stack Mode Fault....72
Figure 5-49, StackPhase Fault....72
Figure 5-50, Internal Bridge Fault....73
Figure 5-51, Internal Charger Fault....73
Figure 5-52, Internal NTC Fault....73
Figure 5-53, Internal Relay Fault....73
Figure 6-1, Performing an Inverter Reset....77
Figure 7-1, ME-ARTR Router's Firmware SD Card Slot....78
Figure 8-1, ME-ARTR's AGS Configuration Access Buttons....79
Figure 8-2, AGS PORT, CONTROL, METER, and TECH Menu Maps....99
Figure 8-3, AGS SETUP Menu Maps (Section 1)....100
Figure 8-4, AGS SETUP Menu Maps (Section 2)....101
Figure 8-5, ME-AGS-N Fault Message – Router Screens....105
Figure 9-1, Ending Battery Voltage Versus Time....110
Figure 9-2, BMK SETUP Menu Maps....112
Figure 9-3, BMK METER Menu Maps (ALL Ports)....113
Figure 9-4, BMK METER Menu Map (Port-specific)....113
Figure 9-5, ME-BMK Fault Message – Router Screens....115
Figure 10-1, Accessing the RC Setup Menu....116
Figure 11-1, ACLD METER Menu Map....118
Figure 11-2, ACLD Fault Message (Example)....120
Figure 12-1, CV Charge Done Time/Amps (PT Controller)....123
Figure 12-2, Hold CV Charge Volts (PT Controller)....124
Figure 12-3, Multi-Stage Charging (PT Controller)....125
Figure 12-4, PT Charge Controller CTRL Menu Map....137
Figure 12-5, PT Charge Controller METER Menu Map....138
Figure 12-6, PT Charge Controller Data History Matrix Menu Map....139
Figure 12-7, PT Charge Controller SETUP1 Menu Map....140
Figure 12-8, PT Charge Controller SETUP2 Menu Map....141
Figure 12-9, PT Controller Fault Message (Example)....146

List of Tables

Table 3-1, Battery Type to Charge Voltages 33
Table 3-2, Battery Amp/Hrs Capacity to Suggested Absorb Time 37
Table 3-3, Inverter/Charger Default Settings on ME-ARTR 47
Table 5-1, LED Indicator Guide 74
Table 6-1, Router Troubleshooting Guide 75
Table 8-1, Software Differences Between AGS Versions 80
Table 8-2, ME-ARTR Autostart/Autostop Matrix 81
Table 8-3, AGS Router Operational Statuses 102
Table 8-4, AGS Router Start Statuses 103
Table 8-5, AGS Router Fault Statuses 103
Table 8-6, AGS Default Settings on ME-ARTR 104
Table 9-1, BMK Router Operational Statuses 114
Table 9-2, BMK Router Fault Statuses 114
Table 11-1, ACLD Router Operational Statuses 119
Table 12-1, PT Default Settings on ME-ARTR 137
Table 12-2, PT Controller Router Operational Statuses 142
Table 12-3, PT Router Relay Statuses 142
Table 12-4, PT Router Fault Statuses 143
Table 12-5, PT Router Charge Modes 144
Table 12-6, PT Router Power Statuses 145
Table A-1, Abbreviations on Router Display 151
Table B-1, ME-ARTR (Version 4.0) Compatibility Matrix 156

1.0 Introduction

The ME-ARTR (or "advanced router") has many of the same features as the ME-ARC, with the added functionality required to parallel Magnum MS-PAE or MS-PE inverter/chargers. The advanced router is designed to easily and quickly connect multiple inverter/chargers in parallel without the need to program each inverter. The ME-ARTR can accommodate up to: four MS-PAE or MS-PE inverter/chargers in parallel, two AGS modules, six BMKs, and one remote control.

Info: This manual is for the ME-ARTR with version 4.0 or higher; see the *TECH: 02 Port Vers* section on page 44 for information on how to determine your version level.

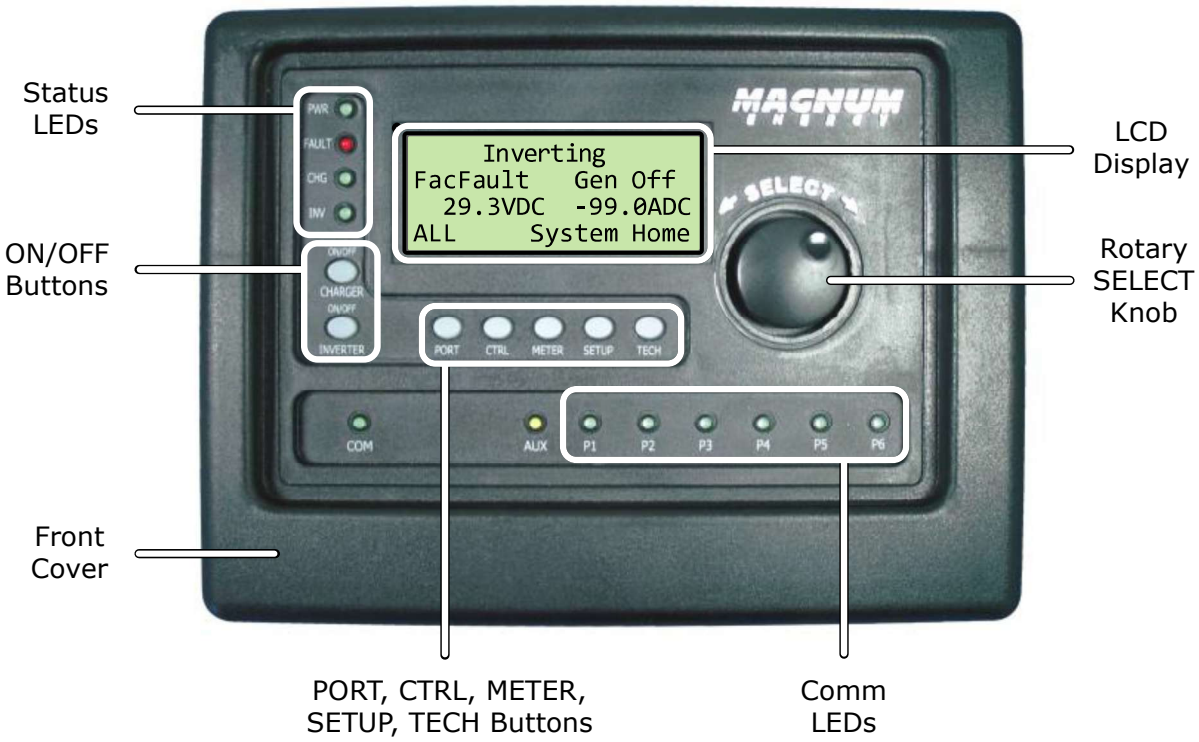

Figure 1-1, Front Panel Features

The ME-ARTR is equipped with the following features:

- **Status LEDs (x4)** – At-a-glance LEDs that provide the inverter/charger's status in a straightforward way.
- **LCD Display** – A 20 x 4 line (80 characters total) alphanumeric display used for setting up the inverter/charger operation, as well as viewing current status or fault messages.
- **ON/OFF Buttons (x2)** – ON/OFF buttons that allow all the connected inverters or chargers to be quickly enabled or disabled.

  Info: The router's ON/OFF INVERTER and ON/OFF CHARGER buttons function normally when a ME-ARC is connected through the router in a parallel system.

- **Rotary SELECT Knob** – A rotary encoder knob that is similar to a car dash radio knob and is used to quickly scroll through Ports 1-6, or to select various menu items and settings. Pressing this rotary knob allows you to select a menu item or to save a setting, once it is displayed on the LCD.
- **Comm LEDs (x6)** – At-a-glance LEDs that provide the connection statuses of the communication ports.
- **Front Cover** – Removable front frame cover, allows access to the cable connections and mounting holes.

- **Menu Buttons (x5)** – Allow the inverter or charger to be configured to your specific system preferences. These buttons also allow simple access to menu items that can help with monitoring and troubleshooting your inverter/charger system.

  PORT Button – This button accesses the six communication and accessory ports to display information on the connected devices.

  CTRL Button – This button is used to select inverter, charger, and AGS functions previously set up using the SETUP button.

  METER Button – This button is used to access 'read only' DC, AC, Timer, AGS, and BMK meters.

  SETUP Button – This button is used to access setup menus for the inverter, charger, AGS, and BMK. The SETUP button may be password protected to keep unauthorized users from accessing the SETUP menus.

  TECH Button – This button is used to access technical information, fault history, and to set a password for the SETUP button.
- **Auxiliary (Aux) Relay** – The ME-ARTR provides an Auxiliary Relay (Item G below) that can be programmed to work either as a voltage-controlled relay (stays opened or closed based on VDC, and activates either as an active high or active low type relay with an adjustable time delay), a SOC-controlled relay (stays opened or closed based on the battery's state of charge*), or used as an inverter fault detection relay (opens if an inverter fault occurs). See Section 2.9 for more information on this relay, as well as instructions on how to wire and set up the Aux Relay (using the CTRL button's *04 ARTR Aux Relay* menu).

  ***** *Requires the optional ME-BMK (Battery Monitor Kit) to be installed.*
- **SD Card Slot** – Allows you to download and install updated firmware from the Magnum Energy product website—using a standard SD memory card. See Section 7.0 for more info.

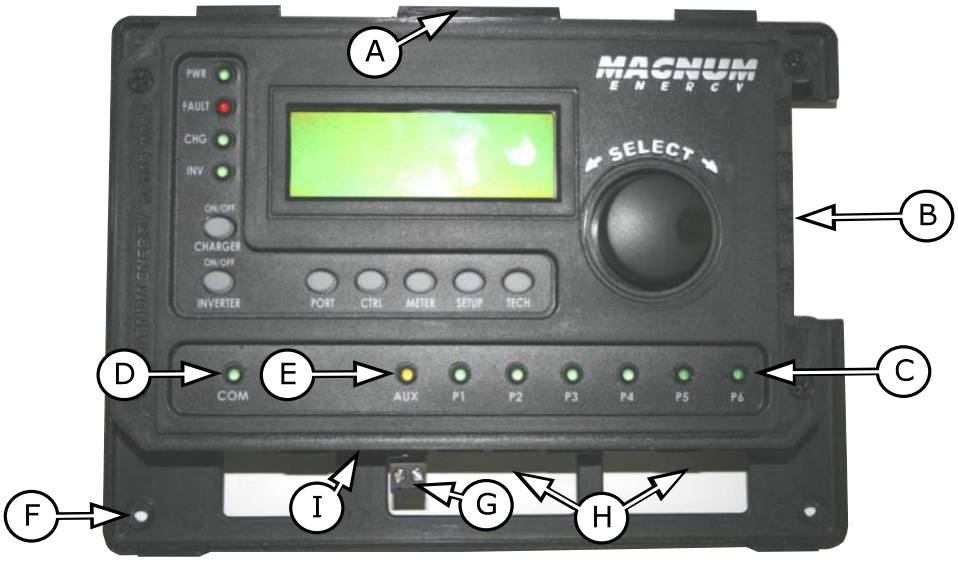

(A) Mounting tabs for front cover

(B) Parallel stack ports (x4)

(C) Six LEDs for communication (P1-P6)

(D) LED for future use (not functional)

(E) LED for Aux Relay operation

(F) Mounting screw holes (x4)

(G) Aux Relay 2-wire terminal

(H) Six Comm ports (P1-P6)

(I) SD Card Slot

Figure 1-2, Router Features (front cover removed)

2.0 Installation

Review this section and the important safety information on page ii before proceeding with the installation of your router.

WARNING: Installations should be performed by qualified personnel, such as a licensed or certified electrician. The installer determines which safety codes apply and ensures all applicable installation requirements are followed. Applicable installation codes vary depending on the specific location and application.

CAUTION: When connecting battery power to the inverter, all battery negative connections must be connected prior to the battery positive connections. When removing battery power from the inverter, the battery positive should be removed before any battery negative connections are disconnected. This prevents any communication chips/ lines from becoming the DC return path to the battery—causing permanent damage to all connected accessories.

Summation: Ensure all battery negative circuits are always connected before connecting or disconnecting battery positive.

2.1 Pre-Installation

Before proceeding, read the entire Installation section to determine how you are going to install your ME-ARTR router. Save time and avoid common, costly mistakes by thoroughly planning the installation before you start.

2.1.1 Inverter Requirements

The router is used to control multiple Magnum inverters that are normally connected in parallel. Each connected inverter must: be the same model (i.e., two MS4024PAEs), use the same settings, and be connected to the same battery bank. If the inverters are not stacked, see Appendix C.

2.1.2 Installation Guidelines

- Before connecting any wires, determine the router's cable route throughout the home or vehicle/boat—both to and from the inverter.
- Always check for existing electrical, plumbing, or other areas of potential damage BEFORE drilling or cutting into walls to mount the router.
- Make sure all wires have a smooth bend radius and do not become kinked.
- If installing this router in a boat, RV or truck, ensure the conductors passing through walls, bulkheads, or other structural members are protected. This minimizes insulation damage (such as chafing) which can be caused by vibration or constant rubbing.

2.1.3 Unpacking and Inspection

Carefully remove the ME-ARTR router from its shipping container and inspect all contents. Verify the following items are included:

- ME-ARTR router (with removable front cover)
- Two 6' RJ14 remote cables (see Figure 2-4)
- Two 6' RJ45 stack cables (see Figure 2-5)
- Four #8 x 3/4 Phillips screws (for wall mounting)

If items appear to be missing or damaged, contact an authorized Magnum Energy dealer or DMX Power.

IMPORTANT: Save your proof-of-purchase as a record of your ownership; it is needed if the unit should require in-warranty service.

2.1.4 Tools Required

Installing the router is simple and requires the following tools:

- Phillips screwdriver
- Cut-out tool (knife/saw)
- Level
- Pencil
- Drill
- Drill bit (7/64")

2.2 Installation Overview

The simplified system diagram shown in Figure 2-1 should be reviewed to assist you with planning and designing your installation. This drawing is not intended to override or restrict any national or local electrical codes, nor should it be the determining factor as to whether the installation is compliant—that is the responsibility of the electrician and the onsite inspector.

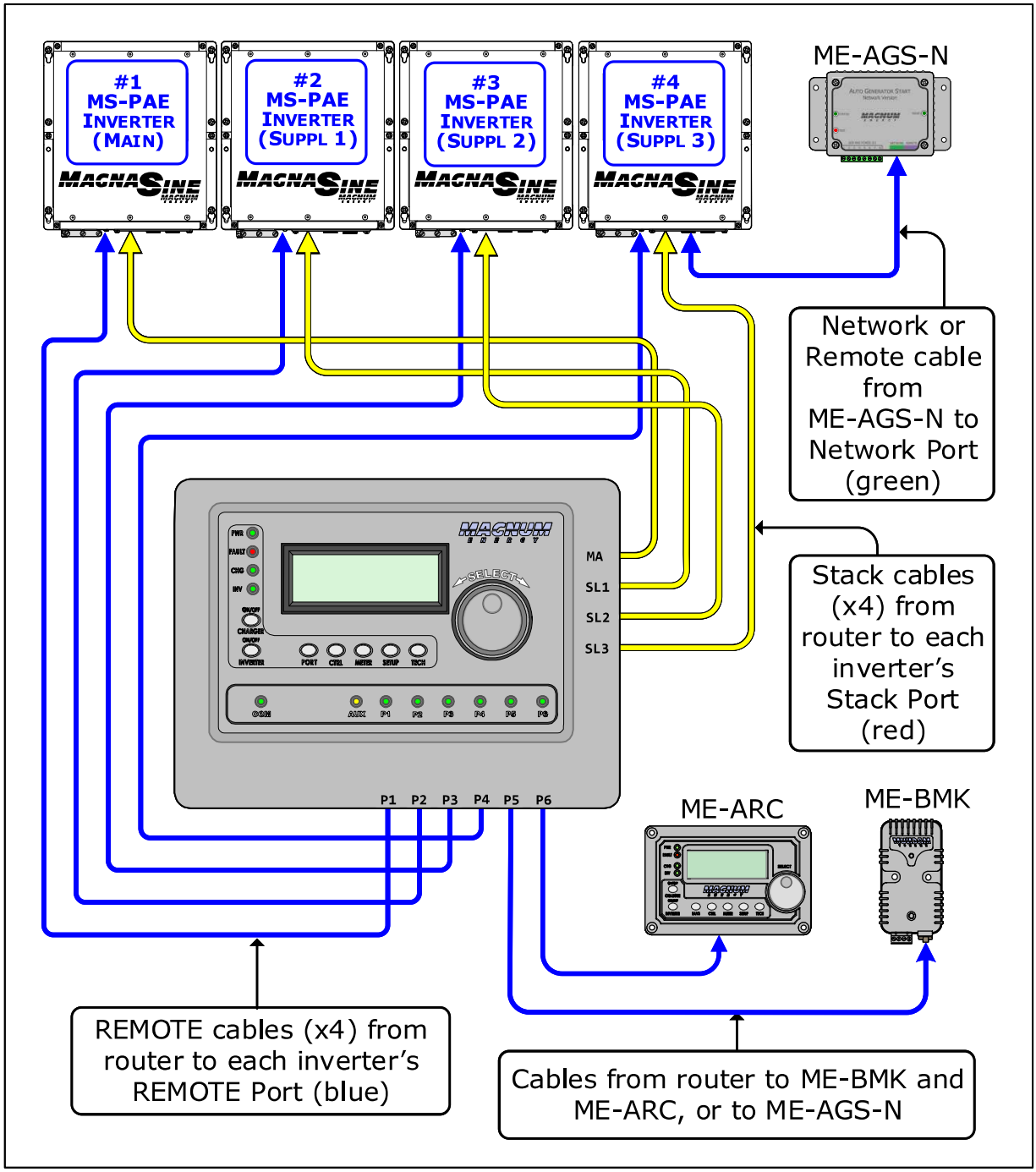

Figure 2-1, System Overview

2.3 Router Dimensions

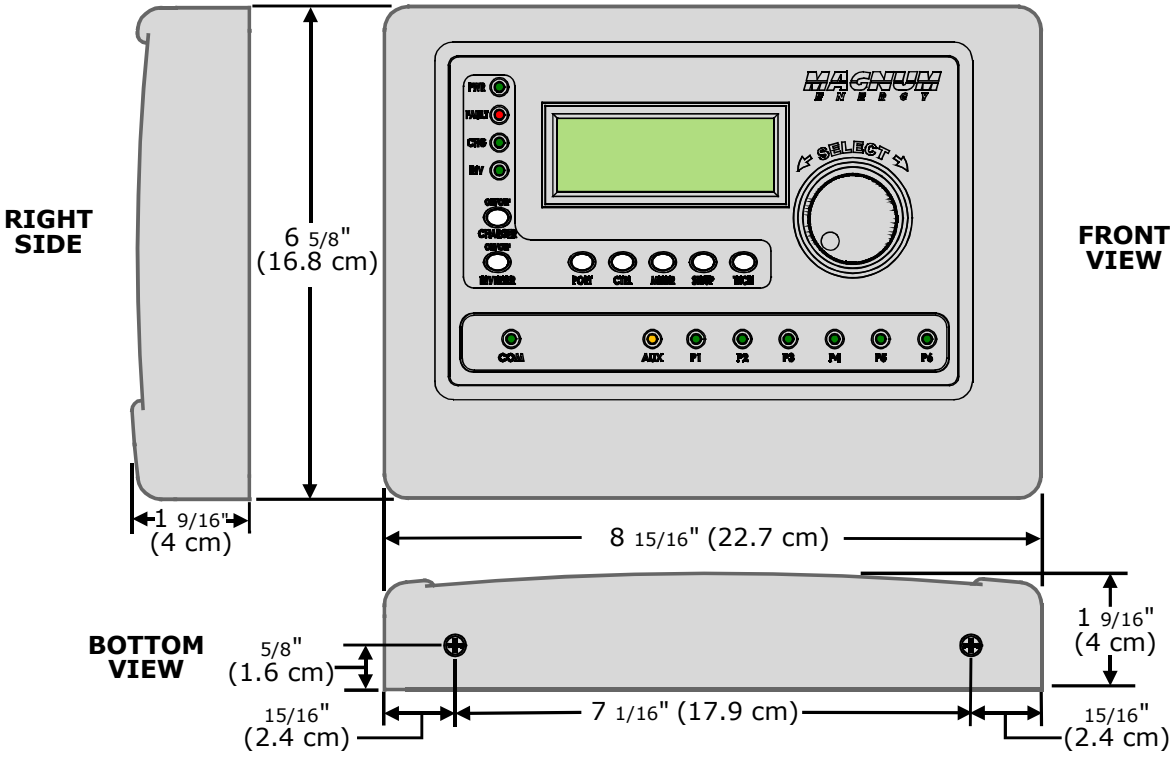

Figure 2-2, Router Dimensions (with Front Cover)

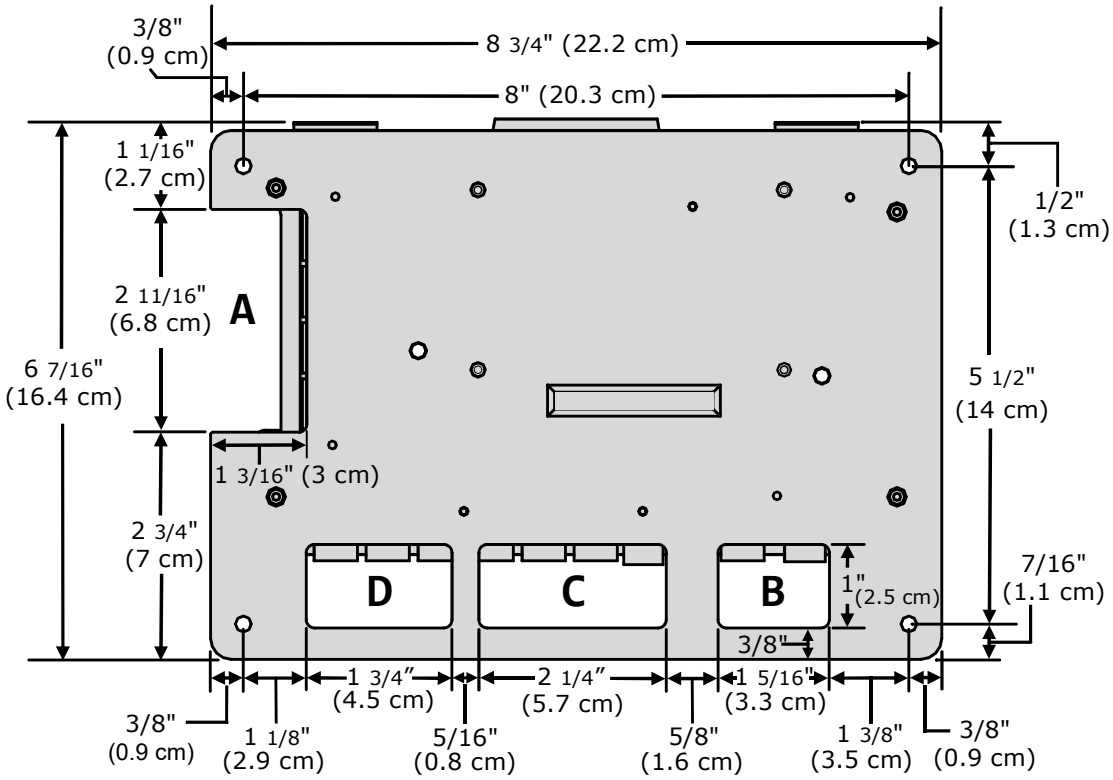

Figure 2-3, Router Mounting Holes and Cutout Sections (back)

2.4 Communications Cables – Provided

The ME-ARTR router comes with four six-foot, yellow communication cables. These cables—shown below—are provided to make connections between the router and your inverter easier and code compliant. Two of the communications cables are remote (RJ14) cables, and the other two are parallel stack (RJ45) cables.

Most systems that use the router will also use an enclosure that includes the components required in a parallel inverter system (i.e., Magnum Energy panels). The NEC/CEC requires the insulation of all conductors inside the enclosure to be rated for the highest voltage present. The router is designed to work with 120/240 VAC inverters, therefore, the voltage rating of the communications cables inside the enclosure must be rated for 300 volts or higher to be code compliant. These communications cables have 300-volt rated insulation, to meet NEC/CEC requirements DO NOT substitute for the supplied cables—most cables do not have the properly rated insulation.

Info: These cables carry less than 30 volts and are thus considered a "limited energy circuit", which is normally not required to be installed in conduit.

Info: Additional stack cables are available with the purchase of a MPX Series enclosure. Stack cables are not sold separately. If NEC/CEC requirements do not apply, a CAT 5 cable (RJ45/8P8C) can be used. However, this CAT 5 cable must be no longer than 6 feet—this ensures there is no communication issue as these cables transmit/receive high speed data.

Figure 2-4 shows a 'REMOTE' cable (two are supplied). This cable is 6' (1.83m), with a RJ14 6P4C (6-position/4-conductor) telephone-type male connector and a blue REMOTE label on each end. It comes with 300-volt rated, yellow insulation. One end of this cable is connected to one of the communication ports (P1-P6) on the router (see Figure 2-6 or 2-7), and the other end is connected to the inverter's Remote port (normally routed inside the MP enclosure) as shown in Figure 2-10.

Figure 2-4, Remote (RJ14) Communication Cable

Figure 2-5 shows a 'STACK' cable (two are supplied). This cable is 6' (1.83m), with a RJ45 8P8C (8-position/8-conductor) connector on each end. It comes with 300-volt rated, yellow insulation. One end of this cable is connected to one of the stacking ports (MA-SL3) on the router (see Figure 2-11), and the other end is connected to the inverter's Stack/Accessories port (normally routed inside the MP enclosure) as shown in Figure 2-10.

Figure 2-5, Parallel Stack (RJ45) Communication Cable

2.4.1 Network Cable

A network cable is not supplied with the router, but is included with the purchase of our networked accessories (i.e., ME-AGS-N, ME-BMK). If stacking inverters on Magnum Energy's MP Series enclosures, the regular network cable must be replaced with a high voltage network cable, which is included with the purchase of the MP Series enclosure. This cable has 300-volt rated yellow insulation, is 6' (1.83m) long, and has a RJ14 6P4C (6-position/4-conductor) telephone-type male connector on each end. One end of this cable is connected to the accessory, and the other end is connected to the router's Comm port or the inverter's Network port (see Figure 2-11). This cable is wired similar to the remote cable, and can be substituted for the remote cable, if needed.

2.5 Communications Cable Routing

Before mounting the router on a wall, determine whether to surface mount or to conceal the cable connections to the router. The cables can be flush-mounted (concealed) through an opening in a wall (Figure 2-6); or, if there is insufficient room behind the wall or no desire to cut into the wall, the cables can be surface-mounted (Figure 2-7).

Info: If the router is being installed on a Magnum Energy panel enclosure (MP), a router mounting bracket is provided with the panels. This bracket can be attached to either the left or right-hand side. Refer to the MP Owner's manual (PN: 64-0028) for information on mounting the router on a MP panel.

Figure 2-6, Concealed Mounted Remote/Network Cables

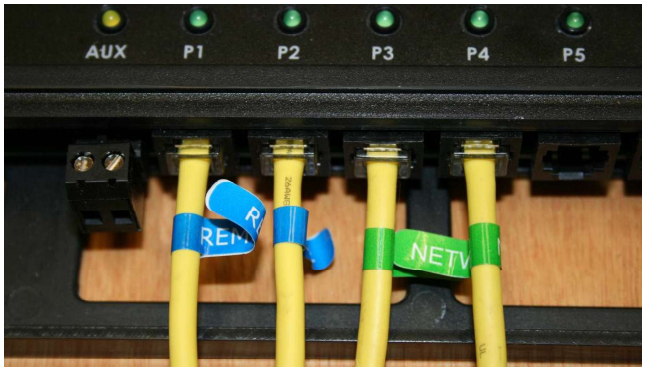

Figure 2-7, Surface Mounted Remote/Network Cables

Info: If the cables are installed on the surface, the router's front cover has cutout sections to accommodate the cables (see Figure 2-8). These cutout sections are made thinner to allow them to be easily broken or cut. Only remove those cutout sections needed for the number of cable connections you are installing.

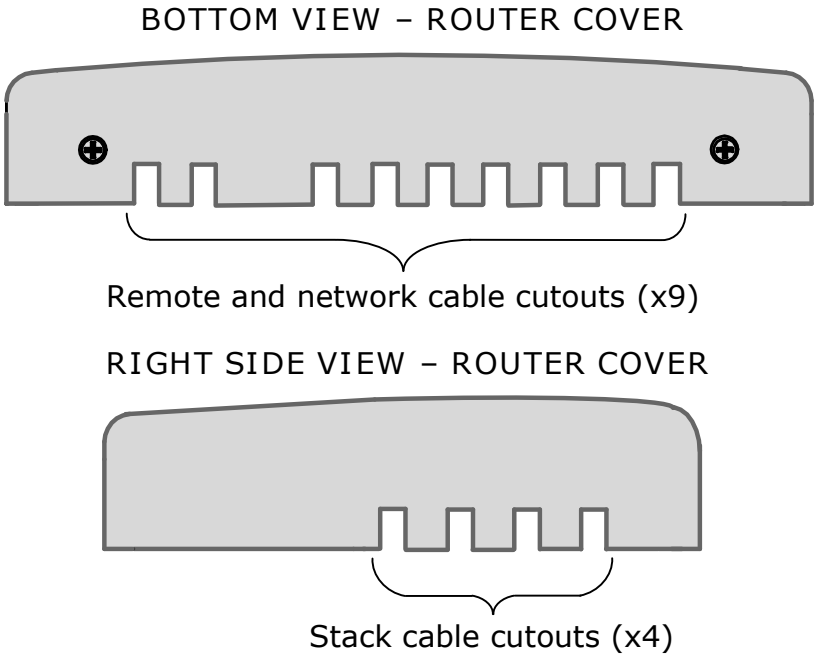

Figure 2-8, Router Front Cover's Cable Connection Cutouts

2.6 Mounting the Router on a Wall

CAUTION: The router must be located close to the inverter/chargers (within six feet). The router is designed to exchange data from the main inverter with one or multiple supplementary inverters. The high speed communication data between the stack ports on the router and the inverter ensure the supplementary inverters are synchronized to the main inverter. To ensure those communications are not impacted, DO NOT exceed the 6-foot stack cable distance between the router and each connected inverter.

Info: If a more distant monitoring location is required (more than six feet), a ME-RC50 or ME-ARC50 remote control may be connected and acts as a remote on/off switch to assist in monitoring the system. See Section 10.0 for more information.

To mount the router on the surface of a wall:

1. Select an appropriate location to install the router (see Figures 2-2 & 2-3 for the router's dimensions).
2. Remove the router's front cover, and then use the router bezel as a template to mark the screw holes and the sections of the wall (or mounting surface) to remove to accommodate the routing of the communication wires (Sections A-D on Figure 2-9).
   Note: *If you are not routing the communication wires thru the wall, there is no need to cut sections from the wall.*
3. Once the screw holes have been drilled and the optional wall sections are removed, mount the router bezel to the wall using the 4 screws that are provided.

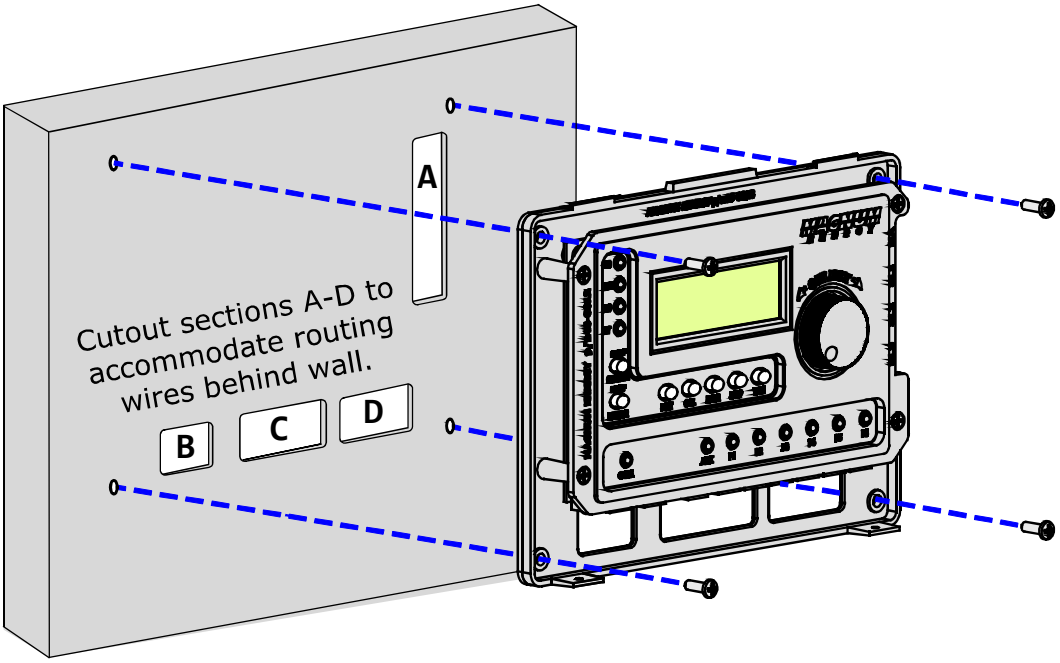

Figure 2-9, Mounting the Router to a Wall

2.7 Connecting the Communication Cables

The stack and remote communication cables are used to connect each inverter/charger directly to the router. A network cable is used to connect any accessories to the router.

Each paralleled inverter/charger requires a high speed parallel stack cable connected to a stack port on the router—marked MA (Main), SL1 (Supplementary 1), SL2 (Supplementary 2), and SL3 (Supplementary 3)—see Figure 2-1. One inverter/charger will always be designated the "Main", and subsequently any other connected inverter/chargers are designated as "Supplementaries". You can stack up to four MS-PAE or MS-PE Series inverter/chargers using one router. It is recommended that you set up the Main inverter as the first unit on the left, and Supplementary 1 as the second unit, etc.

Once the stack cables are connected, coordinate the remote cables to the communications ports so that the Main inverter is connected to Port 1 and the Supplementary 1 inverter is connected to Port 2 (the remote and stack cables are connected to the inverters in order from left to right—MA (Main), SL1, SL2, and SL3). This configuration makes it easy to keep track of which inverter is displayed on each port, and allows you to identify the main and supplementary units without having to trace the wires from the router to each inverter.

Connect the parallel stack cable to the top port (red) marked "Stack/Accessories."

Connect the network cable to the port (green) marked "Network."

Connect the remote cable to the port (blue) marked "Remote."

Figure 2-10, Connecting the Parallel Stack and Remote Cables to an Inverter

2.7.1 Connecting the Remote/Network Cables

To connect the remote cables:

1. Connect a remote cable to the Remote port on every inverter installed in parallel (see Figures 2-1 & 2-10), using the supplied cables.
2. Route the inverter-connected remote cables from each inverter/charger to your router. Follow the same route you used for the stack cables.
3. Connect each remote cable to its respective communication port on the router (P1-P6 per the number of inverters installed in parallel). Refer to Section 2.4 and Figures 2-6 & 2-7.
4. Connect any accessories to the remaining open communication ports on the router using a network cable.

Info: A maximum of four inverters can be connected to a router to work in parallel with each other. If the maximum number of inverters are connected, two open ports remain. If a ME-ARC or ME-RC remote is connected to a router, it must be connected directly to a remote communication port on the router. If there are still open communication ports on the router, connect any accessories—i.e., an ME-AGS-N or ME-BMK—directly to the router first. Then, if all the router's communication ports are being used and there are additional accessories, they may be connected to the Network ports on the inverters.

Info: Any accessory connected directly to the Network port on an inverter displays as an accessory on the router port to which that inverter is connected.

Example: A ME-AGS-N connected to the Network port on the main inverter (P1) displays as *P1A* on the router.

Info: Multiple accessories of the same type may be connected to the system, but there are limitations to the number of accessories. You may connect a maximum of one ME-RC or ME-ARC remote, two ME-AGS-N modules, and up to six ME-BMK/ME-BMK-NS accessories.

2.7.2 Connecting the Parallel Stack Cables

To connect the parallel stack cables:

1. Connect a stack cable to the Stack/Accessories port on every inverter installed in parallel (see Figures 2-1 & 2-10).
2. Route the inverter-connected stack cables from each inverter/charger to your router. Depending on your particular setup, the cables may need to be routed through walls or the MP panel enclosure system.
3. Connect each stack cable to its respective stack port on the router (MA, SL1, SL2, and SL3 ports for the appropriate number of inverters installed in parallel). See Figure 2-11.

Info: At least one stack cable must be plugged into the router's MA port in order for the router to operate any inverters.

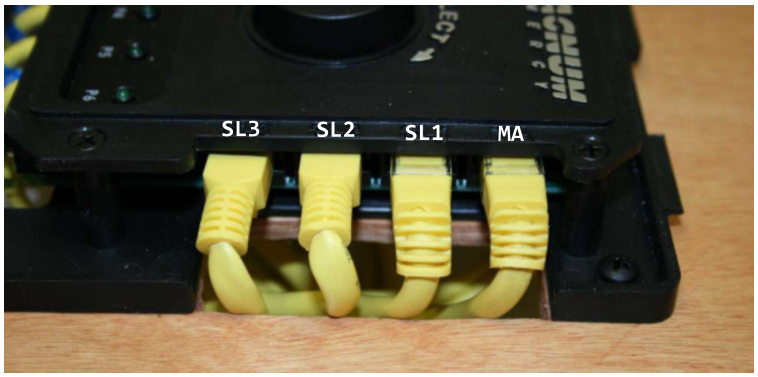

Figure 2-11, Connecting the Parallel Stack Cables to the Router

2.8 Installing the Router's Front Cover

Once all the wiring is completed, you are ready to re-install the front cover (if using the router's Aux Relay, refer to Section 2.9 before re-installing the front cover). If you have surface mounted your router, you must first remove those cutout sections from the front cover that are needed for the number of cable connections you have installed (see Figure 2-8).

Tip the top of the front cover down and hook it over the router top (protruding horizontal tabs on inside top of the front cover go under corresponding mounting tabs at top of router), and then drop the front cover down (cover the router's bottom vertical tabs). Install the two flathead Phillips screws into the bottom tabs to hold the front cover in place (see Figure 2-12).

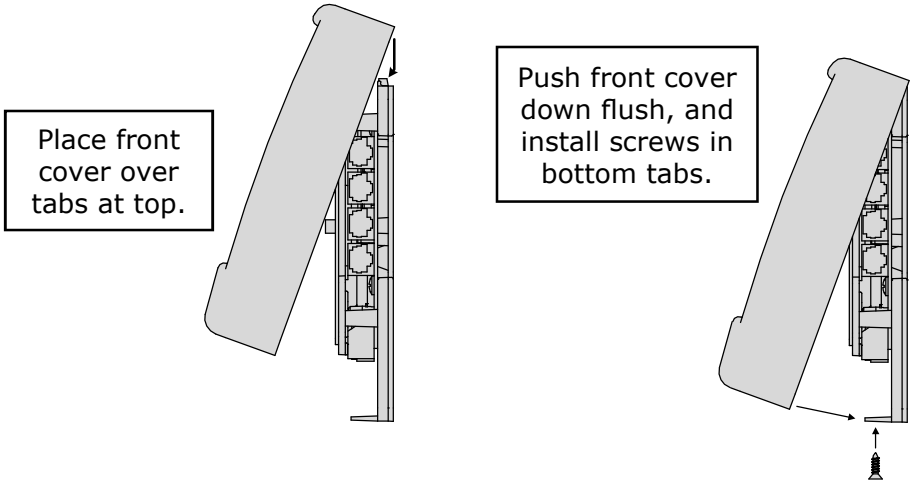

Figure 2-12, Installing the Router's Front Cover

2.9 Wiring the Auxiliary (Aux) Relay

The router's Aux Relay provides a 2-wire dry contact relay (i.e., no voltage provided) that is either open or closed, and can be wired to any device requiring a contact closure to operate. For example, it can be used as a signal relay to power a higher current relay.

Relay Information

- A single-pole, single-throw relay provided with the NO (Normally Open) and COM contacts.
- Contact rating: up to 30 VDC @ 1 amp, and from 31 VDC up to 60 VDC @ .25 amp.
- Opens if power to the router (provided through the inverter remote cable) is lost.
- Provides "dry contact" connections (it does not provide any voltage or current)—power for any external device requiring voltage or current must be provided through the relay.
- This relay is not intended to directly provide power. Rather, this relay can be used to send a signal to operate the coil of another higher amperage device that does the actual switching of power.

CAUTION:

- Any voltage connected to the relay must be less than or equal to the relay's contact ratings (Contact ratings: ≤1A up to 30 VDC, ≤.25A from 31 VDC to 60 VDC).
- An in-line fuse rated up to 1 amp (up to 30 VDC) or .25 amp (from 31 VDC to 60 VDC) must be used to protect all power circuits connected to the router's Aux Relay (do not fuse ground connections). The fuse should be located as close as possible to the power source. A fuse must be used, even if the circuit is providing only a "dry contact" or "ground" connection—it prevents damage if the connection is miswired or damaged. Ensure the fuse is correctly rated for the wire size used. Refer to national and local codes for rating and type.
- The router's Aux Relay circuit is not rated for AC volts (may cause damage if used).
- The warranty does not cover damage to this relay.

Relay Terminal Block

The router's Aux Relay is wired through an Euro-style removable connector (Figure 2-13). The connector provides a two-port screw-type terminal block for wiring. This terminal block is friction-fit into the connector and can be removed by pulling it straight out. Each port on the terminal block accepts a CU/AL single wire from #28 to #12 AWG (0.3 to 2.3 mm²).

Info: For information on setting the router's Aux Relay, refer to the *CTRL: 04 ARTR Aux Relay* menu.

Figure 2-13, Wiring the Auxiliary Relay

3.0 Setup

When a router is connected to a Magnum inverter/charger, the settings in the router determine the inverter/charger's operating parameters. This section shows you how to navigate the router, and gives you an understanding of the function of each adjustable setting. See Figures 4-1 through 4-7 for complete maps of the router's menu items and adjustable settings.

***** IMPORTANT *****

All settings/setup menus in the router are compatible with MS-PAE/MS-PE Series inverter/chargers. If you are using the router with an inverter/charger other than the MS-PAE/MS-PE Series, some features and setup menus may not be compatible and will not function. Refer to Appendix B to determine if a particular feature/setup menu is compatible with your inverter. Refer to Appendix C for additional information on using the router with non-stacked inverters.

3.1 Power-up Routine

When the router is first connected to an inverter, a power-up routine is initialized. The LCD displays "*MAGNUM ENERGY, Self Test, ME-ARTR, Version 4.0*" for approximately 5 seconds. The next several Set System Clock screens prompt you to set the current time (HOURS, MINUTES, and AM/PM) and date (MM/DD/YYYY). Once both are set, the System Home screen appears.

Info: Pressing and holding down the METER button for three seconds takes you back to the System Home screen (Figure 3-1) from any menu. The LCD display automatically returns to the System Home screen if no buttons have been pressed for five minutes.

```
 Absorb Charging
  100%   Gen Off
27.89VDC    0.0ADC
ALL      System Home
```

Figure 3-1, System Home Screen

3.2 Navigating the Router

Familiarize yourself with the controls on the front panel which are used to find, adjust, and save the desired settings (refer to Figure 1-1). They are:

- **LCD Display** – The 4-line LCD display shows status and operation information for the inverter/charger and any attached accessories. All setup menus and faults also appear on the LCD display. If there are more choices than fit on the screen, use the up and down arrows to access those choices. An up arrow indicates you must rotate the SELECT knob counterclockwise to display the next line. A down arrow requires a clockwise rotation. If both an up and down arrow display, rotate the SELECT knob clockwise or counterclockwise to display all the hidden lines. See Figure 3-2 below for an example of a screen sequence.

```
01 DC Meters        ←
02 AC Meters
03 Timers           ↓
ALL Select       METER
```

```
02 AC Meters        ↑
03 Timers           ←
04 AGS Meters       ↓
ALL Select       METER
```

```
03 Timers           ↑
04 AGS Meters
05 BMK Meters       ←
ALL Select       METER
```

Figure 3-2, Up and Down Arrows for Hidden Lines

- **Menu Buttons (x5)** – These buttons allow simple access to menu items for configuring, monitoring, and troubleshooting your inverter/charger system.
- **Rotary SELECT Knob** – This rotary knob allows you to quickly scroll through and select various menu items and settings. Pressing the knob selects the menu item to change, or saves the current selection.

Info: The "←" (left facing arrow) symbol indicates that the displayed setting has been selected and will be used (if the menu item is blinking, it has not yet been selected; press the SELECT knob to select that menu item). Refer to Figure 3-2 for an example.

3.3 Router Buttons and Menu Items

The five menu buttons (PORT, CTRL, METER, SETUP, and TECH) allow the inverter/charger system to be configured to your specific preferences. These buttons also allow you to access menu items that can help with monitoring and troubleshooting your system.

3.3.1 PORT Button and Menus

The PORT button allows you to access each active communication port. The communication port can be one of the six ports at the bottom of the router, or it can be a Remote (blue) or Network (green) port on the inverter. An inverter or accessory must be connected to a communication port in order to be programmed and to display status information.

As you press the PORT button, the home screen menu ("*Home*" appears in the bottom right corner of the router's LCD display) for each device that is communicating with the router is shown. Each home screen provides information and the status of the connected device.

Info: When you are at a specific device's home screen, you can directly access the meter and setup menus for that device by pressing the METER or SETUP button.

Info: When an accessory is plugged into a communication port (P1-P6) on the router, the PORT button displays the accessory as the corresponding port (i.e., in Figure 3-3 below, Port 3 shows "RC Home"). If an accessory is plugged into the Network port on one of the parallel inverter/chargers, the PORT button displays the accessory as "*P#A*" (i.e., a ME-AGS-N plugged into a parallel inverter/charger that is plugged into Port 1 would display as "*P1A*").

Info: After pressing the PORT button, use the SELECT knob to scroll through all the active ports, as well as all empty router communication ports.

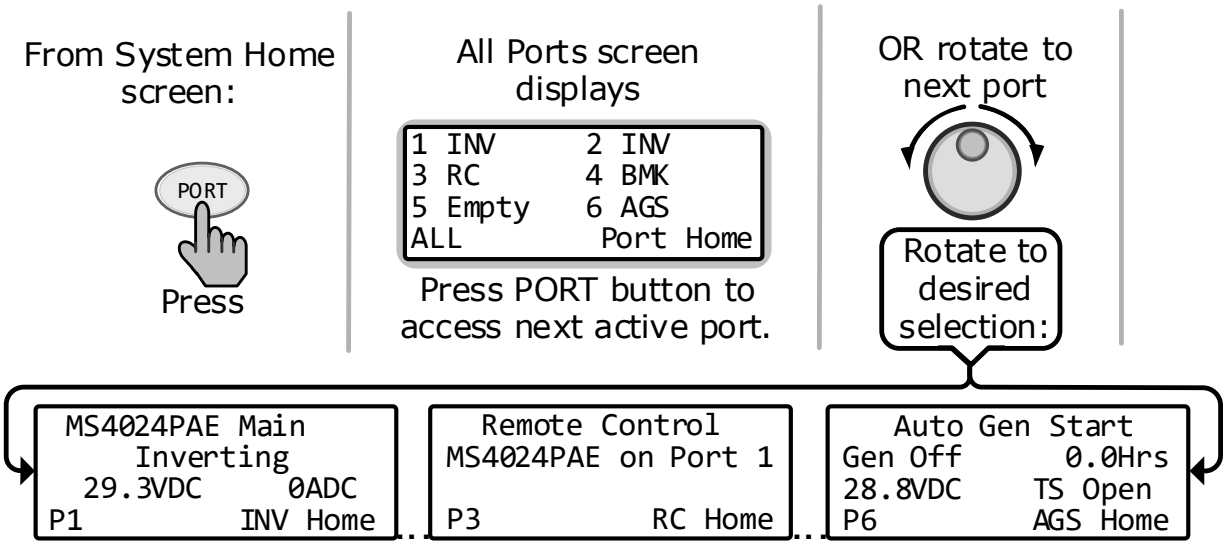

Figure 3-3, PORT Button

3.3.2 CTRL (Control) Button and Menus

The CTRL button accesses the *01 AC In Control*, *02 Charger Control*, *03 Gen Control, and 04 ARTR Aux Relay* menus.

Info: An AGS must be connected in order for the *Gen Control* menu to display unless the *TECH: 08 Show all Menus* menu has been set to "*YES*". Refer to page 47 for more info on the *TECH 08* menu. Otherwise, "*No AGS Present*" appears on the *03 Gen Control* screen.

The CTRL button gives you quick control of the main functions of the inverter/charger without having to access the SETUP button's menus in order to change the operation of the inverter/ charger or the generator. Once the settings have been programmed in the SETUP menus, the features can then be enabled using the CTRL button.

Example: The SETUP menu's *02C AC In – Time* setting sets what time of day (e.g., 12AM to 8AM) you want the inverter to connect to the incoming AC. Once this time is set, use the CTRL button to access the *Set AC In Control* menu item and select *Time Connect*. When *Time Connect* is selected, the inverter/charger connects to AC when the time is between 12AM and 8AM.

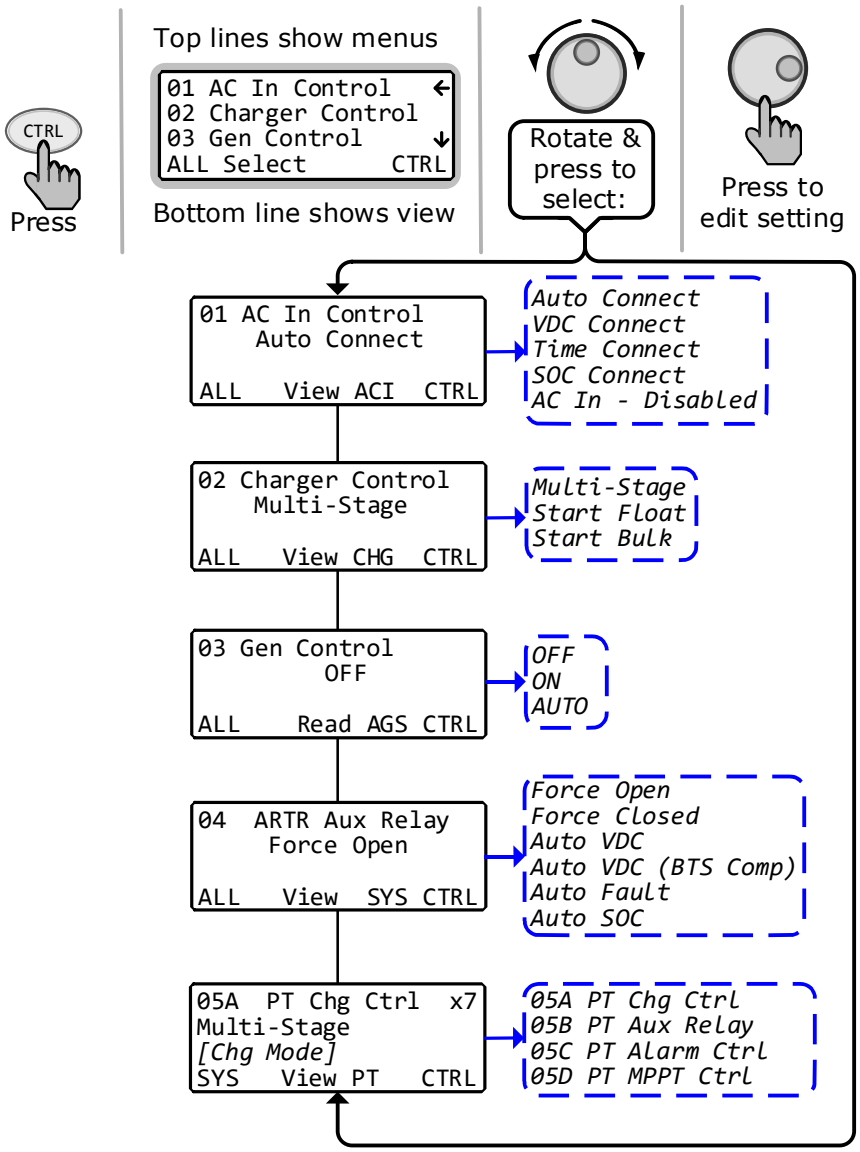

Figure 3-4, CTRL (Control) Button and Menus

CTRL: 01 AC In Control

The *01 AC In Control* menu has four different conditions in which the inverter/charger connects to an incoming AC power source. Only one may be selected—multiple conditions can be set up and enabled, but only one can be active at a time.

Info: The top status line of the alternates the inverter/charger status with a secondary AC IN status when AC is present, but is **not** connecting as a result of a setting made in the SETUP menu.

Example: AC is present, but *Time Connect* has been selected from the *01 AC In Control* menu and the current time of day is 6PM. The SETUP menu's *02C AC In – Time* current setting is *2AM-8AM*. The current time of 6PM is outside the connect time, so the inverter/charger will not connect to the incoming AC until after 2AM. The primary status displays "*Inverting*" and the secondary status displays "*Time Connect*" to let you know the reason that incoming AC has not connected.

- **Auto Connect:** Automatically connects to incoming AC power when the incoming AC is qualified by the inverter/charger (voltage is below the high AC input requirements, above the SETUP button's *03B Low VAC Dropout* setting, and between 50 Hz to 70 Hz for domestic models; 40-60 Hz for export models).

  Info: The *Auto Connect* setting must be selected if the incoming AC source is a generator. There is no benefit from using the *AC In* feature if the AC source is from a generator—the generator power may not be available if an *AC In* feature is activated. Also, when the generator is turned on (autostarted or manually), it may be prevented from connecting because the criteria to allow the AC input to connect (AC In is based on time, VDC, or SOC) may not have been met.

  Note: *This is true unless using an inverter that has two independent AC inputs—one for grid and the other for generator (i.e., MSH4024RE), because the AC In Control features only work with the GRID IN (AC1) input.*

- **Time Connect:** Incoming AC only connects when the time of day is between the *Connect* and *Disconnect* time settings in the SETUP menu's *02C AC In – Time* menu item. See SETUP menu 02C on page 27 for a complete explanation of the *Connect/Disconnect* time menu settings.
- **VDC Connect:** Incoming AC only connects when the DC battery voltage falls below the *Connect* volts setting in the SETUP menu's *02D AC In – Volts DC* menu item. Disconnects from incoming AC when the DC battery voltage rises above the *Disconnect* volts setting, also from the *02D AC In – Volts DC* menu. See SETUP menu 02D on page 28 for a complete explanation of the *Connect/Disconnect* volts menu settings.
- **SOC Connect:** Incoming AC only connects when the battery bank SOC falls below the *Connect* setting in the SETUP menu's *02E AC In – SOC* menu item. Disconnects from incoming AC when the battery bank SOC rises above the *Disconnect* setting, also from the *02E AC In – SOC* menu. This feature requires the optional ME-BMK (battery monitor) to be installed. See SETUP menu 02E on page 28 for a complete explanation of the *Connect* SOC menu settings.

  Info: If *SOC Connect* is selected and the incoming AC connects, the router issues a one-time "Start Bulk" command to the inverter/charger. This ensures the charger enters the Bulk/Absorb charge cycle regardless of battery voltage.

- **AC In – Disabled:** Disconnects incoming AC when selected. This setting prevents the incoming AC from connecting to the inverter/charger.

CTRL: 02 Charger Control

The *02 Charger Control* menu enables you to set the charge mode to *Multi-Stage*, *Start Float*, or to *Start Bulk*. Most of the time the charger should be left in the *Multi-Stage* setting, but to override this setting use the CTRL button and the 02 *Charger Control* menu. The charger can be forced to start the Float or Bulk charge mode using the *Start Float* or *Start Bulk* settings.

- **Multi-Stage:** This charge profile causes the charger to automatically operate thru the multi-stage (Bulk, Absorption, and Final Stage) charge cycles. When AC is connected and the charge mode begins[1], the inverter's battery voltage is monitored to determine the charging stage. If the battery voltage is low (≤12.8 VDC/12-volt models, ≤25.6 VDC/24-volt models, or ≤51.2/48-volt models), the charger begins Bulk Charging. If the battery voltage is high (≥12.9 VDC/12-volt models, ≥25.7 VDC/24-volt models, or ≥51.3/48-volt models), the charger skips the Bulk and Absorb charge stages and goes directly to the final charge stage (*Multi-Stage*, *Float*, or *Silent*) as selected in the *SETUP: 03F Final Charge Stage* menu item.
  Note[1] *– If the* SETUP: 03C Battery Type *selection is* CC/CV*, once AC connects and the charge mode begins, the charger enters the Constant Current charge mode. If the* CTRL: 01 AC In Control *setting is "*SOC Connect*," or if the* SETUP: 03D Absorb Done *setting is "*SOC*", then the charger enters the Bulk Charge mode once AC is connected and charging begins.*
- **Start Float:** This selection restarts the Float charge cycle from any stage in the charge cycle as long as the charger is active.

  Info: The *Start Float* selection automatically defaults back to the *Multi-Stage* setting once the inverter/charger status displays "*Float Charging*" (or "*Silent*" if battery type *CC/CV* is selected).

  Info: If battery type *CC/CV* is chosen, the *Start Float* selection transfers the charger to Silent mode—unless "*Hold CV Chg Volts*" is selected, then the charger enters the Constant Current charge mode.
- **Start Bulk:** This selection restarts the Bulk charge cycle from any stage in the charge cycle as long as AC is present and the charger is active. The *Start Bulk* selection is useful when a full multi-stage charge cycle does not bring the specific gravity of the batteries to the proper level.

  Info: After *Start Bulk* is selected and activated, the *02 Charger Control* selection automatically returns back to the *Multi-Stage* setting.

  Info: If the current charge mode is Bulk or Absorption, and *Start Bulk* is selected, "*Already in Bulk/Abs*" displays on the router.

  Info: If battery type *CC/CV* is chosen, and the charger is in Silent charge mode, the *Start Bulk* selection transfers the charger to Constant Current mode.

  Info: If you have to continually restart the bulk cycle in order to bring the batteries to full charge, check the settings from the *SETUP: 03 Charger Setup* menu to ensure the batteries are fully charged at the end of a regular multi-stage charge cycle.

CTRL: 03 Gen Control

03 Gen Control is used for controlling a standby generator that is connected to the system and using the optional ME-AGS-N module. For information on these settings, refer to Section 8.2.1.

CTRL: 04 ARTR Aux Relay

The Aux Relay can be programmed to open or close based on the inverter's battery voltage, the battery's state of charge (SOC), or used to indicate an inverter fault has occurred.

Note: *Options include: Force Open (default setting), Force Closed, Auto VDC, Auto VDC (BTS Comp), Auto Fault, and Auto SOC.*

Info: When the relay is open (de-energized), the router's Aux Relay LED (yellow) is off. When the relay closes (energized), the relay's LED is on.

- **Force Open** – Manually forces the router's Aux Relay contacts to stay open. This setting manually controls the device connected to the relay, or can be used to test relay operation.
- **Force Closed** – Manually forces the router's Aux Relay contacts to stay closed. This setting manually controls the device connected to the relay, or can be used to test relay operation.

  This setting also allows the router's Aux Relay to be forced closed and to stay closed until the open setting [under the *Auto VDC*, *Auto VDC (BTS Comp)* or *Auto SOC* setting] is reached.

  Normally, the router's Aux Relay is open until the closed setting is reached. However, if *Forced Closed* is selected first, and then:

  – *Auto VDC* or *Auto VDC (BTS Comp)* is selected—if the battery voltage is between the open and close settings after *Auto VDC* or *Auto VDC (BTS Comp)* is selected, the relay stays closed until the VDC open setting (and any delay time) is reached.

  – *Auto SOC* is selected—if the SOC value is between the open and close settings after *Auto SOC* is selected, the relay stays closed until the SOC open setting is reached.

  Info: When the *Force Open* or *Force Closed* options are selected, the router's Aux Relay opens or closes without any time delay.

- **Auto VDC** – Automatically activates the router's Aux Relay based on adjustable DC voltage settings under the *SETUP: 01F ARTR Aux Relay* menu. The relay uses the *Close Volts* and *Open Volts* settings to close and open based on a low or high DC voltage, and allows the relay to be configured to activate either as an "active high" or "active low" type relay. This relay also uses the *Close Delay* and *Open Delay* settings to automatically control the relay's open and close delay times. (Refer to the *SETUP: 01F ARTR Aux Relay* menu on pages 24-25 for more information on these settings.)
- **Auto VDC (BTS Comp)** – Same as the *Auto VDC* setting. However, it compensates the voltage settings based on the battery temperature reading when the BTS (Battery Temp Sensor) is used.

  Example: The Open Volts setting is 26.2, the Close Volts setting is 25.1, and the BTS temperature is 50°F/10°C (a voltage compensation of +0.9 volts*****). In this scenario, the router's Aux Relay opens when the actual battery voltage is 27.1 (26.2 + 0.9) and closes when the actual battery voltage is 26.0V (25.1 + 0.9).

  ***** – Refer to the "BTS Temperature to Charge Voltage Change" chart in your inverter owner's manual.

  Info: When the router's Aux Relay automatically activates using the *Auto VDC* or *AUTO VDC (BTS Comp)* setting, the DC voltage is based on the DC voltage reading from the System Home screen.

- **Auto Fault** – This setting causes the router's Aux Relay to stay open during normal operation, but closes when an inverter/charger fault is detected (see Section 5.3.4 "Fault Mode Messages" for a list of inverter/charger faults).

  Note: *The router's Aux Relay re-opens when the fault is cleared.*
- **Auto SOC** – Automatically activates the router's Aux Relay based on adjustable SOC settings under the *SETUP: 01G ARTR Relay SOC* menu. The relay uses the *Close* and *Open* SOC settings to close and open based on the battery SOC, and allows the relay to be configured to activate either as an active high or active low type relay. (Refer to the *SETUP: 01G ARTR Relay SOC* menu on page 25 for more information on these settings.)

  Info: The Auto SOC feature requires the optional ME-BMK (battery monitor) to be installed.

CTRL: 05 PT Control

The *PT Control* menu is used for determining how the PT-100 controller charges the battery bank, how the PT Aux Relay(s) function, and how often you want the PT to sweep for the MPPT. For information on these settings, refer to Section 12.2.1.

3.3.3 METER Button and Menus

The METER button gives you access to the various meters which help determine the status of the inverter/charger and battery system.

Info: Depending on the inverter, some meter functions may not be accessible. Refer to Appendix B for more information.

Info: The displays automatically return to the System Home screen five minutes after the last button push, except when using the METER button. Menus selected under the METER button stay and do not return to the home screen, this is useful for displaying commonly used meter readings.

Info: Pressing and holding down the METER button (~2 seconds) takes you back to the System Home screen from any menu.

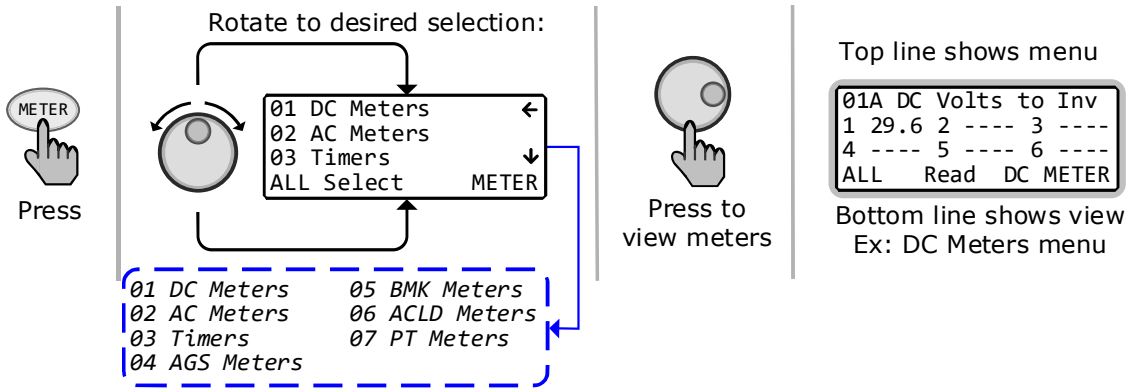

Figure 3-5, METER Button and Menus

METER: 01 DC Meters

The *DC Meters* menus display battery voltage to the inverter and DC amps to/from the batteries. Use these meters to monitor your battery bank.

- **01A DC Volts to Inv:** This meter displays the battery voltage connected to each inverter. The accuracy is ±1.5% with a 0.1 VDC resolution.
- **01B Inv/Chg DC Amps:** This meter displays the inverter (–) or charger amps (+) and is shown as a DC value. A negative number indicates the inverter is powering the inverter loads and shows how much current is being removed from the battery (inverter amps). A positive number indicates the amount of current delivered to the batteries (charger amps) from the AC input source. This meter converts AC amps to display DC amps, so the accuracy below one amp AC (~10 amps DC @ 12 VDC) is not detected. When the current in or out of the batteries is greater than one amp AC, the accuracy of this meter is ±20%.

METER: 02 AC Meters

- **02A AC Output Volts:** This meter displays the AC voltage at the inverter's output terminals. If inverting, the inverter's output voltage is displayed[1]. If in Standby mode, the voltage that is passing through the inverter from the AC input source (i.e., grid or generator) is displayed.

  MS-PAE Series (240 VAC output): Even though MS-PAEs provide 240 volts, this meter displays the AC output voltage as a nominal 120-volt value. It is calculated by adding the voltage from each hot out (i.e., HOT 1 to NEUTRAL and HOT 2 to NEUTRAL) and dividing by two.
- **02B AC Output Hz:** While inverting, this meter displays the output frequency of the inverter. When in Standby mode, this meter displays the frequency of the incoming AC source (i.e., grid or generator) that is passing through the inverter to the inverter's output terminals. The frequency value is shown in Hertz (Hz).

Note[1]: *Accurate only when using a pure sine wave inverter.*

MS-PAE (menus 02C-02G) or MSH models only (menus 02C-02I):

- **02C System AC Amps:**

  AC Load: This meter is the sum of the values from the *02E AC Load Amps* menu for each inverter connected in parallel (i.e., MS-PAE or PE Series). See the *02E AC Load Amps* section for more information on how the AC load amps value is determined.

  AC Input: This meter is the sum of the values from the *02F AC Input Amps* menu for each inverter connected in parallel (i.e., MS-PAE or PE Series). This reading is always displayed as a positive (+) number. See the *02F AC Input Amps* section for more information on how the AC input amps value is determined.

- **02D Inv/Chg Sys Amps (In/Out of Battery):** This meter is the sum of the values from the *02G Inv/Chg AC Amps* menu for each inverter connected in parallel (i.e., MS-PAE or PE Series). See the *02G Inv/Chg AC Amps* section for more information on how the inverter and charger AC amps value is determined.

- **02E AC Load Amps:** This meter displays the total AC current delivered to the loads on the inverter's AC output terminals. The *Load Amps* value is positive (+) showing power is being pulled from the inverter to run an AC load—either using the batteries in Inverter mode, or from the AC input source in Standby mode.

  When I look at the Loads Amps display on a router, how is this value calculated?
  For MSH Series inverters: The *Load Amps* is determined by subtracting the input current value (*02F AC Input Amps*) from the current charging the battery (*02G Inv/Chg AC Amps*).
  ◇ Inverter Mode example: 0A (input amps) minus – 10A (inverter amps) = 10A (load amps), see Figure 3-6. A Load Amps of 10A means 10A x 120V = 1200W load on the inverter.
  ◇ Standby Mode example: 20A (input amps) minus 10A (charger amps) = 10A (load amps), see Figure 3-7. A Load Amps of 10A means 10A x 120V = 1200W load on the inverter.
  ◇ Load Support Mode example: 10A (input amps) minus – 10A (inverter amps) = 20A (load amps), see Figure 3-8. A Load Amps of 20A means 20A x 120V = 2400W load on the inverter.

  For MS-PAE and MS-PE Series inverters: The *Load Amps* value is shown as 120VAC current, even though there may be 240VAC loads, and is calculated differently based on the mode.
  ◇ When in inverter mode, the *Load Amps* value is the sum of all the 120V currents from both HOT 1 and HOT 2 outputs.
  Example: If I have a 5A @ 120V load on the HOT 1 output, a 15A @ 120V load on the HOT 2 output, and a 2A @ 240V load on the HOT 1 and HOT 2 outputs; what would the *Load Amps* menu display? The display shows 24A, which is the 120V equivalent current. Calculated as:
  ☐ AC1 to Neutral = 5A @ 120V ☐ AC2 to Neutral = 15A @ 120V
  ☐ AC1 to AC2 = 2A @ 240V (2A @ 120V + 2A @ 120V)
  Load Amps value = sum all 120V currents (5A+15A+2A+2A) = 24A (24A x 120V = 2880W)
  ◇ When in Standby mode, the *Load Amps* value is determined by subtracting the input current value (*02F AC Input Amps*) from the current charging the battery (*02G Inv/Chg AC Amps*).
  Example: 20A (input amps) minus 10A (charger amps) = 10A (load amps), see Figure 3-7. A Load Amps display of 10A means 10A x 120V = 1200W load on the inverter.

- **02F AC Input Amps:** This meter displays the total AC amps being used by the inverter for charging and for any load connected to the output of the inverter. This reading is always displayed as a positive (+) number.
  Example: If the charger is delivering 20A to the battery from the AC source and the load connected to the inverter output is using another 10A, the combined load on the incoming AC source is 30A. So the input amps would display 30A.

- **02G Inv/Chg AC Amps:** This menu displays the inverter or charger amps and is shown as an AC value. A negative (–) amps reading indicates the inverter is powering the inverter loads and the batteries are discharging (inverter amps). A positive (+) amps reading indicates the inverter is using the AC input source to charge the batteries (charger amps).

MSH models only:

- **02H Input Volts AC1:** This menu displays the RMS value of the AC voltage at the inverter's AC1 and NEUTRAL input terminals.

MSH-RE models only:

- **02I Input Volts AC2:** This menu displays the RMS value of the AC voltage at the inverter's AC2 and NEUTRAL input terminals.

Info: The *02I Input Volts AC2* menu only displays if the router is connected to a dual source inverter/charger that has an AC1 and AC2 input, such as the MSH4024RE.

Info: If the *02I Input Volts AC2* menu displays voltage (~ 50v), but the generator is off or nothing is connected to the AC2 input, the AC2 neutral-to-ground bond connection is not correct or not connected.

METER: 03 Timers

- **03A Charge Time:** This meter displays the total time the charger is holding the batteries at a high voltage level. The timer counts while in Bulk, Absorption, or Equalization charge stages (or in the Constant Current and Constant Voltage charge stages if *CC/CV* is selected under the *SETUP/03C Battery Type* menu). The meter does not accumulate time when in Float, Charger Standby, Full, or Silent mode. The charge timer resets whenever the charge status goes to "Charging" (AC is connected to the inverter/charger), or the charger initiates another Bulk, EQ, or Constant Current charge cycle.

Info: The *03A Charge Time* value displayed is used by the Max Charge Time safety feature to determine when to display "*Max Charge Time*" and blink CHG LED indicator.

Info: The Max Charge Time safety feature is set and enabled based on the battery type that is selected under the *SETUP/03C Battery Type* menu:
a) If the battery type is '*CC/CV*' – the *Set Max CC/CV Charge Time* setting is available to set after the *CV Chg Done Time* (or *Amps*) is selected under the *SETUP/03C Battery Type: CC/CV* menu.
b) If the battery type is not '*CC/CV*' – the *SETUP/03E Max Charge: Time* menu is available to set the maximum charge time.

- **03B Days Since:**

  ◇ **Absorb/CV Done** – This menu displays the number of days since the Absorption charge mode was completed (i.e., *Absorb Done – Time, Amps, or SOC*). This menu resets to zero once an Absorb Done is completed as per the *SETUP: 03D Absorb Done* setting.

Info: The *03B Days Since: Absorb/CV Done* timer resets to zero once an Absorb Done is completed as per the *SETUP: 03D Absorb Done* setting; or, the Absorption Charge mode is finished prematurely by starting another charge mode—such as enabling a Start Float charge (using *CTRL: 02 Charger Control/Start Float*).

  ◇ **EQ Chg Started** – This menu displays the number of days since the EQ charge mode has been enabled. This menu resets to zero once equalization has started. The *SETUP: 01I Days to remind when to EQ* menu uses the time shown in this menu to determine when to indicate it is time to perform an equalization charge to the batteries.

METER: 04 AGS Meters

Refer to Section 8.2.3.1 for information on all AGS menus available from the METER button.

METER: 05 BMK Meters

Refer to Section 9.2.2 for information on all BMK menus available from the METER button.

METER: 06 ACLD Meters

Refer to Section 11.2.1 for information on all ACLD menus available from the METER button.

METER: 07 PT Meters

Refer to Section 12.2.2.1 for information on all PT menus available from the METER button.

INVERT MODE

Current from the battery is used by the inverter to power the inverter's AC loads.

Example below:

- Current to inverter input (AC Input) = 0 Amps AC
- Current from battery (Inv/Chg Amps) = -10 Amps AC
- Current to power the AC loads (AC Load) = 10 Amps AC

```
02B AC Amps:
AC Load     =  10 AAC
AC Input    =   0 AAC
P1     Read  AC METER
```

```
02C Inv/Chg Amps
 (In/Out of Battery)
      -10 Amps AC
P1     Read  AC METER
```

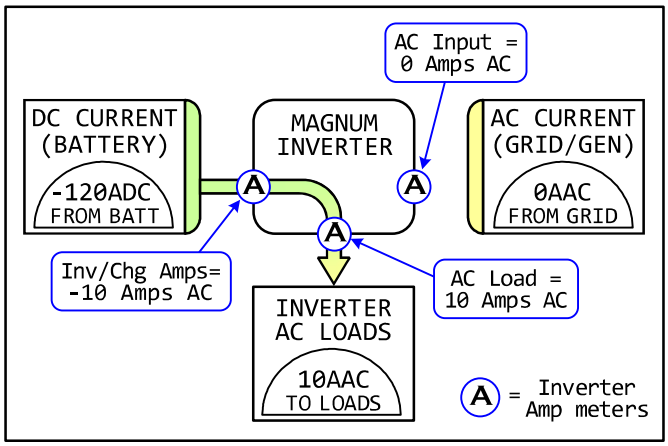

Figure 3-6, Current Flow – Inverter Mode

STANDBY MODE

Current from the grid/generator to the inverter's AC input is used to power the inverter's AC loads and to charge the battery.

Example below:

- Current to inverter input (AC Input) = 20 Amps AC
- Current to power the AC loads (AC Load) = 10 Amps AC
- Current to charge battery (Inv/Chg Amps) = 10 Amps AC

```
02B AC Amps:
AC Load     =  10 AAC
AC Input    =  20 AAC
P1     Read  AC METER
```

```
02C Inv/Chg Amps
 (In/Out of Battery)
      10 Amps AC
P1     Read  AC METER
```

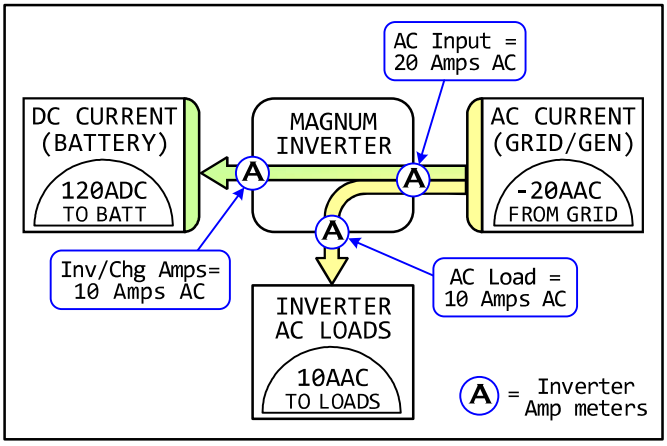

Figure 3-7, Current Flow – Standby Mode

LOAD SUPPORT MODE
(MSH Series Only)

The MSH Series uses current from the battery to assist in powering the inverter's AC loads and to reduce the current from the grid/generator.

Example below:

- Current to inverter input (AC Input) = 10 Amps AC
- Current to power the AC loads (AC Load) = 20 Amps AC
- Current from battery (Inv/Chg Amps) = -10 Amps AC

```
02B AC Amps:
AC Load     =  20 AAC
AC Input    =  10 AAC
P1     Read  AC METER
```

```
02C Inv/Chg Amps
 (In/Out of Battery)
      -10 Amps AC
P1     Read  AC METER
```

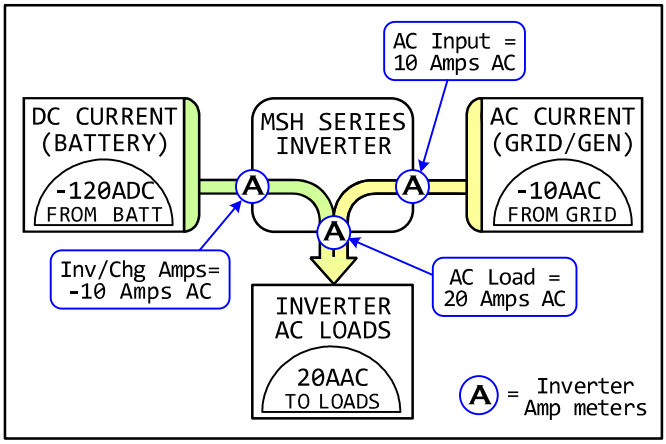

Figure 3-8, Current Flow – Load Support Mode

3.3.3.1 Additional METER Menus for Port-connected Inverters

The METER button also provides meter displays for each active port-connected inverter (or accessory) in your system. These displays are similar to those in Section 3.3.3, but the displayed information is specific to the particular inverter and/or model (Figures 3-9 & 3-10 below).

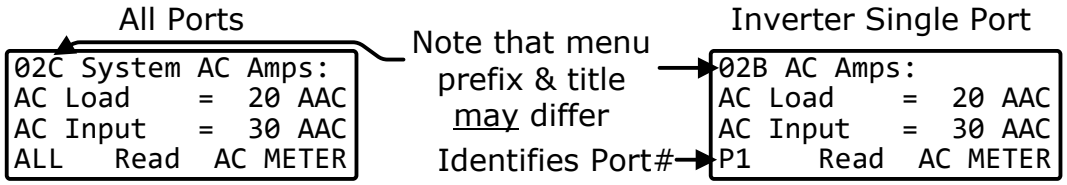

Figure 3-9, ALL Ports vs Port-specific METER Menus

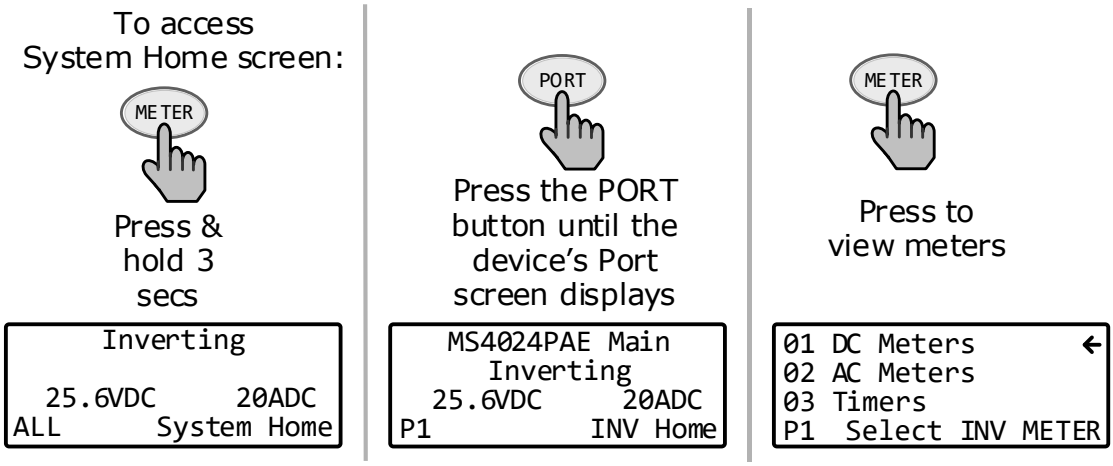

Figure 3-10, Accessing Port-specific METER Menus

Port-specific Inverter METER Menus

The following METER menus are available for each port-connected inverter. Information is for the specific selected inverter (versus ALL-Port meters that are system meter information).

METER: 01 DC Meters

- **01A DC Volts to Inverter:** See information for *01A DC Volts to INV* menu in previous section.
- **01B Inv/Chg DC Amps (In/Out of Battery):** See information for *01B Inv/Chg DC Amps* menu in previous section.

METER: 02 AC Meters

- **02A AC Output:** See information for *02A AC Output Volts* and *02B AC Output Hz* menus in previous section.
- **02B AC Amps:** See information for *02C System AC Amps* menu in previous section.
- **02C Inv/Chg Amps (In/Out of Battery):** See information for *02D Inv/Chg Sys Amps (In/Out of Battery)* menu in previous section.
- **02D AC Input Volts:** See information for *02H Input Volts AC1* menu in previous section. ***Note:*** *For a MSH-RE model inverters only, this menu also displays input volts for the AC2 source as well (02I Input Volts AC2). Refer to menu maps in Figure 4-2.*

METER: 03 Timers

- **03A Charge Time:** See information for *03A Charge Time* menu in previous section.

  03B Days Since: See information for *03B Days Since* menu in previous section.

3.3.4 SETUP Button and Menus

Pressing the SETUP button provides access to the menu items and settings that enable you to configure the router display, the inverter/charger, a ME-AGS-N, and a ME-BMK. Review each menu item to determine if you need to adjust any settings to meet your system requirements.

Info: The first screen that may appear when the SETUP button is pushed is a password screen. If the PIN has been set under the TECH button's *06 SETUP PIN* menu, the first screen is the *Set SETUP PIN* menu. The proper PIN must now be entered in order to access the SETUP menus. After five minutes from the last button push, the display automatically returns to the System Home screen and the PIN must be reentered in order to access the SETUP menus. Refer to the TECH button's *SETUP PIN* menu to set or change the PIN number.

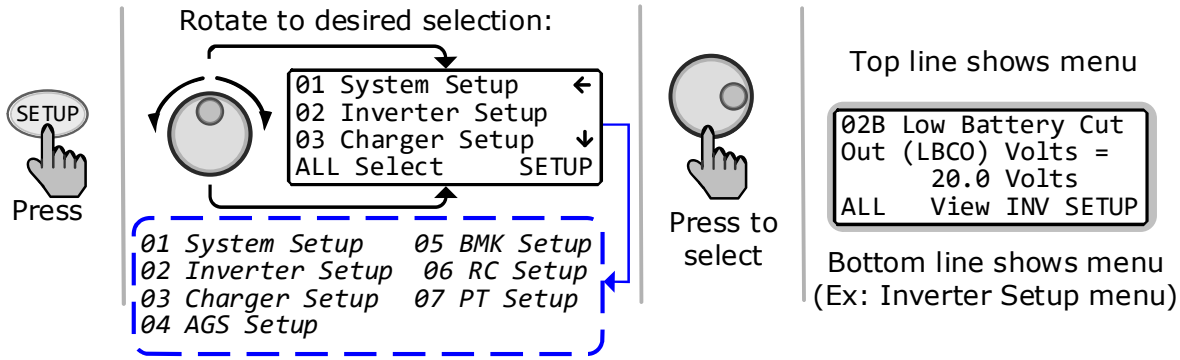

Figure 3-11, SETUP Button

SETUP: 01 System Setup

The following menus are used to set up the router clock and screen.

- **01A System Clock/Date:** The router's real time clock must be set for proper operation of some features—such as: the SETUP button's *02C AC In – Time*, *04B Gen Run Time*, *04G Gen Quiet Time*, *04H Gen Exercise* menus, and the TECH button's *05 Fault History* menu items.

****IMPORTANT****

It is very important that you set the time clock and date as they are a critical piece in knowing when fault issues occur, viewing PT data history, as well as for the proper start/stop functions of your AGS device, if installed.

Info: If the router is disconnected from the inverter, the clock and date settings will need to be reset.

To Set the Current Time (HH:MM AM or PM)

From the *Set System Clock* menu:

1. Rotate the SELECT knob to the hour of day, and then press SELECT.
2. Rotate the SELECT knob to the correct minute setting, and then press SELECT.
3. Rotate the SELECT knob to the appropriate AM or PM setting, and then press SELECT.

To Set the Current Date (MM/DD/YY)

From the *Set Current Date* menu:

1. Rotate the SELECT knob to the current month, and then press SELECT.
2. Rotate the SELECT knob to the current day, and then press SELECT.
3. Rotate the SELECT knob to the current year, and then press SELECT.

- **01B Screen Setup:** This setting adjusts the contrast and brightness of the LCD screen to accommodate the current lighting conditions and viewing angle.

  Default settings: *Contrast = 50%*, *Brightness = 50%*

  Range: *0-100%*

Info: If DC power is lost to the router, the *01B Screen Setup* setting defaults back to the default settings (*Contrast = 50%, Brightness = 50%*).

- **01C Power Save:** This setting turns off the *Power Save*™ feature, or you can select a duration of time (from 1 to 60 minutes) that determines when the display goes into Power Save mode. This setting also allows the Port LEDs to be turned "*OFF,*" or set to "*Auto*" mode. If you want the Port LEDs to always be off, you need to set the Port LEDs to *OFF*. In Auto mode, the Port LEDs automatically blink whenever a device is communicating to a router port.
  Default settings: *PowerSave [Min] = 15 Min*, *Port LEDs = Auto*
  Range: *PowerSave = OFF, 1-60 Min; Port LEDs = Auto, OFF*

What is the Power Save feature? This feature turns off the router's LCD backlight and LEDs to conserve energy. The router enters Power Save mode if there hasn't been a button press or fault message for a set period of time (per *minutes* setting). When in Power Save mode, the router's LCD backlight and LEDs can be reactivated by pressing any button. If a fault occurs during Power Save mode, the LCD backlight and FAULT LED come on and stay on as long as the fault is present.

Info: If you want the LCD backlight and LEDs to always be on (while communicating), the *PowerSave [Min]* setting must be *OFF* and the *PORT LEDs* set to *Auto*.

Info: Pressing the SELECT knob causes the router to exit Power Save mode. However, rotating the SELECT knob does not cause the router to come out of Power Save mode.

- **01D Temp Display:** This menu item selects whether to display temperatures in Fahrenheit or Celsius. Once you select either Fahrenheit or Celsius, the following menu items are affected by this selection: the METER button's *04D AGS Temp* menu, the SETUP button's *04E Gen Run Temp* menu, and the TECH button's *01 INV Temperatures* menu.
  Default setting: *Fahrenheit*
  Range: *Fahrenheit, Celsius*
- **01E Viewing Ports:** The *Viewing Ports* menu item sets the device "home" screen (i.e., Port Home) to either automatically scroll through each active/connected port, or requires you to manually select each port. Selecting and adjusting the *seconds* enables the *Auto Scroll* feature and allows you to determine how long each active device home screen (under the PORT button) is displayed before it automatically scrolls to the next active "home" screen.
  Default setting: *Auto Scroll [secs] = OFF*
  Range: *Auto Scroll = OFF, 1-60 secs*

  Info: Once the *Auto Scroll* feature is enabled, the active "home" screen menus under the PORT button begin auto-scrolling after one minute of inactivity (i.e., no button push or pressing the SELECT knob).

  Info: Rotating the SELECT knob pauses the display's auto-scrolling. Once the SELECT knob is no longer rotated, auto-scrolling resumes—it does not require another minute of inactivity to resume auto-scrolling.
- **01F ARTR Aux Relay:** The router's Aux Relay becomes a battery voltage-controlled relay when *Auto VDC* or *Auto VDC (BTS Comp)* is selected from the *CTRL/04 ARTR Aux Relay* menu. Use the following settings to open/close on DC volts with an adjustable delay.

  ◇ **Open Volts** – The battery voltage trip point at which the router's Aux Relay contacts open. This setting can be below or above the *Close Volts* setting, depending on if you want the relay to be active low or active high.

  ◇ **Close Volts** – The battery voltage trip point at which the router's Aux Relay contacts close. This setting can be below or above the *Open Volts* setting, depending on if you want the relay to be active low or active high.
  Default settings: *Open Volts = 10.0 VDC (12v), 20.0 VDC (24v), 40.0 VDC (48v);*
  Close Volts = 14.0 VDC (12v), 28.0 VDC (24v), 56.0 VDC (48v)
  Range: *Open & Close Volts = 8.0-17.0 (12v), 16.0-34.0 (24v), 32.0-68.0 VDC (48v)*

Example – Active Low: Set *Close Volts* below *Open Volts* voltage. If the *Close Volts* voltage is set at 24.0 VDC and the *Open Volts* voltage is set at 29.0 VDC, the relay closes when the battery voltage drops to 24.0 VDC and opens when the battery voltage rises to 29.0 VDC. Use this configuration to control a battery exhaust fan, or as a simple PV charge controller.

Example – Active High: Set Close Volts above the Open Volts voltage. If the *Open Volts* voltage is set at 24.0 VDC and the *Close Volts* voltage is set at 29.0 VDC, the relay opens when the battery voltage drops to 24.0 VDC and closes when the battery voltage rises to 29.0 VDC. Use this configuration to control a low voltage disconnect circuit for a DC load.

- **Open Delay** – Delays the opening of the Aux Relay contact once the battery voltage trip point has been reached. This sets a hysteresis so the Aux Relay does not cycle unnecessarily.
- **Close Delay** – Delays the close of the Aux Relay contact once the battery voltage trip point has been reached. This sets a hysteresis so the Aux Relay does not cycle unnecessarily.

Default settings: *Open & Close Delay = 10 secs*
Range: *OPen & Close Delay = 0-127 secs,* then *1-127 mins*

Info: The *Open/Close Volts* and *Open/Close Delay* settings are only available if the *Auto VDC* or *Auto VDC (BTS Comp)* options have been selected from the *CTRL: 04 ARTR Aux Relay* menu.

Example: The Aux Relay set to *Auto VDC*. The *Open Volts* = 29.0 VDC and the *Close Volts* = 24.0 VDC, and the *Open Delay* and *Close Delay* settings are set to 10 seconds.

When the battery voltage reaches 24.0 VDC, after a 10-second delay the Aux Relay closes and the LED illuminates. When the battery voltage reaches 29.0 VDC, after a 10-second delay the Aux Relay opens and the Aux Relay LED indicator turns off.

- **01G ARTR Relay SOC:** The ARTR Aux Relay becomes a battery SOC-controlled relay when *Auto SOC* is selected from the *CTRL/04 ARTR Aux Relay* menu. It can be programmed to open or close on the battery's State of Charge using the following settings.
  Note: *Requires a ME-BMK Battery monitor to provide SOC values to the inverter. If BMK not installed,* "No BMK Present" *displays.*
  - **Open** – The battery SOC trip point at which the Aux Relay contacts open. This setting can be below or above the *Close* setting, depending on if you want the Aux Relay to be active low (i.e., set *Open* below *Close*) or active high (i.e., set *Open* above *Close*).
  - **Close** – The battery SOC trip point at which the Aux Relay contacts close. This setting can be below or above the *Open* SOC setting, depending on if you want the ARTR Aux Relay to be active low (i.e., set *Open* below *Close*) or active high (i.e., set *Open* above *Close*).

  Default settings: *Open = 50%; Close SOC = 100%*
  Range: *Open and Close = 20-100%*

  Info: The *METER: 05 BMK Meters/05A BMK SOC* meter must have a valid SOC number for the ARTR Relay to determine when to start and stop based on the battery SOC. Under the *METER/05 BMK Meters/05A BMK SOC* menu, *Think'n*, *No Comm*, or any BMK fault (i.e., *Factory Fault*, *Power-up Fault*, or *Unknown Fault ##*) are not valid SOC numbers.

- **01H Max System Charge Amps:** This menu setting is the maximum current allowed to charge the batteries during Bulk, Absorption, Float, and Equalize charging; and is provided to limit the charge amps.
  Note: *If "CC/CV Controlled" displays on this menu's screen, you will not be able to adjust the settings as "CC/CV" has been selected as the battery type from the 03C Battery Type menu.*

  Default setting: *Disabled*
  Range: *Disabled, 20-2500ADC*

  Info: If the BMK (Battery Monitor Kit) is connected, the DC amps value determined by the BMK (under *METER: 05C DC Amps-BMK*) will be used by the *Max Chg Amps* setting instead of the inverter's DC calculated current (shown under *METER: 01B Inv/Chg DC Amps*)—as it is more accurate (+/ – .1 ADC).

- **01I Days to remind when to EQ:** This menu sets the number of days that must pass before the router will remind you to equalize your batteries.

  Note: *Depending on type of battery selected, EQing may not be allowed. If this is the case, "EQ not allowed in this battery type" appears on the display.*

  Default setting: *OFF*
  Range: *OFF, 1-255 Days*

  Info: Once equalizing begins, the METER: 03B Days Since: EQ Chg Started timer resets to zero days.

- **01J Link PT Charge Settings:** This menu is used to link the PT charging settings (*07A Battery Type* and *07B Absorb Done)* with the inverter's charger settings (*03C Battery Type and 03D Absorb Done Time*). When linked, the inverter's charger settings are used to determine how the inverter/charger and the PT controller will charge the battery.

  Default setting: *YES*
  Range: *YES, NO*

  Note: *If* "YES*" is selected, the link feature is enabled and the PT charging settings (*07A Battery Type *and* 07B Absorb Done*) display* "Linked*," and are locked and prevented from being adjusted.*

SETUP: 02 Inverter Setup

The following menus (02A – 02D) are used to set up only the functions related to the Inverting mode of the inverter/charger.

- **02A Search Watts:** Allows turning off the *Search Watts* feature or adjusting the power level to determine when the inverter leaves Search mode. If not needed, select *Sensitivity = OFF*. When search is turned off, the inverter continuously provides full AC voltage to the loads.

  Default setting: *Sensitivity = 5 Watts*
  Range: *OFF, 5-50 Watts*

  Info: When the *Search Watts* feature is active, "*Searching*" appears on the top line of the LCD display and the green INV LED will flash.

What is the Search Watts feature? This feature is used to help save battery power by reducing the inverter's output to search pulses when there is no detectable load. If a load greater than the wattage level setting turns on while the inverter is 'searching', the inverter will start 'inverting' to provide full voltage on its output.

Should I use the Search Watts feature? If the inverter can spend a great deal of time searching (to reduce the power drain on your batteries) and you can tolerate small loads (less than 5 watts) being off, then the Search mode feature should be used. However, if some small loads (e.g., digital clocks, satellite receivers, answering machines, etc.,) are required to be on, then this feature should be turned off (*Sensitivity = OFF*).

Where should I set Search Watts? The *Search Watts* setting should be adjusted to the same power level (or the next lower setting) of the smallest load that you plan to run. If you don't know the wattage of the smallest load, turn the switch for the load on and decrease the *Search Watts* setting until the load comes on <u>and stays on</u>.

Info: Even with *Search Watts* on, some connected equipment— even if turned off—may draw enough current to keep the inverter in the Inverting mode (i.e., not "searching").

- **02B Low Battery Cut Out:** The *Low Battery Cut Out* (LBCO) menu sets the DC voltage level that turns off the inverter. This helps protect the batteries from over-discharge damage. If the battery voltage drops below the LBCO set-point continuously for more than 1 minute, the FAULT LED comes on, the inverter turns off, and the display shows a '*Low Battery*' status.

  If the battery voltage falls below 8.5 volts (12-volt models), 17.0 volts (24-volt models) or 34.0 (48-volt models), the FAULT LED and '*Low Battery*' status indications will be immediate.

  Default settings: *LBCO Volts = 10.0 VDC* (12v), *20.0 VDC* (24v), *40.0 VDC* (48v)
  Ranges: *9.0-12.2 VDC* (12v), *18.0-24.4 VDC* (24v), *36.0-48.8* VDC (48v)

Where should I set the LBCO setting? If your goal is to not discharge your batteries more than 20%*, then set the *LBCO* from 11.5 to 12.2 VDC (12-volt models), 23.0 to 24.4 VDC (24-volt models), or 46.0 to 48.8 (48-volt models). In some applications, such as those installed in an off-grid home or when doing a lot of RV dry-camping, you may want to cycle down to 50%* by setting the LBCO from 10.0-11.4 VDC (12-volt models), 20.0-22.8 VDC (24-volt models) or 40.0-45.6 VDC (48-volt models). In extreme circumstances, you have the ability to discharge the batteries to 80%* by setting the LBCO to 9.0-9.5 VDC (12-volt models), 18.0-19.0 VDC (24-volt models), or 36.0-38.0 VDC (48-volt models) before recharging.

** These are rough estimates. For accurate battery monitoring, use the ME-BMK battery monitor.*

Info: The higher the LBCO setting, the less the inverter discharges the batteries; which allows the batteries to have a longer life. The down side to a higher LBCO setting is that you need to charge more often to prevent the inverter from shutting off in Fault mode.

****IMPORTANT****

1. To use the *AC In Control* features (*AC In – Time*, *AC In – Volts DC*, and *AC In – SOC*), the AC source must always be connected and available for use at the inverter's AC input—such as utility power. There is no benefit from using the *AC In* feature if using a generator, because the generator power may not be available when the *AC In* feature becomes activated.
2. When an *AC In* feature (*AC In – Time*, *AC In – Volts DC*, or *AC In – SOC*) is selected, that feature is active whether or not there is any AC power on the inverter's input. If no AC power is available, the inverter continues in Inverter mode. However, if AC power becomes available on the inverter's input after the connect setting (*Time*, *VDC*, or *SOC*) has been reached, the inverter continues to allow the incoming AC power to be connected and used until the disconnect setting is reached.
3. When using a dual source inverter/charger such as the MSH4024RE, the *AC In* features only work with the GRID IN (AC1) input.

- **02C AC In – Time:** This feature allows you to connect to the local power utility at a predetermined time of day. When the current time falls within the set times, the inverter/charger connects to the AC that is connected to the AC input terminals. Once outside the set times, the inverter/charger disconnects from the AC source.

  ◇ **Connect** – Determines what time each day the inverter/charger allows the incoming AC to connect and transfer the loads from the inverter's battery power to the utility grid.

  Default setting: *6:00AM*

  Range: *12:00AM-11:45PM (15 minute increments)*

  ◇ **Disconnect** – Determines what time each day the inverter/charger disconnects any connected incoming AC, and resumes powering AC loads from the inverter's battery power.

  Default setting: *6:00PM*

  Range: *12:00AM-11:45PM (15 minute increments)*

What is the AC In – Time feature? This feature allows the incoming AC to connect to the inverter/charger and charge the batteries only during the time of day as set in the *02C AC In – Time* menu item. Even if AC is present on the AC input terminals of the inverter/charger, it can only connect during those times previously set. The most common use of AC In – Time is when your local utility company offers peak rate savings (or "time of day billing"). The utility company offers the peak rate savings with a lower rate per kWH (kilo Watt Hour)—usually available at night when there is less demand on the local utility grid. The *AC In – Time* feature may save you money by only connecting to the utility when rates are the least expensive.

Where should I set AC In – Time? Check with your local utility company or installer and see if they offer lower rates at particular times of the day. If a lower rate is offered, try setting your connect/disconnect times to coincide with the utility companies lower rates to save you money.

- **02D AC In – Volts DC:** Based on the inverter's battery voltage, the *AC In – Volts DC* settings determine when the inverter automatically connects and disconnects the incoming utility power.

  ◇ **Connect** – This setting determines at what DC voltage the inverter/charger connects to incoming AC and transfers the loads from the inverter battery power to the utility grid. The transfer occurs only if the battery voltage remains below this setting for 10 seconds.
  Default settings: *11.0 VDC* (12v), *22.0 VDC* (24v), *44.0 VDC* (48v)
  Ranges: *9.0-15.9 VDC* (12v)*, 18.0-31.8 VDC* (24v)*, 36.0-63.6 VDC* (48v)

  ◇ **Disconnect** – Once the inverter has connected to the incoming AC—based on the VDC *Connect* setting—this setting determines at what DC voltage the inverter/charger disconnects from incoming AC and resumes powering the AC loads from the inverter's battery power.
  Default settings: *14.1 VDC* (12v), *28.2 VDC* (24v), *56.4 VDC* (48v)
  Ranges: *9.1-16.0 VDC* (12v)*, 18.2-32.0 VDC* (24v)*, 36.4-64.0 VDC* (48v)

Info: The *02D AC In – Volts DC (Connect and Disconnect)* settings are not temperature-compensated.

Info: If you have a ME-BMK battery monitor, use the *AC In – SOC* feature instead of the *02D AC In – Volts DC* feature. The *AC In – SOC* feature takes temperature compensation into account and is a more accurate way to identify when your battery is discharged/charged—to determine when to transfer to/from utility power.

What is the AC In Volts DC feature? This feature allows the inverter system to automatically switch between utility connected and standalone battery operation—based on the VDC voltage (i.e., battery) to the inverter. When using this feature, the inverter loads are powered from the battery—which is normally charged from an energy source such as solar, wind, and/or hydro. In the event the energy source cannot keep the battery voltage from falling, once the battery voltage drops to the *Connect* volts setting the inverter connects to the utility to continue powering the loads connected to the inverter's output (and to charge the battery). When the energy source can again deliver enough power to raise the battery voltage to the *Disconnect* volts setting, the inverter disconnects from the utility and again powers the inverter loads from the battery.

Where should I set AC In – Volts DC? Check with your battery manufacturer to determine the correct settings for your batteries. Typically, battery manufacturers do not recommend discharging the batteries below 50%, which when related to a voltage setting is approximately 12.0-12.2 VDC, 24.0-24.4 VDC and 48-48.8 VDC for 12, 24 and 48-volt batteries, respectively. In order to protect the batteries from over-discharging, set the connect voltage setting to 12.2 VDC, 24.4 VDC, or 48.8 VDC, respectively.

Set the disconnect voltage setting higher than the absorb voltage setting in order to reduce cycling of the system. A setting higher than the absorb voltage requires the energy source (e.g., solar, wind, etc.,) to raise the DC voltage above the charger settings. This ensures the battery gets at least an 80-85% charge (preferably 100%) before the AC is disconnected and the inverter resumes powering from the batteries.

- **02E AC In – SOC:** This setting determines when the inverter automatically connects and disconnects the incoming utility power based on the SOC of the inverter battery bank.
  Note: *Requires a ME-BMK battery monitor to provide SOC values to the inverter.*

  ◇ **Connect** – This setting determines at what battery SOC% the inverter connects to incoming utility power and transfers the loads from the inverter battery power to the utility grid.
  Default setting: *80% SOC*
  Range: *20-99%*

  ◇ **Disconnect** – Once the inverter has connected to incoming AC—based on the SOC *Connect* setting—this setting determines the battery SOC% at which the inverter disconnects from incoming utility power and resumes powering the loads from the inverter's battery power.
  Default setting: *100% SOC*
  Range: *21-100%*

Info: The transfer to/from incoming AC occurs immediately when the *Connect* SOC or *Disconnect* SOC setting is reached.

Info: A ME-BMK is required in order to use the *2E AC In – SOC* setting. If this setting is selected and there is no ME-BMK installed in the system, or if a valid SOC number is not displayed under the *METER/05 BMK Meters/05A SOC* menu (i.e., *Think'n*, *No Comm*, *Pwr-up Fault* and *Factory Fault* are not valid SOC numbers), then the inverter will not connect to the incoming AC power.

What is the AC In – SOC feature? This feature allows the inverter system to automatically switch between utility connected and standalone battery operation based on the inverter's battery SOC that is provided by the ME-BMK battery monitor. When using this feature, the inverter loads are normally powered from the battery and a solar array (or other energy source such as wind, and/or hydro). In the event the solar array cannot deliver enough power and the battery's SOC drops to the *Connect* SOC setting, the inverter connects to the utility to continue powering the loads connected to the inverter's output and to charge the battery. Once the solar array can again deliver enough power to charge the battery to the *Disconnect* SOC setting, the inverter disconnects from the utility and again powers the inverter loads from the battery.

Where should I set AC In – SOC? Check with your battery manufacturer to determine the correct settings for your batteries. For the *Connect SOC* setting, most manufacturers do not recommend discharging the batteries below 50% to maintain the life of the battery. For the *Disconnect* SOC setting, set it to a value to get at least an 80-85% charge (preferably 100%) before the AC is disconnected and the inverter resumes powering from the batteries.

Info: When using *AC In – SOC*, ensure the *SETUP: 03D Absorb Done* SOC setting is higher than the *Disconnect* SOC setting, or the inverter may not disconnect from the incoming AC because the battery may not be charged to a high enough SOC level to meet the *Disconnect* SOC setting.

1. The *AC In –VDC* and *AC – In SOC* features allow you to optimize the use of another energy source (i.e., solar, wind, and/or hydro), and only allow the use of the utility power when the energy source is not able to keep up with the load demands under normal conditions (e.g., cloudy day).
2. The energy source should be sized to meet the daily power requirements of the loads being operated under normal conditions. Otherwise, the inverter would be connected to utility power most of the time, resulting in excessive energy consumption from the utility.
3. The inverter system should not be configured for use in a utility back-up scenario, otherwise the battery may be in a highly discharged state when grid power goes down—preventing the critical loads from running during a power outage.
4. The incoming AC is normally disconnected from the inverter. The *Connect* setting (VDC or SOC) <u>must be reached</u> before the inverter allows the incoming AC to connect.

- **02F Inverter Always Power-Up When DC is Connected:** Forces the inverter to turn on when DC voltage to the inverter is applied. Allows the inverter to power up and provide AC power automatically once the battery is connected to the inverter.
  Default setting: *NO*
  Range: *YES, NO*

What is the Always Power-Up feature? Normally, when DC power is connected to the inverter, the user is required to press the inverter's or the router's power button to turn on the inverter. If the *Always Power-Up* feature is activated by selecting "*YES*", then whenever DC power is connected, the inverter is automatically turned on and starts searching or inverting—depending on the SETUP button's *02 Inverter Setup/02A Search Watts* setting. Once automatically turned on, the power button on the inverter or router can be used to turn the inverter on or off.

Why use the Always Power-Up feature? Some people are familiar with Uninterruptable Power Supplies (UPS) that power-up automatically when DC power is connected. The *Always Power-Up* feature allows the inverter to power-on similar to an UPS.

- **02G Inverter Threshold to Start Parallel (or, the "parallel threshold"):** This setting is used for inverters in a parallel-stacked inverter system, and determines when the supplementary inverters turn on as a result of the percentage of power being provided by the main inverter

  Default setting: *60%*

  Range: *OFF, 30%-90% (10% increments)*

Info: Ensure the parallel threshold setting is not too high or the main inverter may reach its full output capacity and overload before the supplementary inverters can turn on and assist in powering the loads.

Info: The *02G Inverter Threshold to Start Parallel* feature only works with the parallel stacking inverter models (i.e., MS-PAE and MS-PE Series).

Info: When this setting is reached, all connected supplementary inverters turn on at the same time to deliver maximum power to the loads. After running approximately 30 seconds to stabilize the AC current, the supplementary inverter(s) that are not needed shut down and the units that are still inverting share the AC current equally.

Example: There are 3 MS4024PAE units in parallel (Main, Supplementary 1, and supplementary 2) with a total capacity of 12kW—the parallel threshold default is set to 60%. The main inverter is running a 2000W load, which is below the 60% threshold (4000W x .6 = 2400W). A 1000W load is added for a total system load of 3000W, exceeding the parallel threshold setting of 2400W. Supplementary 1 and Supplementary 2 inverters turn on, delivering up to 12,000W total power. Within approximately 30 seconds, the system shuts down Supplementary 2, and the Main and Supplementary 1 each run 1500W (sharing the 3000W load equally between them). Now, if the 1000W load is turned off (reducing the total system load to 2000W again), Supplementary 1 turns off and only the Main inverter is running the 2000W load.

Should I use the Parallel Threshold feature? Depends on the application. Most applications set a threshold level such that the connected supplementary inverters come on only when required to power the loads. This reduces the power drain on the batteries because the supplementary inverters that are not actively powering the loads are in standby. On the other hand, if you have a load larger than the capacity of the main inverter and the startup current is needed very quickly, you may need to turn the threshold setting to *OFF*. This ensures all the stacked inverters are always on to meet the fast startup current requirements of this large load.

Where should I set the Parallel Threshold? Depends on typical AC loads and how much time you want the main inverter to run (versus the supplementaries). If you want the main inverter to run as much of the loads as possible before the supplementary(s) turn on, then set the threshold at a higher setting. If you want the supplementary(s) to share more of the load, then set threshold to a lower setting.

Example: Loads are typically under 4000W and you have a 3-inverter parallel system. You want the Main to run loads up to 3000W before the supplementary inverters turn on. Set the parallel threshold to 75% (4000W x .75 = 3000W). The Main inverter now runs any load up to 3000W before the supplementary inverters turn on. In this case, if a 5000W load was turned on, the supplementary inverters would turn on, and then Supplementary 2 would turn off, and the Main and Supplementary 1 would each run at 2500W.

SETUP: 03 Charger Setup

- **03A AC Input Amps:** This setting ensures that the combined current draw from the battery charger and the AC loads does not exceed the maximum input current that is available from the incoming AC power. This setting is used to set that maximum input current level. Whenever the incoming AC is connected and passing thru the inverter, the current from the incoming AC used to power the AC loads and charge the batteries is monitored. If this current begins to approach the *AC Input Amps* setting, the charger current is automatically reduced. This ensures the AC loads have all the available current from the incoming AC power when needed. If using a MSH-M or MSH-RE (Hybrid) inverter, the AC input settings also determine when the battery current begins to operate in parallel with the incoming AC power to support the inverter loads, known as Load Support. The Load Support feature uses additional power from the inverter's battery to run loads greater than what the incoming AC power can run alone, and prioritizes the power of any external DC source (e.g., solar, wind, etc.,) over the incoming AC power to run inverter loads. For more information, see the Load Support Mode section in the MSH-M or MSH-RE Series Owner's Manual.

<u>Setting for all models except MSH4024RE</u>:

- ◇ **Set AC Input Amps**
  Default setting: *30 Amps*
  Range: *5-60 Amps*

<u>Settings for MSH4024RE</u>:

- ◇ **Set AC Input Amps (AC1 and AC2)**
  Default setting: AC1 = *30 Amps, AC2 = 20 Amps*
  Ranges: *5-60 Amps*

CAUTION: Unless you have an MS Hybrid Series inverter/charger—which has the Load Support feature—the *AC Input Amps* setting only limits the current to the battery, it does not limit the current to the inverter loads. If the current from the loads on the output of the inverter is greater than the circuit breaker rating on the incoming AC source, you <u>will</u> experience nuisance tripping.

Where should I set AC Input Amps? This setting needs to be set differently depending on your inverter/charger model—as described below:

ME, MS, and RD Series: These models connect to a single AC source and have two inputs (HOT IN 1 and HOT IN 2), but the current is only monitored on HOT IN 1. On these models—when wired as a dual-in configuration or as a single-in configuration with only the HOT IN 1 connected—the *AC Input Amps* setting should be set to the size of the AC circuit breaker that feeds the HOT IN 1 input. On these models, when wired as a single-in configuration with HOT IN 1 and HOT IN 2 jumped together, set the *AC Input Amps* setting to half (x½) the input breaker size—as half the current passes through HOT IN 1 and the other half through HOT IN 2 simultaneously.

MS-AE and MS-PAE Series: These models connect to a single AC source and have two inputs (HOT IN 1 & HOT IN 2), with the current monitored on both inputs at the same time. Since the input is from a single AC source, both of the input currents are added, then divided in half to determine the *AC Input Amps* setting. If the input breaker is a dual-pole (120/240 VAC input), set the *AC Input Amps* setting to the value of only one of the breaker poles (i.e., 30A dual-pole = 30A setting). If the input breaker is a single-pole (120 VAC input) and connected to only one input, set the *AC Input Amps* setting to one-half the input breaker size (i.e., 30A single-pole = 15A setting).

MS-E, MS-PE, MSH-M and RD-E Series: These models connect to a single AC source and have one input. Set the *AC Input Amps* setting to match the input AC circuit breaker size.

MSH-RE Series: This model can connect to two AC sources and have two inputs (AC1 & AC2), with the current monitored on each input separately. AC1 is set to the size of the utility breaker feeding the AC1 input, and AC2 is set to the size of the generator's breaker feeding the AC2 input.

MM, MM-AE and MMS Series (and any export version of these models): These models do not monitor current on the input, therefore cannot benefit from the *AC Input Amps* setting or feature. On these models, even though the *AC Input Amps* setting may display and allow selection/adjustment, this setting does not do anything to reduce the battery charger current.

Info: If you are supplying two AC sources (utility and generator) to the inverter's single input through an AC transfer switch, adjust the *AC Input Amps* setting to the smaller AC circuit breaker side of the two AC sources.

Info: The *AC Input Amps* setting is dependent on the stability of the AC source. If using a generator, factors such as altitude and output voltage regulation may require a lower setting than the generator's circuit breaker size. For best performance, lower the *AC Input Amps* setting to 1/3 of the generator's rated capacity, and then while the generator is heavily loaded, gradually increase the setting as high as possible; but ensure the voltage level stays above the *03B Low VAC Dropout* setting.

- **03B Low VAC Dropout:** Selects the minimum AC voltage that must be present on the input before the inverter/charger connects to the AC input and switches from Inverter mode to Standby mode. This setting also determines the lowest AC voltage that is allowed before the charger disengages and the inverter (if enabled) resumes powering the AC loads from the inverter's battery power—to protect AC loads during utility outages.

Example: If the *Low VAC Dropout* setting is 60 VAC, then the AC input voltage must be above 60 volts before the inverter connects and switches from Inverter mode to Standby mode. Once the AC is connected, the AC voltage must drop below 60 VAC to switch back to Inverter mode.

Settings for all models except MSH4024RE:

◇ **Set Low VAC Dropout** (AC1 only) – Sets at what AC voltage—from the HOT IN 1 to NEUT IN 1 terminals—the inverter/charger connects to or disengages from the incoming AC.

Default setting: *80 VAC* (*150 VAC* for export models)

Range: *60-100 VAC, UPS Mode* (*110-190 VAC, UPS Mode* for export models)

Settings for MSH4024RE models:

Info: The MSH4024RE is a dual input source inverter/charger having two independent AC source inputs (AC1/GRID and AC2/GEN) with independent VAC dropout settings for each input. The *Set Low VAC Dropout* screen only displays both the *AC1* and *AC2* fields if the router is connected to the MSH4024RE.

◇ **Set Low VAC Dropout** (AC1 and AC2) – The *AC1* setting determines at what AC voltage—from the AC1 to NEUT terminals—the inverter/charger connects to or disengages from the incoming AC. The *AC2* setting determines at what AC voltage—from the AC2 to NEUT terminals—the inverter/charger connects to or disengages from the incoming AC.

Default setting: *AC1=80 VAC, AC2=70 VAC*

Range: *60-100 VAC, UPS Mode**

** – Do not use UPS Mode as the AC2 setting if using a generator as your AC source.*

Where do I set my VAC Dropout? It depends on the application and what you are using as the AC source. The settings not only look at the incoming voltage level to determine when to transfer, but also determine how quickly the charger disconnects and starts inverting based of the fluctuations of the incoming AC voltage.

Dropout = 60 VAC to 100VAC (Export inverter models: Dropout = 110 VAC to 190 VAC) – Use a *Low VAC Dropout* setting from 60 VAC to 100 VAC (export models use a dropout from 110 VAC to 190 VAC) when the AC source may have fluctuations in RMS voltage. These settings attempt to prevent the charger from disengaging unnecessarily due to poor quality voltage, and are highly recommended if using a generator for charging. The transfer time from Standby mode to Inverter mode is >16 milliseconds when using these settings.

Dropout = UPS Mode – Use the *UPS Mode* setting when the AC source is well regulated above 105 VAC (200 VAC for export inverter models), and the inverter loads are sensitive to voltage fluctuations. This setting is intolerant of voltage fluctuations and provides a quick transfer. The transfer time from Standby mode to Inverter mode is ≤16 milliseconds when using this setting.

Info: If you get nuisance AC disconnects, either change the setting to 100 VAC or less (export models 190 VAC or less), or obtain a better voltage-regulated AC source.

- **03C Battery Type:** This setting selects the battery type, which determines the battery charge profile and ensures the batteries are receiving the proper charge voltage. The charge voltage settings are fixed when using the *GEL*, *Flooded*, *AGM1*, or *AGM2* selections, but can be adjusted if using the *CC/CV* or *Custom* selections.

  Default setting: *Flooded*

  Range: *AGM1, AGM2, Flooded, GEL, CC/CV, Custom*

  ◇ **Set Battery Type (GEL, Flooded, AGM1, or AGM2)** – When the battery type selection is *GEL* (for Gel batteries), *Flooded* (for liquid lead acid batteries), *AGM1* (for Lifeline AGM batteries), or *AGM2* (for East Penn/Deka/Discover/Trojan AGM batteries), the charge voltage level for the Absorption, Float, and EQ charge modes are fixed and shown in Table 3-1—depending on the battery type selected and the nominal inverter battery voltage.

Info: The voltage settings shown in Table 3-1 are based on the Battery Temperature Sensor (BTS) at a temperature of 77°F/25°C, or not connected. If the BTS is connected, the actual charge voltage increases if the temperature around the BTS is below 77°F/25°C, and decreases if higher than 77°F/25°C. This ensures the batteries receive the correct charge voltage regardless of temperature.

Table 3-1, Battery Type to Charge Voltages

Battery Type		Inverter Voltage	Absorption Voltage	Float Voltage	Equalization Voltage
Fixed Voltage	GEL	12 VDC	14.1 VDC	13.6 VDC	14.1 VDC[1]
		24 VDC	28.2 VDC	27.2 VDC	28.2 VDC[1]
		48 VDC	56.4 VDC	54.4 VDC	56.4 VDC[1]
	Flooded	12 VDC	14.6 VDC	13.4 VDC	15.5 VDC
		24 VDC	29.2 VDC	26.8 VDC	31.0 VDC
		48 VDC	58.4 VDC	53.6 VDC	62.0 VDC
	AGM1[2]	12 VDC	14.3 VDC	13.1 VDC	15.5 VDC
		24 VDC	28.6 VDC	26.2 VDC	31.0 VDC
		48 VDC	57.2 VDC	52.4 VDC	62.0 VDC
	AGM2[3]	12 VDC	14.5 VDC	13.5 VDC	14.5 VDC[1]
		24 VDC	29.0 VDC	27.0 VDC	29.0 VDC[1]
		48 VDC	58.0 VDC	54.0 VDC	58.0 VDC[1]
Adjustable Voltage	Custom[4]	12 VDC	12.0-16.0 VDC	12.0-16.0 VDC	12.0-16.0 VDC
		24 VDC	24.0-32.0 VDC	24.0-32.0 VDC	24.0-32.0 VDC
		48 VDC	48.0-64.0 VDC	48.0-64.0 VDC	48.0-64.0 VDC
	CC/CV	12 VDC	12.0-16.0 VDC	12.0-16.0 VDC	12.0-16.0 VDC
		24 VDC	24.0-32.0 VDC	24.0-32.0 VDC	24.0-32.0 VDC
		48 VDC	48.0-64.0 VDC	48.0-64.0 VDC	48.0-64.0 VDC

Note[1]: *Voltage same as absorption voltage—to prevent equalization.*
Note[2]: *Charge voltages for Concord (Lifeline Series) AGM batteries.*
Note[3]: *Charge voltages for East Penn, Deka, Discover and Trojan AGM batteries.*
Note[4]: *When using the Custom setting, the EQ (Equalization) voltage adjustment cannot be set lower than the Absorb Voltage setting. Also, the EQ Voltage adjustment cannot be set higher than 2 volts (12-volt systems), 4 volts (24-volt systems), or 8 volts (48-volt systems) above the Absorb Voltage setting.*

◇ **Set Battery Type (CC/CV) –** The *CC/CV* selection provides a 2-stage (Constant Current/ Constant Voltage) charging cycle with an adjustable charge voltage and output current. ***Note*:** *CC/CV settings only display if CC/CV has been selected from the 03 Battery Type menu.*

Info: If *CV/CC* has been selected from the *03C Battery Type* menu, the following menus are no longer accessible and display "*CC/CV Controlled*" when selected: *01H Max System Charge Amps, 03D Absorb Done*, *03E Max Charge*, *03F Final Charge, 07B Absorb Done*. This prevents charging conflicts occurring while in the CC/CV profile.

CAUTION: Whenever the CC/CV battery type is selected, some settings—within menus that are no longer accessible—are internally linked to the CC/CV settings and can be automatically changed. Because settings can be automatically changed once CC/CV has been selected, if a different battery type is selected, then all charge settings must be reviewed to ensure they are correct for the new battery type selection.

CC/CV Chg Settings

□ **Max Chg Rate** – A safety feature that ensures abnormal conditions do not cause the charger to hold batteries at a high voltage for a prolonged period of time. This menu sets a maximum time the charger is allowed to operate in either the Bulk, Absorption, or Equalization charge modes. If the charger reaches the maximum charge time setting, it transitions to the final charge stage as set in the SETUP button's *03F Final Charge Stage*.

Default: *Rate = 100%*

Range: *0-100%*

□ **CV Chg Volts** – Sets the voltage level at which the charger holds the batteries during the Constant Voltage cycle.

Default: *CV Chg Volts = 13.8 VDC (12v), 27.6 VDC (24v), 55.2 VDC (48v)*

Range: *OFF, 12.0-16.0 VDC (12v), 24.0-32.0 VDC (24v), 48.0-64.0 VDC (48v)*

CV Chg Done Time, CV Chg Done Amps, or Hold CV Chg Volts selections: These selections determine when the second stage of charging (Constant Voltage) is finished. If using the *CV Charge Done Time* or *CV Charge Done Amps* selections, once the constant voltage charge cycle is finished, it transitions to a Silent charge stage. During the Silent charge mode, charging is automatically stopped, but battery voltage is still monitored. The charger remains "Silent" until the battery voltage drops to the *Set DC Volts to Recharge* setting, at which time the charger starts another Constant Current/Constant Voltage charge cycle (Figure 3-12).

The *Hold CV Chg Volts* selection holds the battery in the constant voltage charge cycle voltage at the *CV Chg Volts* setting indefinitely (see Figure 3-13).

□ **CV Chg Done Time** (default) – The *CV Charge Done Time* selection is used when a specific time is selected to be the best solution for determining when the batteries are fully charged and the Constant Voltage stage needs to end.

* **Set CV Charge Done Time** – This setting determines how long the charger holds the battery voltage at the *CV Chg Volts* setting—per a set time period. When using time, the battery bank size typically determines the length of the *CV Charge Done Time* setting. The larger the battery bank, the longer the time needed to ensure a full battery charge. The charger transitions to Silent charge mode after the battery voltage has been at the *CV Chg Volts* setting for the selected time. Refer to Table 3-2 to assist you in selecting the *CV Charge Done Time* setting based on the AHr capacity of your battery bank.

Note: *After choosing the Set CV Charge Done Time, the Set Max CC/CV Charge Time and Set DC Volts to Recharge settings must be determined.*

Default: *Time = 2.0 Hrs*

Range: *0.1-25.5 Hrs*

□ **CV Chg Done Amps** – The *CV Charge Done Amps* setting is used when the DC amperage supplied to the batteries (i.e., done amps) determines when the batteries are fully charged and the Constant Voltage stage needs to end.

* **Set CV Charge Done Amps** – This setting determines how long the charger holds the battery voltage at the *CV Chg Volts* setting—based on a minimum current setting (i.e. done amps). During the Constant Voltage charge mode, as the battery charges, the current from the charger slowly decreases. When this current decreases below the *Set CV Charge Done Amps* setting, the charger transitions to the Silent charge stage. Most battery manufacturers use a specific formula to determine the done amps that indicate a full charge for their particular type of battery. The formula used by most manufacturers to absorb the batteries is C/20, where C=Battery Bank's Total Amp Hours. Basically, they take approximately 5% of the total battery bank size, and consider the battery totally charged when the charger's done amps drops to this level. Continuing to charge past this level may possibly overcharge the batteries. Check with your battery manufacturer to find out what the correct return amp settings are for your batteries.

Note: *After choosing the Set CV Charge Done Amps selection, the Set Max CC/CV Charge Time and Set DC Volts to Recharge settings must be determined.*

Default: *Amps = 20 ADC*

Range: *0-250 ADC*

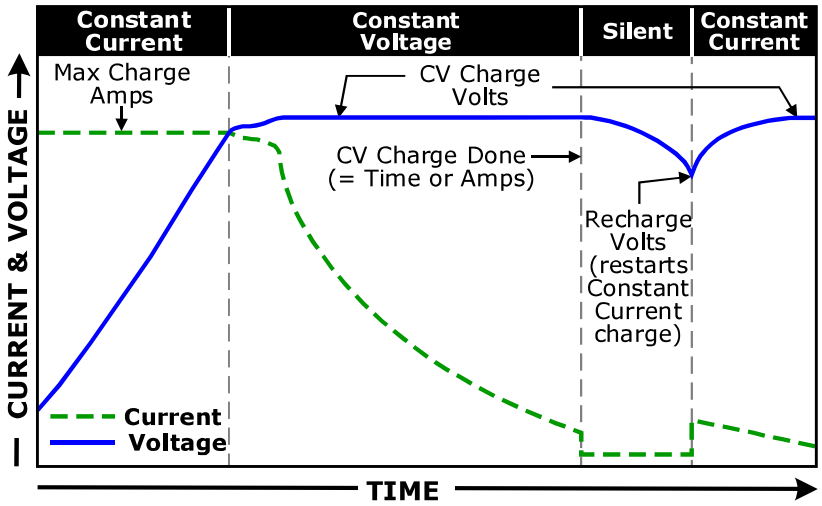

Figure 3-12, CV Charge Done Time/Amps Charge Stages

Info: It is highly suggested that you install a battery monitor if the *CV Charge Done Amps* setting is used. If a battery monitor is not installed, the *CV Charge Done Amps* setting relies on the METER menu's *01B Inv/Chg DC Amps* value to determine when to transfer out of the Constant Voltage charge mode. When a battery monitor kit (ME-BMK/ME-BMK-NS) is installed, the *CV Charge Done Amps* setting relies on the METER menu's *05C DC Amps-BMK* value to determine when to transfer out of the Constant Voltage charge mode. This is the most accurate DC amperage measurement. The DC amps reading from the battery monitor is accurate to +/ – .1 ADC.

Info: Setting the *CV Charge Done Amps* value to 0 (zero) will keep the charger in the Constant Voltage charge mode until the *Set Max CC/CV Time* setting (under *SETUP: 03C Battery Type/CC/CV*) is reached.

Info: When using the *CV Charge Done Amps* setting, the charger will stay in the Constant Voltage charge mode for a minimum of two minutes—even if the *Done Amps* current is below the *CV Charge Done Amps* setting.

Info: If DC loads are connected directly to the batteries, it is not recommended that you use the *CV Charge Done Amps* setting. DC loads cause the charger to increase the amperage delivered to the battery bank in order to charge the batteries and to run the DC loads. This scenario could result in overcharging the batteries since the done amps reading will be skewed by the DC loads.

□ **Hold CV Chg Volts** – This setting holds the battery voltage at the *CV Chg Volts* setting. This is for a system that requires a constant charge voltage to be present at all times.

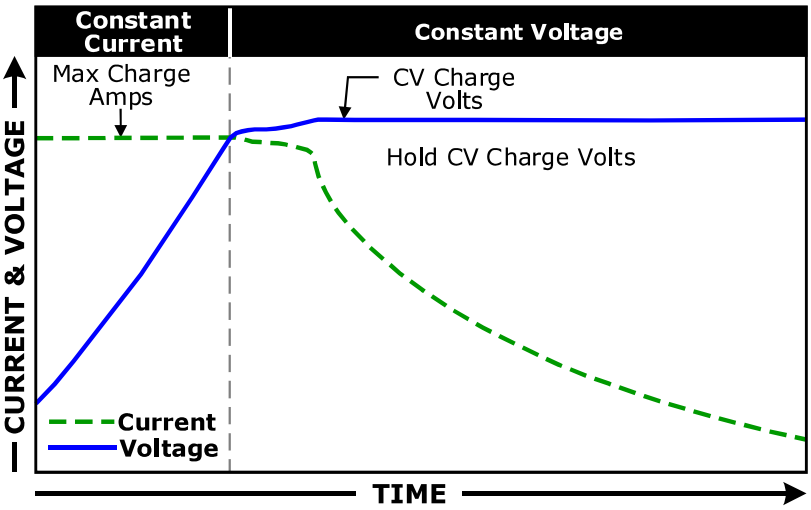

Figure 3-13, Hold CV Charge Volts CC/CV Charge Stages

o **Set Max CC/CV Charge Time** – This setting is a safety feature that ensures abnormal conditions do not cause the charger to hold batteries at a high voltage for a prolonged period of time. This menu sets a maximum time the charger is allowed to operate in either the Constant Current or Constant Voltage charge modes. If the charger reaches the maximum charge time setting, it will transition to the Silent charge stage. If using the *OFF* setting, the charger will stay in the Constant Current and Constant Voltage charge modes indefinitely.

Default: *Time = 12.0 Hrs*
Range: *OFF, 0.1-25.5 Hrs*

o **Set DC Volts to Recharge** – This setting determines the DC voltage set-point to which the batteries are allowed to fall—while the charger is in Silent charge cycle—before the charger restarts and recharges to the *CV Chg Volts* setting. This setting should be at the lowest DC volts level that you want the batteries to fall before starting a new charge.

Default: *DC Volts to Recharge = 12.0 (12v), 24.0 Volts (24v), 48.0 Volts (48v)*
Range: *12.0-16.0 Volts (12v), 24.0-32.0 Volts (24v), 48.0-64.0 Volts (48v)*

◇ **Set Battery Type (Custom) –** This selection allows you to individually adjust the float, absorb, and equalization charge voltage settings and to set an equalization time for your batteries. The following Custom battery settings display only if *Custom* has been selected from the *03 Battery Type* menu. Use these settings to determine the battery's absorption, float, and equalization voltages, and the maximum amount of time spent equalizing.

CAUTION: To avoid damage during battery charging or equalization, consult the battery manufacturer to ensure the best charge settings are used for your type of batteries.

Custom Chg Settings

□ **Absorb Volts** – Sets the level at which the charging voltage is held constant during an Absorption cycle.

Default: *14.4 Volts (12v), 28.8 Volts (24v), 57.6 Volts (48v)*
Range: *12.0-16.0 Volts (12v), 24.0-32.0 Volts (24v), 48.0-64.0 Volts (48v)*

□ **Float Volts** – Sets the level at which the charging voltage is held constant during a Float cycle.

Default: *13.2 Volts (12v), 26.4 Volts (24v), 52.8 Volts (48v)*
Range: *12.0-16.0 Volts (12v), 24.0-32.0 Volts (24v), 48.0-64.0 Volts (48v)*

□ **EQ Volts** – Sets the level at which the charging voltage is held constant during an Equalization cycle. ***Note:*** *Cannot be set lower than the* Absorb Volts *setting, or more than 2 volts (12v systems), 4 volts (24v), or 8 volts (48v) above the Absorb Volts setting.*

Default: 15.6 Volts (12v), *31.2 Volts (24v), 62.4 Volts (48v)*

Range: *12.0-16.0 Volts (12v)*, *24.0-32.0 Volts, 48.0-64.0 Volts (48v)*

□ **EQ Time** – Sets the time (duration) the battery charges at the *EQ Volts setting.*

Default: *4.0 Hrs*

Range: *0.1-25.5 Hrs*

Info: The timer for the *EQ Time* setting (*SETUP: 03C Battery Type/Custom* menu):

a) Counts when EQ is enabled and the voltage is close to the *EQ Volts* setting (≥0.1v/12-volt systems, ≥0.2v/24-volt systems, or ≥0.4v/48-volt systems).

b) Pauses when in Charger Standby.

c) Clears when EQ is finished, battery goes to Bulk/Absorb or Float, or EQ is stopped.

- **03D Absorb Done:** This setting identifies whether time, amps, or SOC are used to determine when the Absorption charge stage is finished and transitions to the final charge stage (see *03F Final Charge Stage*) afterwards. Absorption is the second stage of the battery charge process that attempts to fully charge the batteries.

Note: *If "CC/CV Controlled" displays on this menu's screen, you will not be able to adjust the settings as "CC/CV" has been selected as the battery type from the 03C Battery Type menu.*

Default: *Absorb Done Time*

CAUTION: If the Absorption stage is short or terminated, the batteries may not receive a full charge. In contrast, if the Absorption stage is too long the batteries may be overcharged. Either scenario may lead to damage to the batteries. Contact your battery manufacturer to ensure the best charge settings are used for your type of batteries.

◇ **Set Absorb Done Time** – *Set Absorb Done Time* is used when a specific time is determined to be the best solution for ending the Absorption stage. When using time, the battery bank size typically determines the length of the *Absorb Done Time* setting. The larger the battery bank, the longer the absorb time needed to ensure a full charge to the batteries. Taking specific gravity readings of the batteries and adjusting the absorb time may be needed in order to obtain the appropriate absorb time for your battery type and battery bank size. Use Table 3-2 to select the *Absorb Done Time* setting based on the amp-hr capacity of your battery bank.

Default setting: *Absorb Done Time = 2.0 Hrs*

Range: *0.1-25.5 Hrs*

Table 3-2, Battery Amp/Hrs Capacity to Suggested Absorb Time

Battery AmpHrs Capacity	Suggested Absorb Time	Battery AmpHrs Capacity	Suggested Absorb Time
200 to 300	60 minutes	1310 to 1500	240 minutes
310 to 500	90 minutes	1510 to 1700	270 minutes
510 to 700	120 minutes	1710 to 1900	300 minutes
710 to 900	150 minutes	1910 to 2100	330 minutes
910 to 1100	180 minutes	2110 to 2300	360 minutes
1110 to 1300	210 minutes	2310 to 2500	390 minutes

Info: Range of the *Absorb Done Time* setting is dependent on the inverter's compatibility level. With a compatibility level of ≥4.0, the available range is 0.1-25.5 hrs. However, if the compatibility level is less than 4.0, even though you can adjust the setting from 0.1-25.5 hours, the available range may not be recognized by the inverter, and causes the charger to revert to the default setting of 2.0 hours. See Appendix B for more info.

◇ **Set Absorb Done Amps** – This setting is used when the DC amperage supplied to the batteries determines when the batteries are fully charged. During Absorb Charge mode—as the battery charges—the current required by the battery decreases. "Done amps" refers to when the done amps decreases below the *Absorb Done Amps* setting continuously for two minutes, the charger transfers from the Absorption charge cycle to the final charge stage (see *03F Final Charge Stage*). Most battery manufacturers use a specific formula to determine the done amps that indicate a full charge for their particular type of battery. The formula used by most manufacturers to absorb the batteries is C/20, where C=Battery Bank's Total Amp Hours. Basically, they take approximately 5% of the total battery bank size, and consider the battery totally charged when the charger's done amps drops to this level. Continuing to charge past this level may possibly overcharge the batteries. Check with your battery manufacturer to find out what the correct return amp settings are for your batteries.

Default setting: *Amps = 20 ADC*
Range: *0-250 ADC*

Info: Setting the *Absorb Done Amps* value to 0 (zero) keeps the charger in the Absorption Charge mode until the *03E Max Charge: Time* setting is reached.

Info: When using *Absorb Done Amps*, the charger stays in Absorption Charge mode for a minimum of 2 mins—even if the done amps is below the *Absorb Done Amps* setting.

Info: If DC loads are connected to the batteries, the *Absorb Done Amps* setting should not be used. In order to charge the batteries—plus run the DC loads—the charger must increase the current delivered to the battery bank. This scenario could result in overcharging the batteries since the done amps reading is skewed by the DC loads.

Info: It is highly suggested that you install a battery monitor (ME-BMK or ME-BMK-NS) if this setting is used. If a battery monitor is not installed, this setting relies on the METER menu's *01B Inv/Chg DC Amps* value to determine when to transfer out of Absorption Charge mode. When a battery monitor is installed, the *Absorb Done Amps* setting relies on the METER menu's *05C DC Amps–BMK* value to determine when to transfer out of Absorption Charge mode. This is the most accurate DC amperage measurement.

◇ **Set Absorb Done SOC** – This setting can be used if a battery monitor kit is installed, and you want to use the SOC (State of Charge) of the battery bank to determine when the batteries are fully charged. During the Absorption Charge mode, once the *METER/05 BMK Meters/05A SOC* menu reaches the *Set Absorb Done SOC* setting, the charger transfers to the final charge stage (see *03F Final Charge Stage*).
Note: *SOC is the best way to determine when the batteries are fully charged—any DC loads or other charge sources connected to the battery bank will not affect the SOC reading.*

Default setting: *Absorb Done SOC = 100%*
Range: *50-100%*

Info: A ME-BMK is required in order to use this setting. If the *Absorb Done SOC* setting is selected and there is no ME-BMK installed in the system, or if there is not a valid SOC number displayed under the *METER/05 BMK Meters/05A SOC* menu (i.e., *Think'n*, *No Comm*, *Pwr-up Fault,* or *Factory Fault* are not valid SOC numbers), then the charger uses the *SETUP: 03D Set Absorb Done Time* setting—even if this setting is not enabled—to determine how long the charger stays in the Absorption Charge mode.

Info: If the *Absorb Done SOC* setting is used when charging from a generator source, then it is recommended that a setting of less than 100% be used (usually around 90% is acceptable). Running the generator higher than 90% is sometimes considered an inefficient use of fuel. However, if a setting lower than 100% is used, then the batteries should be charged to 100%, at least once a week, to make sure damage is not done to the batteries by not bringing them to a full charge state.

Info: If the *Absorb Done SOC* setting is active, the charger goes into Bulk Charge mode each time AC is connected.

- **03E Max Charge:** This menu sets the maximum charge rate allowed to charge the batteries during Bulk, Absorption, Float, and Equalize charging, as well as sets a maximum time the charger is allowed to operate in either the Bulk or Absorption Charge mode.

  Note: *If "CC/CV Controlled" displays on this menu's screen, you will not be able to adjust the settings as "CC/CV" has been selected as the battery type from the 03C Battery Type menu.*

  ◇ **Set Max Charge: Rate** – This setting is the maximum charge rate allowed to charge the batteries during Bulk, Absorption, Float, and Equalize charging; and is provided to limit the charge rate to the battery bank to prevent battery overheating caused by charging at too high a charge rate. A 100% setting uses the maximum charging capability of the inverter/charger to charge the batteries if needed, while a 0% setting minimizes the charging current while continuing to allow pass-thru current.

  The *Max Charge: Rate* setting is provided as a percentage of the inverter/charger's maximum charging capability. Refer to the label on the side of the inverter (or owner's manual) to determine the inverter's maximum charge rate. Divide the maximum current required by the inverter's maximum charging capability to determine the percentage needed to limit the charge rate to your battery bank.

  Default setting: *Max Charge Rate = 100%*

  Range: *0-100%*

  Example: The max charge rate of the inverter/charger is 120 amps. You need to limit the charge rate to 72 amps. Divide 72 by 120 = 0.6 (60%), choose the *Max Charge Rate = 60%*.

  Info: If the *Maximum Charge: Rate* setting is 0%, the topology of the Magnum inverter (when connected to AC source) overrides the 0% setting and starts charging if battery voltage is: <12 VDC (12-volt models), <22 VDC (24-volt), or <44 VDC (48-volt).

How do I determine where to set my Maximum Charge Rate? Generally, set to a C/5* rate (C = total AH capacity of battery bank—using the 20-hour AH rate). The C/5 rate is usually used when the objective is to quickly charge the batteries (i.e., 400 AH ÷ 5 = 80 amp maximum charge rate). A lower rate such as C/20* is used when the batteries need to be charged as slow as possible.

** C/5 or C/20 rate – charge rates are commonly expressed as a ratio of the total amp-hour (AH) capacity of the battery bank. For example, with a 400 AH battery bank (C = 400), the C/5 charge rate is 80 A (400/5 = 80 A).*

CAUTION: The C/5 or C/20 charge rate recommendations are not requirements on how you should set your battery charge rate. For specific charge rate requirements, refer to your battery manufacturer.

CAUTION: If multiple inverter/chargers are used on a single battery bank, you must ensure that the total charge rate from all inverter/chargers is limited to the maximum charge rate needed for your battery bank. The *Max Charge Rate* setting only limits the charging on each inverter/charger individually, not on all inverter/chargers.

◇ **Set Max Charge: Time** – The *Max Charge: Time* setting is a safety feature that ensures abnormal conditions do not cause the charger to hold batteries at a high voltage for a prolonged period of time. This menu sets a maximum time the charger is allowed to operate in either the Bulk, Absorption, or Equalization charge modes. If the charger reaches the maximum charge time setting, it transitions to the final charge stage as set in the SETUP button's *03F Final Charge Stage*.

Default setting: *Max Charge: Time = 12.0 Hrs*

Range: *OFF, 0.1-25.5 Hrs*

Info: If the time the charger has been in the Bulk, Absorption, or EQ charge modes has exceeded the *Set Max Charge: Time* setting, the CHG LED indicator blinks and "Max Charge Time" scrolls across the LCD display.

Info: The Max Charge Time safety feature uses the time accumulated under the *METER: 03A Charge Time* display to determine how long the charger has been in the Bulk, Absorption, or EQ charge modes.

Where should I set my Max Charge Time? In order to ensure a complete charge cycle is accomplished, adjust the *Max Charge: Time* setting to a time period that is normally longer than the settings in the following SETUP menus: *03D Absorb Done Time*, *Absorb Done Amps*, and *Absorb Done SOC*. The *Max Charge: Time* setting has priority over these menus and stops the charge cycle once that setting is satisfied.

Example: The *Max Charge: Time* setting is 6 hours, but the *Absorb Done Time* setting is 8 hours. After 6 hours in the absorption charge cycle, the charger transitions to the Final Charge stage.

- **03F Final Charge Stage:** The *Final Charge Stage* setting determines what charge stage(s) occurs after the absorption charge stage has finished.
  Note: *If "CC/CV Controlled" displays on this menu's screen, you will not be able to adjust the settings as "CC/CV" has been selected as the battery type from the 03C Battery Type menu.*
  Default setting: *Final Charge Stage = Multi-Stage*
  Range: *Multi-Stage, Float, Silent*

  ◇ **Set Final Charge Stage = Multi-Stage** – The *Multi-Stage* setting transitions from the Absorption charge stage to Float charge stage. Once in the Float stage for four hours with no DC load on the batteries, the charger enters the Full Charge stage (i.e., Battery Saver mode). In Full Charge mode, the charger automatically stops charging but is still on and actively monitoring the battery voltage. The charger remains in the Full Charge stage until the battery voltage drops below 12.7 VDC for 12-volt batteries (25.4 VDC for 24-volt batteries, and 50.8 VDC for 48-volt batteries), at which time it returns to the Float stage. The charger continues to cycle between Float and Full Charge as long as incoming AC is available. See Figure 3-14.
  Note: *These battery voltages are the fully charged voltages of a battery at rest.*

Info: When *Multi-Stage* is selected and the charger goes to Full Charge mode, if another charge source (such as PV or wind) is charging the batteries above the fully charged voltage, the charger remains in the Full Charge stage.

Why should I use Multi-Stage? *Multi-Stage* is the most commonly used charge mode. It is suitable for most applications and assures a full charge to the batteries, without overcharging. If there is another alternate charge source charging the batteries (PV, wind or hydro), then Multi-Stage mode uses the inverter/charger to complete a full charge. The inverter/charger transitions to Full Charge mode, and the alternate charge source then maintains the battery voltage. If the alternate source is unable to maintain the voltage, the charger enters Float mode for another 4-hour period. The *Full Charge* feature in the Multi-Stage mode also helps reduce water consumption in flooded batteries when they are left in the charge mode for extended periods, such as in a backup power application.

◇ **Set Final Charge Stage = Float** – The *Float* stage is a maintenance charge mode that maintains a constant voltage—while delivering up to the maximum rated current of the charger in order to power any DC loads connected to the batteries. Most 3-stage chargers finish the charge mode in Float, and remain in Float as long as an AC source is available on the input of the charger. The float voltage is determined by the battery type selected in the *03C Battery Type* menu. Unlike Multi-Stage mode, in Float mode there is no *Full Charge* feature. See Figure 3-15.

Why should I use the Float Charge Stage? Float mode is typically used when the charger is the only charge source connected to the batteries. This mode maintains the batteries at the float voltage. If using flooded batteries and the charger is in float for an extended period, the water level should be checked every two to three weeks for proper levels.

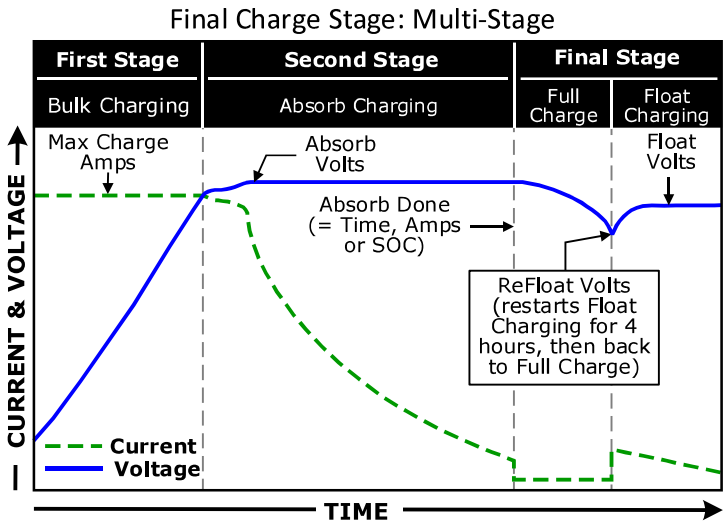

Figure 3-14, Final Charge Stage – Multi-Stage

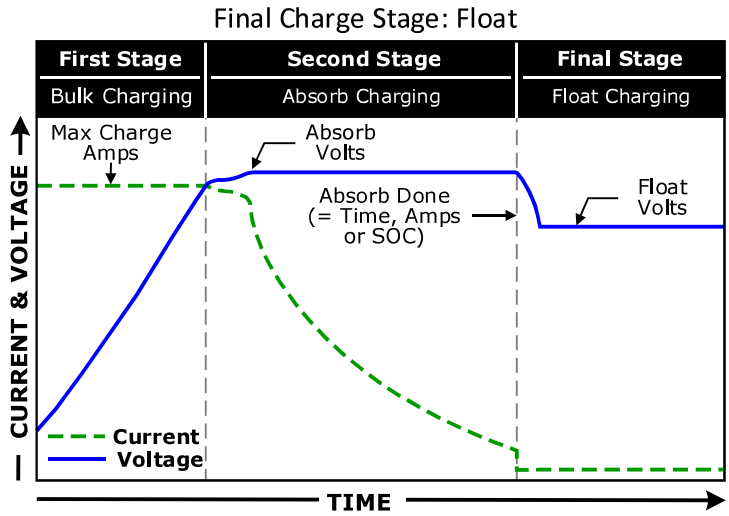

Figure 3-15, Final Charge Stage – Float

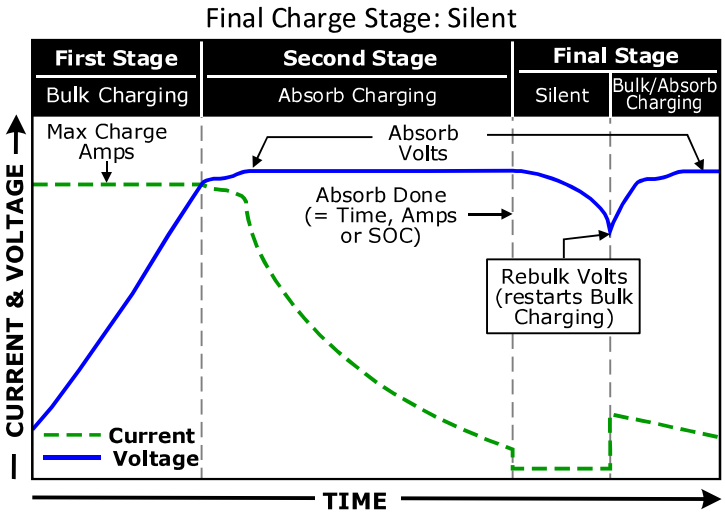

Figure 3-16, Final Charge Stage – Silent

◇ **Set Final Charge Stage = Silent** – If Silent mode is selected as the final charge stage, the charger stops charging once it transitions to '*Silent*'. Normally, the charger enters Silent mode after the absorption charge mode has finished, and after entering the Silent mode, the battery voltage is continuously monitored. If the batteries fall to the *Set DC Volts to Rebulk* value, the charger restarts the Bulk Charge mode and then transitions to Absorption Charge mode. After the Absorption Charge mode, the charger again transitions to Silent mode. This silent to Rebulk to Absorb and back to Silent cycle continues as long as it is required. See Figure 3-16.

□ **Set DC Volts to ReBulk** – When *Silent* mode is selected, you must also set the DC voltage set-point where the charger restarts the Bulk Charge mode. This setting should be at the lowest DC volts you want the batteries to fall before starting a new bulk charge. Typically, the lowest DC volts the batteries are allowed to fall is 12.0 to 12.2 VDC (12-volt systems), 24.0 to 24.4 VDC (24-volt systems), and 48.0 to 48.8 VDC (48-volt systems), respectively.

Default setting: *DC Volts to ReBulk = 12.0 VDC(12v), 24.0 VDC(24v), 48.0 VDC (48v)*
Ranges: *12.0-16.0 VDC (12v), 24.0-32.0 VDC (24v), 48.0-64.0 VDC (48v)*

Why should I use the Silent Stage? Silent mode is typically used when an alternate charge source is available and able to fully charge or finish the charge cycle after the Absorb stage. A major difference between Multi-Stage mode and Silent mode is that the Silent mode returns to Bulk mode instead of Float mode. In Silent mode you can also adjust the rebulk set-point in order to allow the alternate charge source to provide more of the battery charging.

- **03G Always Start Charge in Bulk:** When this setting is enabled, the charger automatically goes into the Bulk charge mode each time AC is connected to the inverter's AC input.

  Default setting: *Disabled*
  Range: *Enabled, Disabled*

Why should I enable the Always Start Charge in Bulk setting? Normally, when an AC source is connected to the inverter's AC input, the inverter makes a decision on which charge mode to enter based on the battery voltage level. If the battery voltage is at a high level (over 26.0 VDC for 24-volt models or 52.0 VDC for 48-volt models), the charge automatically goes into the Float charge mode to keep from overcharging the batteries. Some battery types (i.e., Lithium) normally rest at a high voltage level. With these battery types, the charger would always go into float charge, which may not allow these battery types to be fully charged. Enabling the *Always Start Charge in Bulk* setting will cause the charger to automatically go into the Bulk charge mode and go through a full charge each time AC is connected to the inverter's AC input.

3.3.4.1 Accessory Setup

Like the previous SETUP menu items, the accessory SETUP menus are accessed through the SETUP button and the accessory's "Home" screen under the PORT button. However, the *AGS Setup*, *BMK Setup*, *RC Setup*, or *PT Setup* menus only display if the related accessory is connected and communicating with the router unless the *TECH: 08 Show all Menus* menu has been set to "*YES*". Refer to page 47 for more information on the *TECH 08* menu. Otherwise, *"No *** Present"* appears when accessing any menu that uses the specific accessory.

Note: **** refers to the accessory not present (i.e., "No AGS Present", "No BMK Present", "No Remote Present", or "No PT Present".).*

SETUP: 04 AGS Setup

This menu is used to set up the functions related to the ME-AGS-N (Automatic Generator Start – Network version). Refer to Section 8.0 "Using an AGS Module" for detailed information on the available AGS menus using the router.

Info: For installation information on the ME-AGS-N, refer to your AGS owner's manual (PN: 64-0039).

SETUP: 05 BMK Setup

The ME-BMK/ME-BMK-NS (Battery Monitor Kit) accurately measures the SOC (State Of Charge), battery voltage, and the DC amps of the battery bank. Refer to Section 9.0 "Using a BMK" for detailed information on the available BMK menus using the router.

Info: For installation information on the ME-BMK/ME-BMK-NS, refer to your BMK owner's manual (PN: 64-0013).

SETUP: 06 RC Setup

A remote control can be connected to the router and used to monitor your system. Refer to Section 10.0 "Attaching a Remote Control" for information on the available remote control menus using the router.

Info: For additional information on the ME-RC or ME-ARC remote controls, refer to your remote's owner's manual (PN: 64-0003 for a ME-RC; PN: 64-0030 for a ME-ARC).

SETUP: 07 PT Setup

A PT-100 charge controller can be setup using the router. Refer to Section 12.0 "Using a PT Controller" for information on the available remote control menus using the router.

Info: For additional information on the PT-100, refer to the PT-100's owner's manual (PN: 64-0067).

3.3.5 TECH Button and Menus

The TECH menu button provides access to selections that assist service technicians in troubleshooting. It also provides access to system information, allows you to update the router's firmware, and provides an option to return all system settings to the original factory default values. See Figure 3-17 below.

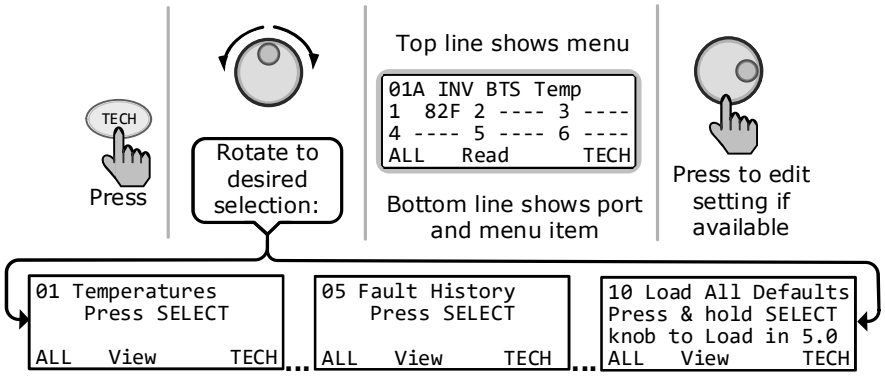

Figure 3-17, TECH Button

TECH: 01 Temperatures

The TECH button's first menu displays temps of ALL the units connected to the router. The units display in the order of the port# to which they are connected (1-6). Temperatures displayed are:

- **01A INV BTS Temp** – Displays the temperature of each inverter's Battery Temp Sensor (BTS) that is connected to the battery bank.
- **01B INV Tfmer Temp** – Displays the temperature of each inverter's main power transformer.
- **01C INV FETs Temp** – Displays the temperature of each inverter's Field Effect Transistors (FET).

Info: The temperatures are displayed in Celsius or Fahrenheit, as selected in the SETUP menu's *01D Temp Display* setting.

Note: *You can view all three of the above temperature readings on a single port-specific display for each connected inverter (see example below).*

- **01D AGS Sensor Temp** – Displays the temperature of the AGS's Battery Temp Sensor (BTS) that is connected to the battery bank.
- **01E ACLD Temperature** – Displays the internal temperature of the ACLD.
- **01F PT Temps** – Displays the temperature of each PT Controller's Battery Temp Sensor (BTS), main power transformer, and Field Effect Transistors.

To access the TECH button's port-specific menus:

1. From the System Home screen (press and hold METER button for approximately 3 secs to access), press the PORT button.
2. Continue to press the PORT button until the port# with the connected inverter appears ("INV Home" displays in the lower right corner of screen).
3. Press the TECH button. The *01 INV Temperatures* screen displays for the selected inverter.

Info: The remaining TECH menus can also be accessed as port-specific. However, these menus are identical in function as when accessed as ALL ports TECH menus.

```
01 INV Temperatures
BTS  ---F Tfmer ---F
FETs ---F
P1    Read      TECH
```

Figure 3-18, Port-Specific TECH Menus

TECH: 02 Port Vers/ARTR=4.0

Displays version of all router-connected units and the port#s to which they are assigned (P1-6).

Info: The router version displays on the top line of the screen of the TECH's versions menu item.

Info: The BMK, AGS, and the remote accessories may display a "*0.0*" version for several reasons. Either the accessory is not installed, there is no communication because of a bad or miswired network cable, the device is not powered, or the device is bad.

TECH: 03 AccPort Versions

The *AccPort Versions* menu displays the version of all inverter-connected accessories and the port #s to which they are assigned (P1A-6A).

TECH: 04 PT-100 Versions

Displays the version# of each connected PT Controller.

TECH: 05 Fault History

This menu provides a two-screen display (only one screen display for AGS faults) of historic information for each of the last 9 inverter and AGS fault records. Info for each fault displays from the most recent fault (H1) to the previous/past faults (H2 up to H9). See Figure 3-19 for examples of inverter fault history screens, Figure 3-20 for an example of an AGS fault history screen, and Figure 3-21 for an example of PT fault history screens.

Note: *If no faults are on record, the display shows " No Fault History".*

Info: All recorded fault history records are retained, even if power is removed from the router.

- **INV Faults** – Select to display a history of the last nine inverter faults.
- **AGS Faults** – Select to display a history of the last nine AGS faults.
- **PT Faults** – Select to display a history of the last nine PT faults.
- **Clear All Faults** – Select to clear <u>all</u> recorded fault history. Per directions on screen, press and hold the SELECT knob for ~ 5 seconds until the screen displays "*All Fault History cleared*". You are then returned to the *05 Fault History* main menu.

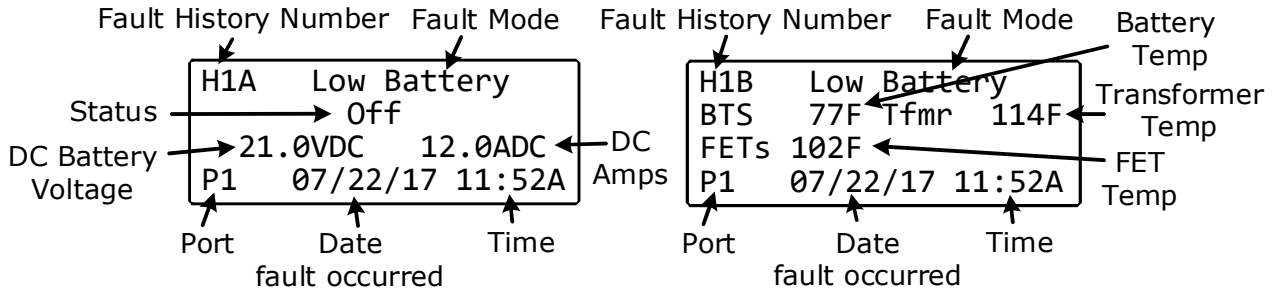

Figure 3-19, Inverter Fault History (first and second screens)

<u>Figure 3-19 – first screen (left graphic)</u>: *Top line* – displays fault history number, first screen (A), and recorded fault mode. *Second line* – displays status of the inverter/charger at time of fault. *Third line* – displays DC battery voltage and amperage readings at time of fault. *Bottom line* – displays port that fault occurred at, the date the fault occurred, and the time the fault occurred.

<u>Figure 3-19 – second screen (right graphic)</u>: *Top line* – displays fault history number, second screen (B), and recorded fault mode. *Second & Third line* – display transformer, battery, and FETs temperatures at time of fault. *Bottom line* – displays port that fault occurred at, the date the fault occurred, and the time the fault occurred.

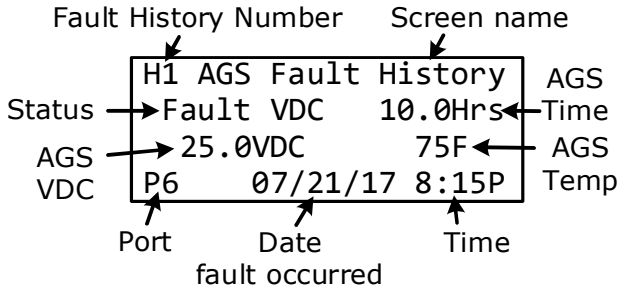

Figure 3-20, AGS Fault History

<u>Figure 3-20</u>: *Top line* – displays fault history number and screen name. *Second line* – displays AGS status and amount of time the generator has been running. *Third line* – displays voltage to AGS and AGS temperature. *Bottom line* – displays port that fault occurred at, the date the fault occurred, and the time the fault occurred.

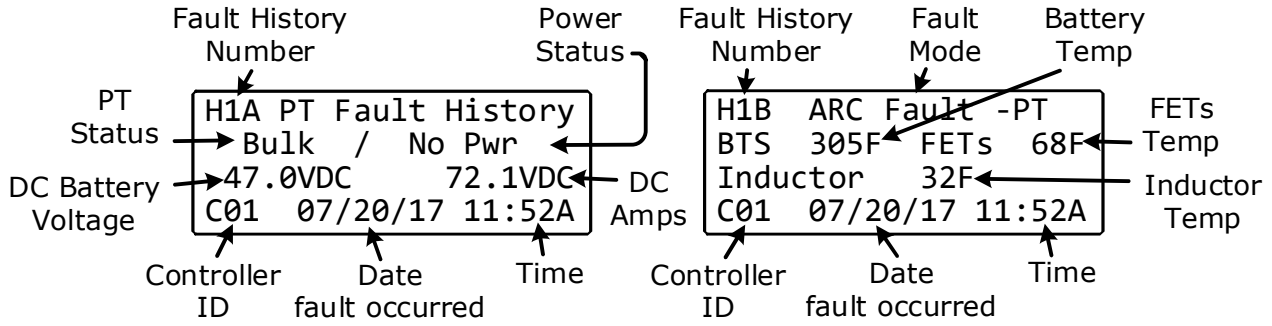

Figure 3-21, PT Controller Fault History (first and second screens)

<u>Figure 3-21 – first screen (left graphic)</u>: *Top line* – displays fault history number, first screen (A), and recorded fault mode. *Second line* – displays status of inverter/charger at time of fault. *Third line* – displays DC battery voltage and amperage readings at time of fault. *Bottom line* – displays port that fault occurred at, the date the fault occurred, and the time the fault occurred.

<u>Figure 3-21 – second screen (right graphic)</u>: *Top line* – displays fault history number, second screen (B), and recorded fault mode. *Second & Third line* – display transformer, battery, and FETs temperatures at time of fault. Bottom line – displays port that fault occurred at, the date the fault occurred, and the time the fault occurred.

TECH: 06 SETUP PIN

This menu sets the password (PIN - Personal Identification Number) that locks/unlocks the SETUP button menus.

Why should I use the PIN feature? This feature is useful when the operation of the inverter has been set up by an experienced user or installer. Restricting access to the SETUP menus with a password can avoid any unauthorized changes to your settings by inexperienced users.

Setting a PIN (unlocked SETUP button)

If a PIN has not been set, the SETUP menus are accessible to everyone (i.e., SETUP unlocked). When you first enter the *06 SETUP PIN* menu, *"Set New PIN"* displays on the second line. Press the SELECT knob, the "*Set SETUP PIN, Change PIN 0000*" menu appears. The first "*0*" is blinking.

From the *Set SETUP PIN, Change PIN 0000* menu:

1. Rotate the SELECT knob to the desired number 0-9, and then press SELECT.
   Note: A display of "*0000*" *indicates a PIN has not been set (this is the default setting).*
2. Repeat Step 1 to set the remaining 3 digits until the desired PIN displays.
3. After pressing the SELECT knob for the last digit, the PIN is set. The *Set SETUP PIN* menu now displays "*Unlock SETUP*" (blinking). Rotate the SELECT knob to access these options:
   - **Unlock SETUP** – Press SELECT to unlock the SETUP button menus. *"SETUP Unlocked"* displays. SETUP menus are now accessible to all.
   - **Lock SETUP** – Press SELECT to restrict access to the SETUP button menus to only those users with the new valid PIN. *"SETUP Locked"* displays. The new PIN must be entered to access SETUP menus.
   - **Change PIN** – Press SELECT to change the PIN. "*Change PIN 0000*" displays.

Entering the SETUP Menu When the PIN is Set and Locked

When you press the SETUP button and *"SETUP Menu, Enter PIN= ****"* displays, this indicates that a PIN has been set and the SETUP button menus are locked. The correct PIN must now be entered in order to access the menu. If the incorrect PIN is entered, *"Incorrect PIN"* displays. There is no limit on how many attempts can be made to enter the correct PIN number.

From the *SETUP Menu, Enter PIN=* **** menu:

1. Rotate the SELECT knob to the correct digit, and then press SELECT.
2. Repeat Step 1 to enter the remaining three digits of the existing PIN.
3. After pressing the SELECT knob for the last digit, access to the menu is permitted.

Info: After the correct PIN has been entered, you do not need to re-enter it again to access another protected menu unless 5 minutes has passed without any button push.

Changing a PIN

You can change your PIN at any time from the TECH button menu. However, to change an existing PIN, you must first enter that PIN in order to access the *Change PIN* menu option.

From the *TECH: 06 SETUP PIN* menu:

1. Press the SELECT knob, and then enter the existing PIN.
2. Once the existing PIN is entered and you press SELECT for the last digit, the *Set SETUP PIN* main menu displays ("*Unlock SETUP"* displays blinking).
3. Rotate the SELECT knob to the *Change PIN* menu option, and then press the SELECT button. The PIN field displays "*0000"*, with the first *0* blinking.
4. Enter the new PIN (see the "Setting a PIN" procedure above).
   Note: *"0000" is not a valid PIN.*
5. After pressing the SELECT knob for the last digit, the new PIN is set. Select either to unlock or lock SETUP.

Info: You can override or clear a previously entered PIN. When "*Enter PIN = ****"* displays, press and hold the SELECT knob until "*PIN = 0000*" displays (approximately 10 seconds). Enter a new PIN number as previously described.

TECH: 07 Ext Control

The *External Control* menu is read only. DMX Power has an open protocol policy which allows third party firmware companies to control certain functions of the inverter/charger. This menu displays if any external device/software is controlling the router. It is designed to help support staff determine if the inverter/charger is operating normally, or is being controlled by a third party.

- **NO** – Indicates no third party network device is controlling the router.
- **YES** – Indicates a third party network device is currently controlling one of the allowable router functions (third party functions displayed as a number). This number can be used by Tech Support to determine what code is controlling the router.

TECH: 08 Show all Menus

This menu enables you to have the router display all available screens (*YES*), or to just display those screens that pertain to the devices and accessories currently active (*NO*).

Info: You can lock this menu to "YES" by pressing and holding the SELECT button when the *Show all Menus* menu displays in View mode. "YES" is locked on power-down, but not after a factory default reset.

TECH: 09 Load New Firmware

This menu enables you to update the router's firmware using a SD card. Refer to Section 7.0 for more information and detailed instructions on performing the update procedure.

TECH: 10 Load All Defaults

This menu restores factory defaults to all settings on the inverter/charger and to any settings on accessories that are networked. To restore, press and hold the rotary SELECT knob for 5 seconds ("*Resetting...*" displays after 5 seconds). Refer to Table 3-3 for router default values.

Info: For information on the factory default settings for any networked accessory, refer to the owner's manual for that accessory.

Info: If the PIN has been set and locked, it must be entered before the *Load System Defaults* menu can be used.

Table 3-3, Inverter/Charger Default Settings on ME-ARTR

Menu Items	Default Settings
Search Watts	5 Watts
LowBatCutOut	10 VDC (12v), 20 VDC (24v), 40 VDC (48v)
AC In – Time	Connect = 6:00AM, Disconnect = 6:00PM
AC In – Volts DC	Connect = 11.0V (12v), 22.0 (24v), 44.0 (48v) Disconnect = 14.1V (12v), 28.2V (24v), 56.4V (48v)
AC In – SOC	Connect = 80%, Disconnect = 100%
Inv Always Power-Up	NO
Inv Threshold to Start Parallel	60%
AC Input Amps	30 Amps (AC1), 20 Amps (AC2)*
Low VAC Dropout	80 VAC (AC1), 70 VAC (AC2)*, (Exports – 150 VAC)
Battery Type	Flooded
Absorb Done	Time = 2.0 Hrs, Amps = 20 ADC, SOC = 100%
Max Charge	Rate = 100%, Time = 12.0 Hrs
Final Charge Stage	Multi-Stage
Always Start Charge in Bulk	Disabled

** AC2 settings available on MSH4024RE models only.*

4.0 ME-ARTR Menu Maps

Figures 4-1 thru 4-6 are an overview of the settings and information displays available from the router's menu buttons (see Sections 8.2.5, 9.2.3, 11.2.3, and 12.2.3 for overviews of router menus for any attached AGS, BMK, ACLD, and PT-100 controller respectively). Figure 4-2 includes a port-specific METER menu for a connected inverter.

Figure 4-7 provides a legend key for the symbols used in these menu displays. Refer also to Appendix A in the back of this manual for a glossary of abbreviations that may appear on the router's LCD display. ***Note:*** *When applicable, defaults and ranges are listed for a 24-volt battery.*

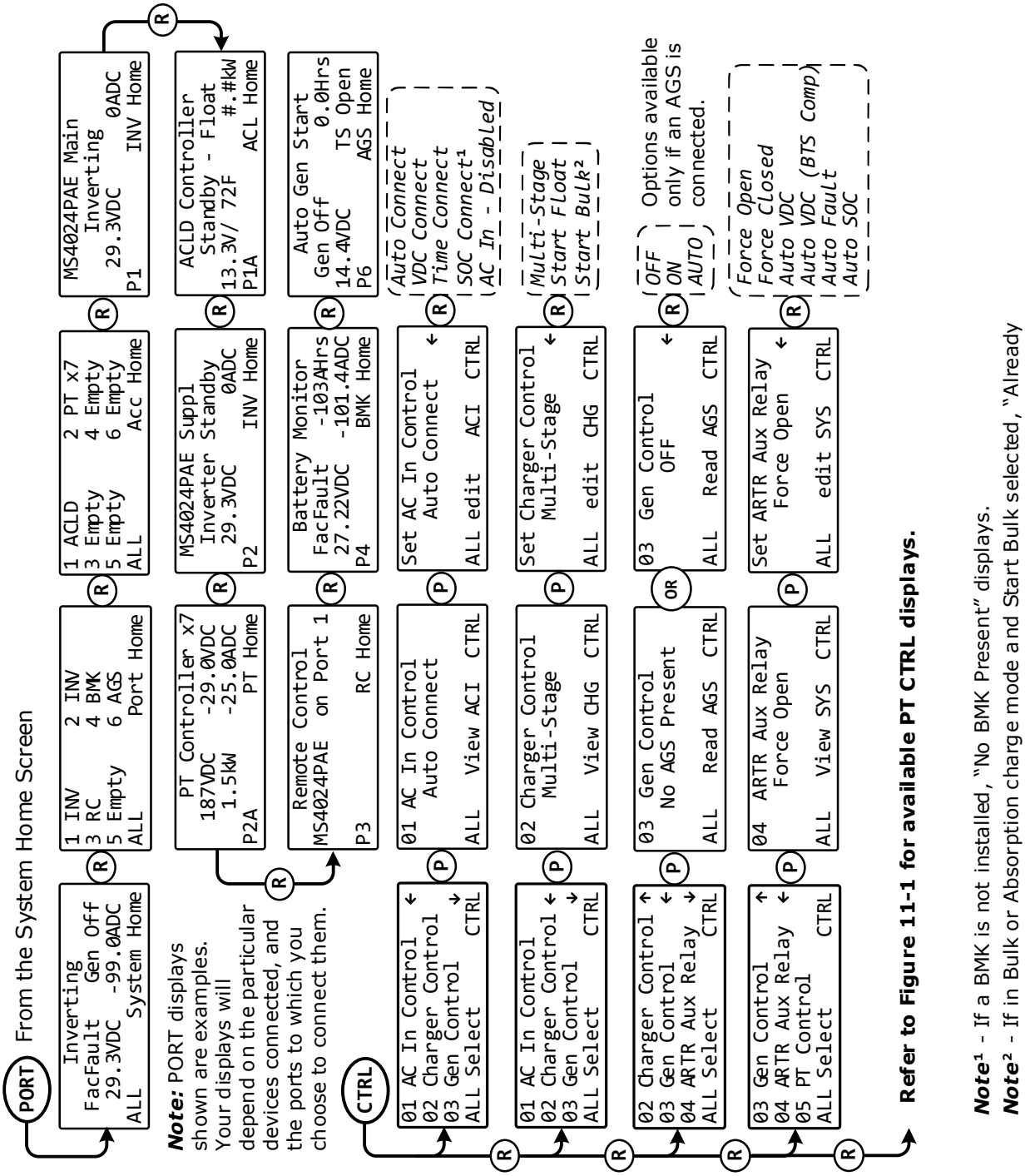

Figure 4-1, PORT/CTRL Button Menu Maps

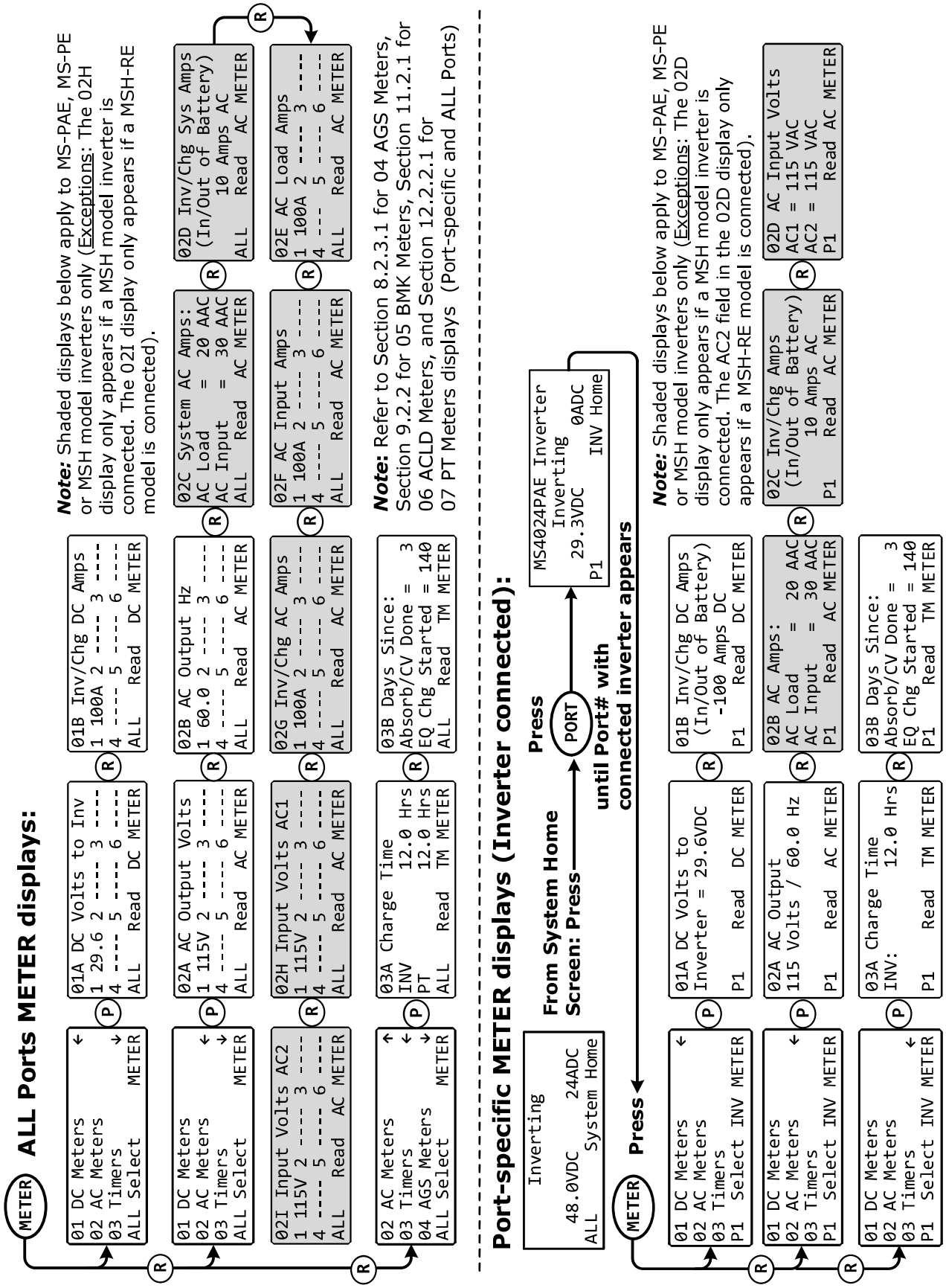

Figure 4-2, METER Button (ALL Ports & Port-specific) Menu Map

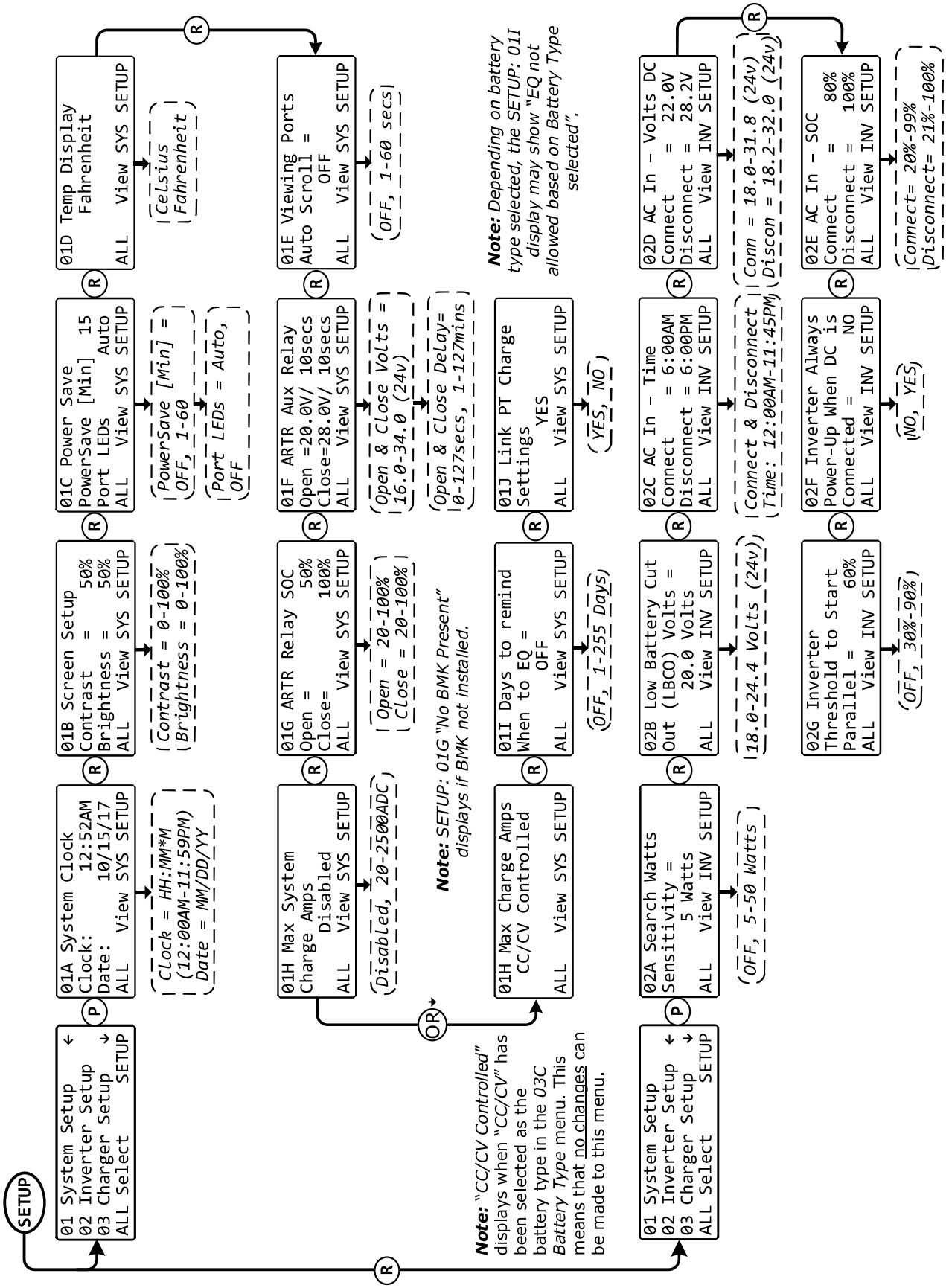

Figure 4-3, SETUP Button (System and Inverter Setup – ALL Ports) Menu Map

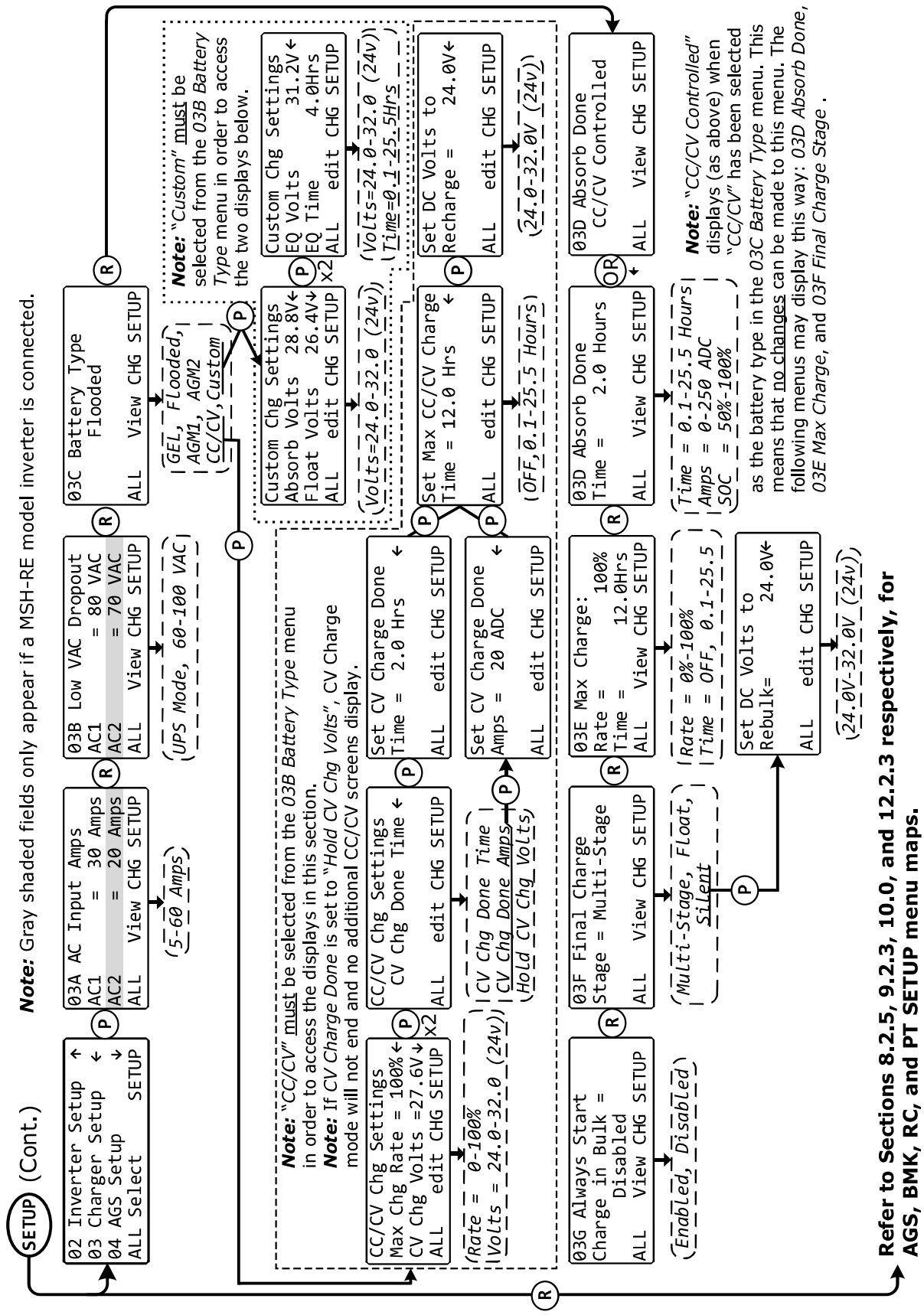

Figure 4-4, SETUP Button (Charger Setup – ALL Ports) Menu Map

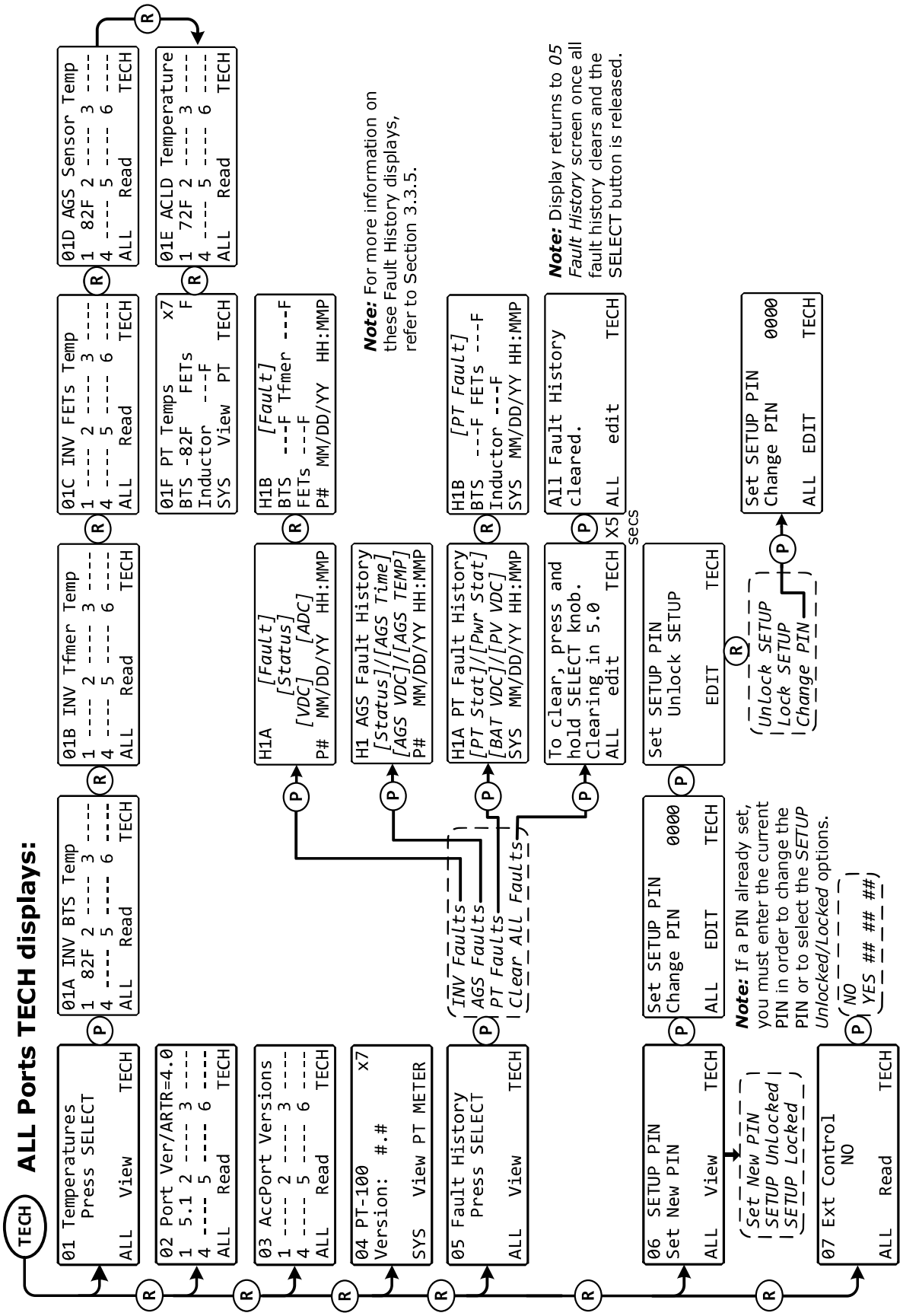

Figure 4-5, TECH Button (ALL Ports) Menu Map

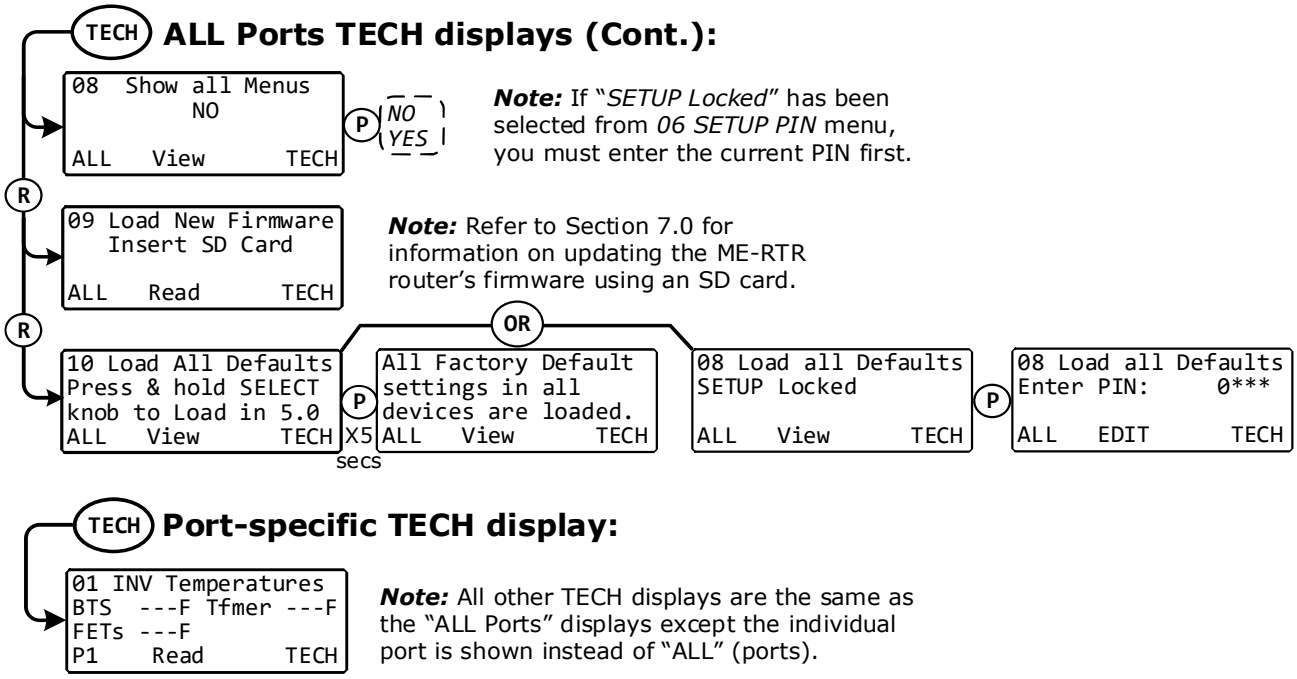

Figure 4-6, TECH Button (Single Ports) Menu Map

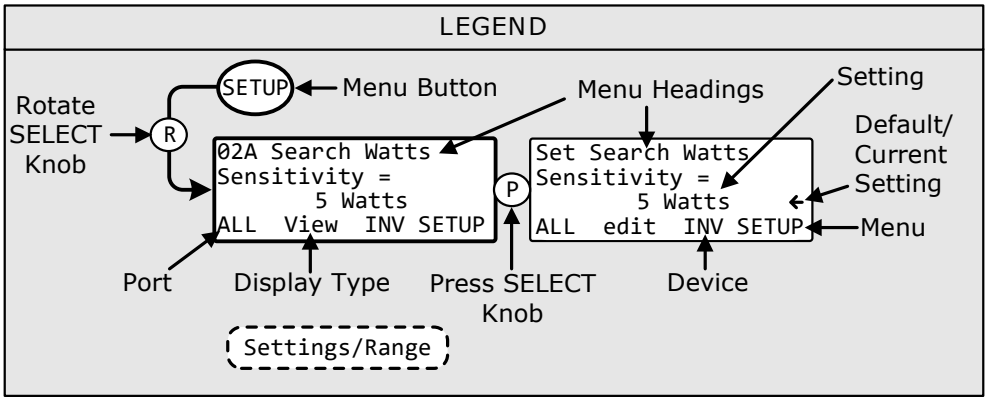

Figure 4-7, Legend Key for Menu Maps

<u>Screen definitions</u>:

Device – Displays the device being monitored or adjusted. Such as: Inverter (INV), Automatic Generator Start (AGS), Battery Monitor (BMK), Remote Control (RC), AC Load Diversion (ACLD).

Device Menu – Displays the particular menu you are on/viewing (e.g., "INV SETUP" is the inverter Setup menu, "CHG SETUP" is the charger Setup menu, "AGS METER" is the AGS Meter menu, etc.,)

System – Displays the top level information for the system.

Home – Displays the top level information for the port (device) selected.

"Up" Arrow – Denotes that more selections are available prior to the current selection.

"Left" Arrow – Denotes the current selection.

"Down" Arrow – Denotes that more selections are available after the current selection.

Display Type – Displays what type of action can be performed from the display. See Section 5.1.2 for information on the actions associated with these menu items.

Port – Displays what port you are on/viewing. May be a main port (P#), an accessory port (P#A), or the information displayed is from all ports (ALL).

5.0 Operation

This section explains how to operate the inverter/charger using the ME-ARTR router. It also provides information on the LED indicators and the LCD display that are used to show the operational status of the inverter/charger.

5.1 Front Panel

The router's front panel contains LED indicators and a LCD display for viewing system status, buttons to control system operation, and a rotary knob that enables you to locate and select system information and settings.

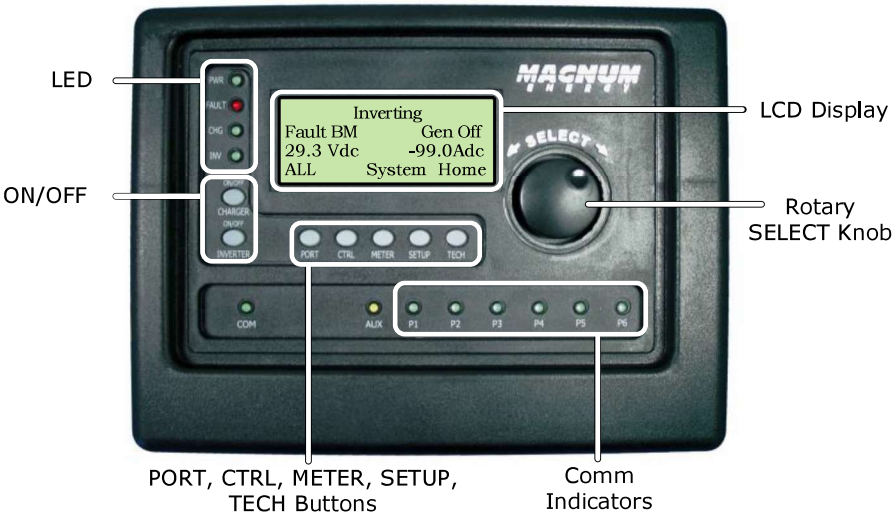

Figure 5-1, ME-ARTR Front Panel Controls and Indicators

5.1.1 LED Indicators

There are four LED indicators on the front panel that light solid or blink to indicate the inverter/ charger's status. When the router is first powered-up, all the LEDs come on as it goes through a self-test (see Section 3.1). Once the self-test is complete, the LEDs and LCD provide the operating status of the inverter/charger. See Section 5.1.1 for more information on the LED indicators.

5.1.2 LCD Display

The LCD display is used for setting up the system operation, as well as viewing current system operating status and fault conditions. This display has four lines of alphanumeric characters and features a backlight that can be set to turn off to conserve power.

- Top line: provides inverter/charger status or system status (which is detailed in this section).
- Second line: displays accessory/device status or battery information when using the METER menu, system troubleshooting information when using the TECH menu, and menu items that can be configured for your specific system operation while in the SETUP menu.
- Third line: displays system menu information, and as with second line, displays setup fields for determining system operation.
- Bottom line: displays port information (port# or ALL ports), what action you can perform (see list below), and identifies the menu you have accessed and the device being adjusted/ monitored.

  edit – menu with editable settings/values that have not been changed by the SELECT knob

  EDIT – menu with editable settings/values that have been selected and changed

  Read – read only menu, settings/values cannot be changed from this menu

  Select – top level menu, press SELECT knob to access sub-menus

  View – menu that with a press of SELECT knob accesses editable settings/values

5.1.3 ON/OFF Buttons

- **ON/OFF INVERTER:** This button toggles the inverter function on and off. The green INV LED turns on and off with the button.
- **ON/OFF CHARGER:** This button toggles the charger function on and off after it is actively charging. This button is also used to initiate an Equalize charge. See Section 5.2.2 for more info on using the Equalize charge feature (see Equalizing mode info on pages 60-61).

5.1.4 Menu Buttons

These five buttons provide quick access to menu items for configuring, monitoring, and troubleshooting your inverter/charger system.

- **PORT:** This button scrolls through the active communication ports (P1-P6). Pressing the PORT button skips over non-active or empty ports allowing quick access to connected devices.
- **CTRL:** This button contains the *AC In Control*, *Charger Control*, *Gen Control*, *ARTR Aux Relay,* and *PT Control* menus. The CTRL button gives you quick control of the main functions of the inverter/charger.
- **METER:** This button provides meter information on the inverter/charger, and the ME-AGS-N and ME-BMK/ME-BMK-NS (if connected). See Section 3.3.3 for more detailed information.

Info: If the LCD display becomes unreadable, press and hold the METER button until the System Home screen appears (~3 seconds) to refresh the LCD display.

- **SETUP:** This button allows the router, the inverter/charger, and any connected accessory to be configured to your specific system preferences. See Section 3.3.4 for more information.
- **TECH:** This button allows you to access menu selections that can help service personnel with troubleshooting, and also allows the factory default settings for the inverter/charger and any connected accessory to be restored. See Section 3.3.5 for more information.

5.1.5 Rotary SELECT Knob

The rotary SELECT knob is used to view and select various menu items and settings displayed on the LCD screen. Turn clockwise/counterclockwise to view the different menu items and available settings. Press the SELECT knob to select/enter a menu item or to save a setting once it is displayed on the LCD screen.

Info: All adjustable settings in the router (except for *SETUP: 01B Screen Setup*, *CTRL: 03 Gen Control* and *TECH: 08 Show all Menus*—which revert back to default) are saved in non-volatile memory and are preserved until changed—even if an inverter reset is performed or if all power to the router or inverter is removed.

CAUTION: An accessory that is networked to the inverter may have adjustable settings that revert back to default if all power to the inverter is lost. Refer to the owner's manual for the particular accessory to determine if any setting is affected.

5.1.6 Aux Relay LED Indicator

The yellow Aux LED indicator allows a visual indication of the Aux Relay's operation. The LED will be ON when the relay is disengaged (energized), and will be OFF when the relay is engaged (de-energized). See Figure 5-2.

What is the Aux Relay used for? Commonly used to turn on an exhaust fan to eliminate your battery bank gasses per the VDC start and stop settings. The Aux Relay can also be used to control the coil of a current carrying relay.

How do I adjust the Aux Relay? The *SETUP: 01F ARTR Aux Relay* and *01G ARTR Relay SOC* menus are used to determine the conditions (DC volts, inverter fault, or battery SOC) at which the relay automatically engages and disengages.

Figure 5-2, Aux Relay LED

5.2 Operating the Inverter/Charger

5.2.1 Inverter Mode

Turning the inverter on: Press the ON/OFF INVERTER button to activate the inverter function. The inverter will either be actively "inverting" by using power from the batteries to power the AC loads; or, the inverter will be "searching" for a load by using very little power from the batteries, if in Search mode. The green INV LED is on when the inverter is actively inverting, and the green INV LED flashes while searching.

Turning the inverter off: While the inverter is actively inverting or searching, press the ON/OFF INVERTER button to switch the inverter function off. This turns the green INV LED off.

Inverter Standby: The inverter is in Inverter Standby mode when enabled (green INV LED is on) but not actively powering AC loads from the batteries. If in a standalone system, the inverter is in Inverter Standby when the charger is active (i.e., Charge mode). In a parallel system, inverter standby occurs to the supplementary inverter when it is monitoring the power requirement of the parallel system to determine when to activate and provide power to assist the main inverter.

5.2.2 Charger Mode

Turning the charger on: Charge mode is automatically activated and begins when acceptable AC power (utility or generator) is connected to the input of the inverter. When in Charge mode, the display may show: *Absorb Charging, Bulk Charging, Charger Standby, Charging*, *Equalizing, Float Charging*, *Full Charge*, *Load Support AAC*, *Load Support VDC*, and *Silent*. (When the charger is ON and actively charging, it produces DC voltage and current to charge your batteries, and the CHG LED is solid.)

CAUTION: If you have critical loads and are in Charge mode, do not press the ON/OFF INVERTER button, or you may inadvertently turn the inverter function off. While in any Charge mode, ensure the green INV LED is ON, or inverter power will NOT be available to run your critical loads if the external AC power is interrupted.

Charger Standby: While the charger is actively charging, press the ON/OFF CHARGER button to switch the charger to Charger Standby. When in Charger Standby, the incoming AC is still available on the inverter's output, but the charger is not allowed to charge. The LCD displays *"Charger Standby"* and the CHG LED flashes.

Info: To resume charging, momentarily press the ON/OFF CHARGER button or disconnect/reconnect AC power to the inverter's input.

Equalize charging: Equalizing is a 'controlled overcharge' performed after the batteries have been fully charged. It mixes battery electrolyte (to reverse the buildup of stratification) and removes sulfates that may have built up on the plates. These conditions, if left unchecked, reduces the overall capacity of the battery. To enable the Equalization charge, see pages 60-61.

WARNING: Do not perform an Equalization charge without reading and following all safety precautions pertaining to charging/equalization as noted in this manual and provided by the battery manufacturer.

5.3 System Status Messages

A status message may be an operational or fault message indicating the inverter/charger's current operating status. This section covers the inverter/charger's operating and fault modes, and the available status messages under each mode.

Use the displayed status message and the status LEDs on your router to determine the inverter/charger's current operating status, and to help troubleshoot the system if a fault occurs.

The ME-ARTR has four Home screens: a System Home screen, All PORTs Home screen, Individual PORTs Home screen, and an Accessory PORTs Home screen (see Figure 5-3). Each display shows pertinent information about any attached devices or accessories, as well as their current operating status. The router's FAULT LED flashes if one of the devices/accessories has a fault (see Sections 5.3.4 & 5.3.5 for information on identifying and resolving faults).

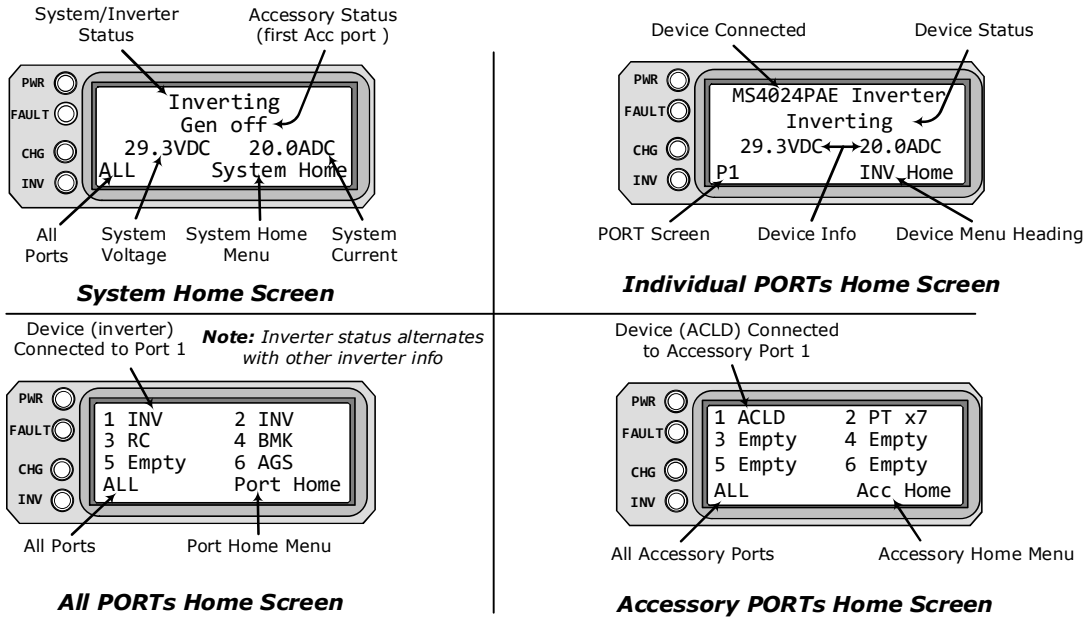

Note: *Statuses are abbreviated on the All PORTs and Accessory PORTs Home screens*

Figure 5-3, SYSTEM Status Home Screens

Info: Whenever referencing "inverter/charger" in this section, please note it is referring to all paralleled stacked inverter/chargers, not individual inverter/chargers.

There are three modes of operation for the inverter/charger system:

- Inverter Mode
- Charger Mode
- Fault Mode

5.3.1 Inverter Mode Status Messages

There are several Inverter mode messages. View the top line of the LCD display and the corresponding message in this section to identify and understand the particular Inverter mode.

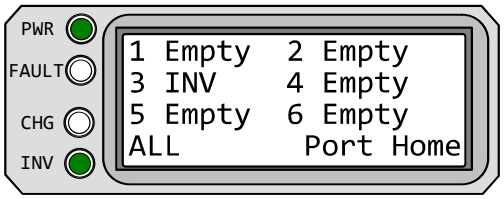

Empty appears on the LCD. The PWR (green) and INV (green) LEDs are on solid. The FAULT (red) and CHG LEDs are off.

Figure 5-4, Empty

- **Empty** – No device is connected to the router port.
  Note: *This status differs from a "No Inverter Found!" fault status. Power is present, but no information is being received from the router port.*

Inverting appears on the LCD. The PWR (green) and INV (green) LEDs are on solid. The FAULT (red) and CHG LEDs are off.

Figure 5-5, Inverting Mode

- **Inverting (Invert)** – The inverter is providing AC voltage on its output by inverting power from the batteries.

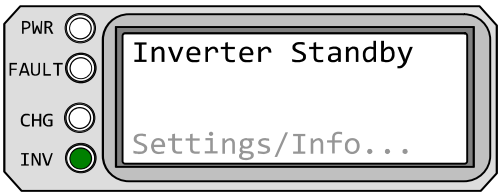

Inverter Standby appears on the LCD. The INV (green) LED is on solid. All other LEDs are off.

Figure 5-6, Inverter Standby Mode

- **Inverter Standby (Inv Stby)** – The inverter is on, but not actively providing power. However, it is monitoring the power requirement of the parallel system to determine when to activate and provide power to assist the main inverter.

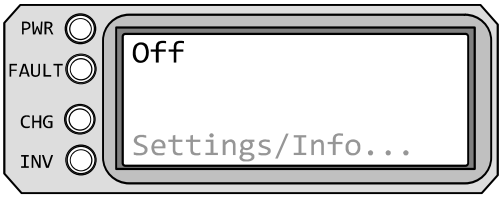

Off appears on the LCD. All LEDs are off.

Figure 5-7, Off Mode

- **Off** – This message tells you that there is no AC available on the inverter's AC output. The inverter function is OFF and there is no utility or generator AC power sensed on its input.

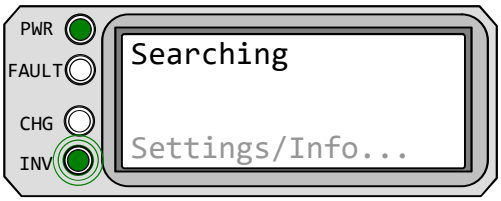

Searching appears on the LCD. The PWR (green) LED is on solid and the INV (green) LED flashes. The FAULT (red) and CHG (green) LEDs are off.

Figure 5-8, Searching Mode

- **Searching (Search)** – The inverter is in Search mode—the AC loads on the inverter output are less than the SETUP button's *02A Search Watts* setting. The Search mode function reduces the inverter draw from the battery, and may be turned off at any time for full inverter output.

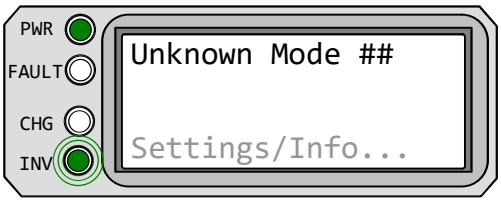

Unknown Mode ## appears on the LCD. The PWR (green) LED is on solid and the INV (green) LED flashes. The FAULT (red) and CHG (green) LEDs are off.

Figure 5-9, Unknown Mode ##

- **Unknown Mode ## (Mode ##)** – This status message displays when the inverter/charger has sent a fault code that cannot be determined by the router.

Remedy: Call the Technical Support department at DMX Power (800-553-6418) for assistance in determining and understanding the actual fault status.

5.3.2 Charger Mode Status Messages

When AC power (utility or generator) is connected to the inverter/charger it monitors the AC input for acceptable voltage. Once AC input is accepted, the AC transfer relay (within inverter) closes and Charge mode begins. View the top line of the LCD display and the corresponding message in this section to identify and understand the particular Charge mode that displays.

Info: The AC input becomes acceptable once a minimum 10-second delay passes, the voltage is greater than the SETUP button's *03B Low VAC Dropout* setting, and there is no *CTRL: AC In Control* menu setting that is actively preventing the AC from connecting.

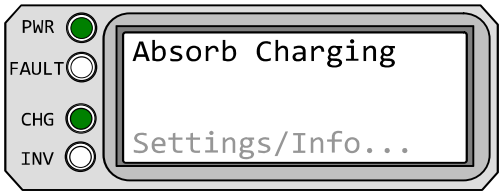

Absorb Charging appears on LCD. PWR (green) LED is on solid. CHG (green) LED is typically on solid, but may blink. FAULT (red) LED is off, and INV (green) LED could be on or off.

Figure 5-10, Absorb Charging Mode

- **Absorb Charging (Absorb)** – The Absorb Charge state is the constant voltage stage and begins when the absorb voltage is reached (determined by the SETUP button's *03C Battery Type* setting) while Bulk charging. During this stage, the DC charging current decreases in order to maintain the absorb voltage setting. This charge stage continues until the *03D Absorb Done* (*Time*, *Amps*, or *SOC*) or *03E Max Charge: Time* setting is reached.

Bulk Charging appears on LCD. PWR (green) LED is on solid. CHG (green) LED is typically on solid, but may blink. FAULT (red) LED is off. INV (green) LED could be on or off.

Figure 5-11, Bulk Charging Mode

- **Bulk Charging (Bulk)** – The battery charger is delivering maximum current (determined by the SETUP button's *03E Max Charge: Rate* setting) to the batteries. The charger remains in Bulk charge until the absorb voltage (determined by the SETUP button's *03C Battery Type* menu setting) or the *03E Max Charge: Time* setting is reached.

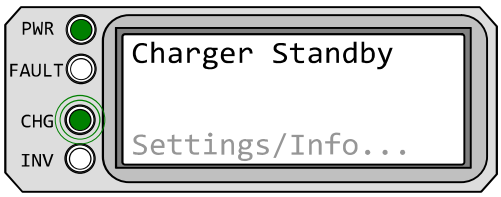

Charger Standby appears on LCD. PWR (green) LED is on solid and CHG (green) LED blinks. FAULT (red) LED is off, and INV (green) LED could be on or off.

Figure 5-12, Charger Standby Mode

- **Charger Standby (Chg Stby)** – This indicates the charger has been disabled to prevent further charging, but the AC power (from utility or generator) to the AC input is still available on the AC output. This display is shown when the ON/OFF CHARGER button is pressed while the AC power is passing through the inverter/charger.

Info: Press ON/OFF CHARGER button to re-enable charging. When enabled, the charger continues in the previous charge mode and the CHG (green) LED comes on solid.

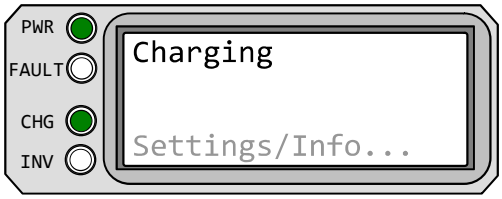

Charging appears on LCD. PWR (green) and CHG (green) LEDs are on solid. FAULT (red) LED is off, and INV (green) LED could be on or off.

Figure 5-13, Charging Mode

- **Charging (Charge)** – Once Charge mode is enabled, the unit waits and displays "*Charging*" to determine the charge routine. The charger initiates Bulk Charging if connected to AC based on SOC, the battery type is CC/CV, or if the DC voltage is low (≤12.8 VDC / 12-volt models, ≤25.6 VDC / 24-volt models, or ≤51.2 VDC / 48-volt models). If the DC voltage is high (≥12.9 VDC / 12-volt models, ≥25.6 / 24-volt models, or ≥51.2 / 48-volt models), the charger skips the Bulk and Absorb charging stages and goes directly to the final charge stage (Float or Silent).

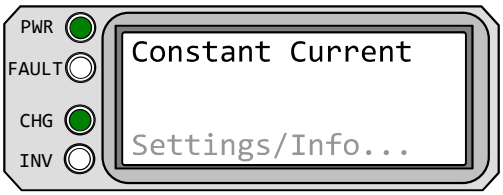

Constant Current appears on LCD. PWR (green) and CHG (green) LEDs are on solid. FAULT (red) LED is off, and INV (green) LED could be on or off.

Figure 5-14, Constant Current Mode

- **Constant Current (CCurrent)** – The battery charger is delivering maximum current to the batteries (determined by the *Max Charge Amps* setting under the SETUP button's *03C Battery Type: CC/CV* menu). The charger remains in Constant Current charge until the *CV Charge Volts* or *Max CC/CV Charge Time* is reached (determined by the settings under the SETUP button's *03C Battery Type: CC/CV menu*).

Note: *This status only displays if "CC/CV" has been selected from the SETUP button's 03C Battery Type menu.*

Constant Voltage appears on LCD. PWR (green) and CHG (green) LEDs are on solid. FAULT (red) LED is off, and INV (green) LED could be on or off.

Figure 5-15, Constant Voltage Mode

- **Constant Voltage (CVoltage)** – This mode begins when the *CV Ch Volts* is reached (determined by the settings under the SETUP button's *03C Battery Type: CC/CV* menu) while in the Constant Current charge mode. During this stage, the DC charging current decreases in order to maintain the absorb voltage setting. This charge stage continues until the *03D Absorb Done* (*Time*, *Amps*, or *SOC*) or *03E Max Charge: Time* setting is reached.

Note: *This status only displays if "CC/CV" has been selected from the SETUP button's 03C Battery Type menu.*

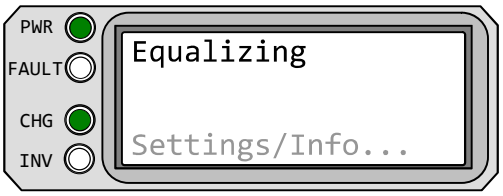

Equalizing appears on LCD. PWR (green) and CHG (green) LEDs are on solid. FAULT (red) LED is off, and INV (green) LED could be on or off.

Figure 5-16, Equalizing Mode

- **Equalizing (Equalize)** – This display indicates the charger is delivering the equalize voltage to the batteries based on the equalize voltage from Table 3-1 for your battery type.

Equalize charging can be enabled by the ON/OFF CHARGER button—if the SETUP button's *03C Battery Type* setting allows. Equalization charging can only be enabled while the charger is in Float Charge, Full Charge, or Silent Charge mode. To turn on Equalize charging, ensure the LCD display reads *"Float Charging"*, *"Full Charge"* or *"Silent"*, and then press and hold down the ON/OFF CHARGER button (about 5 seconds) until the LCD screen displays *"Equalizing"*.

The Equalize charge continues for four hours and then automatically stops and returns to the previous charge mode. The Equalize charge can be manually stopped by pressing and holding down the ON/OFF CHARGER button (about 5 seconds) until the LCD screen leaves *"Equalizing"* and then leaves "*Charger Standby*" and shows the previous charge mode (i.e., Float Charge, Full Charge, or Silent Charge mode).

WARNING: Equalizing produces hydrogen and oxygen gas. To avoid explosions, ensure the battery compartment has adequate ventilation in order to dissipate this gas.

CAUTION: During Equalizing mode, the batteries begin gassing and bubbling vigorously—which consumes water. Ensure each cell has adequate distilled water levels prior to equalizing, and add water as needed after equalizing.

CAUTION: Ensure your batteries can be equalized. Only do so if permitted by your battery manufacturer or dealer. Performing an Equalize charge on batteries other than liquid lead acid or certain AGM types could permanently damage them. Contact your battery manufacturer for their recommendations.

CAUTION: Ensure the DC loads are not be damaged by the higher voltage applied to the batteries during the Equalize charge. If in doubt, disconnect the loads to prevent.

Info: Even though equalization charging can be enabled if the GEL or AGM2 battery type is selected (under the SETUP menu's *03C Battery Type* setting) The voltage does not increase above the absorption voltage level, which effectively does not allow an equalization charge for these two battery types.

How often should I equalize? Some experts recommend that heavily used batteries should be equalized periodically, ranging anywhere from once a month to once or twice per year. Other experts only recommend equalizing when the cells have a low specific gravity, or when the difference between any individual cell has a specific gravity reading greater than .015 after being fully charged. Contact your battery manufacturer for their recommendations.

How long should I equalize? While the batteries are gassing, monitor the specific gravity readings every hour. When the specific gravity readings no longer increase, the Equalization charge is complete and should be stopped.

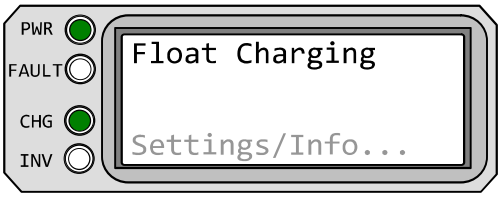

Float Charging appears on LCD. PWR (green) LED is on solid. CHG (green) LED is typically on solid, but may blink. FAULT (red) LED is off, and INV (green) LED could be on or off.

Figure 5-17, Float Charging Mode

- **Float Charging (Float)** – In Float Charging mode, the charger reduces the charge voltage and tries to maintain the batteries at the float charge voltage setting. This is determined by the SETUP menu's *03C Battery Type* setting as shown in Table 3-1.

Info: If the battery voltage falls ≤12.1 VDC (12-volt models), ≤24.2 VDC (24-volt models) or ≤48.4 VDC (48-volt models); the unit initiates bulk charging.

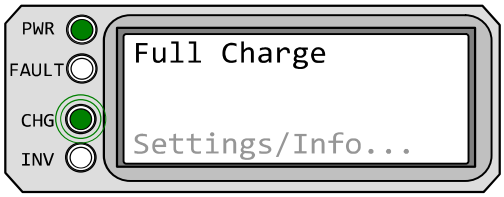

Full Charge appears on LCD. PWR (green) LED is on solid. CHG (green) LED blinks. FAULT (red) LED is off, and INV (green) LED could be on or off.

Figure 5-18, Full Charge Mode

- **Full Charge (Full Chg)** – This status indicates the charger is in Battery Saver™ mode. This mode maintains the batteries without overcharging, and prevents excessive loss of water in flooded batteries, or drying out of GEL/AGM batteries. After four hours of Float charging, the charger turns off and displays *"Full Charge"* (charger in Battery Saver™ mode). If the battery voltage drops to ≤12.6 (12v models), ≤25.2 (24v models) or ≤50.4 (48v models), the charger automatically initiates another four hours of Float charging. This cycle helps to ensure the batteries are maintained and continues as long as AC power is continuously connected to the AC input. "*Full Charge*" only displays if *Multi-Stage* is selected from the *03F Final Charge Stage* menu.

Load Support AAC appears on LCD. PWR (green) LED is on solid and CHG (green) LED blinks. FAULT (red) LED is off, and INV (green) LED is on solid.

Figure 5-19, Load Support AAC Mode

- **Load Support AAC (LS-AAC)** – This display indicates the Load Support (Amps AC) feature is active because the inverter loads are requiring more power than the incoming AC source can provide on its own. The inverter pulls the additional current needed for the loads from the inverter batteries to keep the incoming AC current from exceeding the *SETUP: 03A AC Input Amps* setting.

Info: The *Load Support AAC* feature operates in parallel with the AC input to support the inverter loads and is only available on MSH Series inverter/chargers. It is only active when the AC input is connected and the inverter is enabled (INV LED is on).

Info: When the inverter is in Charge mode, the battery current (under the *METER/01B Inv/Chg DC Amps* menu) is normally a positive value to show charging. However, in Load Support AAC mode, the battery current reading is a negative number to indicate how much current is being removed from the inverter batteries. The inverter batteries continue to provide current to assist the AC input current until the battery reaches 0.5 volts (12-volt systems), 1.0 volts (24-volt systems), and 2.0 volts (48-volt systems) above the *SETUP: 02B LBCO Volts* setting.

Load Support VDC appears on LCD. PWR (green) LED is on solid and CHG (green) LED blinks. Fault (red) LED is off, and INV (green) LED is on solid.

Figure 5-20, Load Support VDC Mode

- **Load Support VDC (LS-VDC)** – This display indicates the Load Support (Volts DC) feature is active because an external DC source (solar, wind, etc.,) is providing more current than needed—causing battery voltage to rise. The inverter/charger reduces incoming AC current to keep the battery voltage from rising above the temperature-compensated *SETUP: 03C Battery Type* setting.

Info: The *Load Support VDC* feature operates in parallel with the AC input to support the inverter loads and is only available on MSH Series inverter/chargers. This feature is only active in Absorb, Float, EQ or Constant Voltage charge modes and when the inverter is enabled (INV LED is on); it is deactivated if the charger is in Charger Standby.

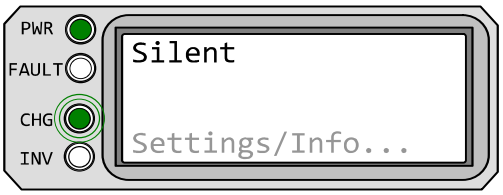

Silent appears on LCD. PWR (green) LED is on solid and CHG (green) LED blinks. FAULT (red) LED is off, and INV (green) LED could be on or off.

Figure 5-21, Silent Mode

- **Silent** – This appears at the end of the Absorb charge stage if *Silent* is selected from the *SETUP: 03F Final Charge Stage* menu, or at the end of the Constant Voltage stage [if *CV Chg Done Time* (or *Amps*) is selected from the *SETUP: 03C Battery Type: CC/CV* menu]. In Silent mode, the charger is not actively charging but does monitor the battery voltage. If the voltage reaches the *Set DC Volts to ReBulk* setting (per the *03F Final Charge Stage* menu), or the *Set DC Volts to Recharge* setting (per the *03C Battery Type: CC/CV* menu), the charger restarts another charge cycle and then transitions back into Silent mode at the end of the Absorb (or Constant Voltage) charge cycle.

5.3.3 Secondary Scrolling Status Messages

These displays alternate with the inverter's primary status to indicate other pertinent messages.

Note: *Depending on circumstances, the lighting sequence of the LED indicators may vary as there can be several secondary status messages scrolling at any one time.*

AC In – Disabled appears on LCD. PWR (green) LED is on solid and CHG (green) LED is blinking.

Figure 5-22, AC In – Disabled Mode

- **AC In – Disabled** – AC power is present at the inverter's AC input, but the inverter/charger is prevented from connecting to any incoming AC because the *AC In – Disabled* setting is selected from the *CTRL: 01 AC In Control* menu.

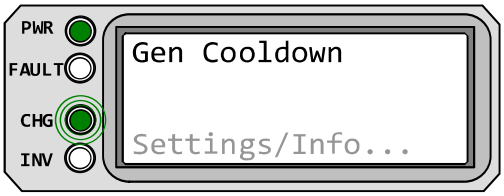

Gen Cooldown appears on LCD. PWR (green) LED is on solid and CHG (green) LED is blinking.

Figure 5-23, Gen Cooldown Mode

- **Gen Cooldown** – The ME-AGS-N has commanded a generator to run, but the inverter does not connect to the generator's AC output until the generator cooldown time is complete.

Note: *Requires the optional ME-AGS-N Auto Gen Start module to be connected.*

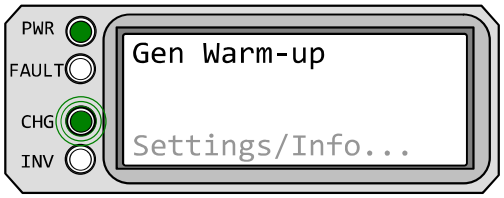

Gen Warm-up appears on LCD. PWR (green) LED is on solid and CHG (green) LED is blinking.

Figure 5-24, Gen Warm-up Mode

- **Gen Warm-up** – The ME-AGS-N has commanded a generator to run, but the inverter does not connect to the generator's AC output until the generator warm-up time is complete.

Note: *Requires the optional ME-AGS-N Auto Gen Start module to be connected.*

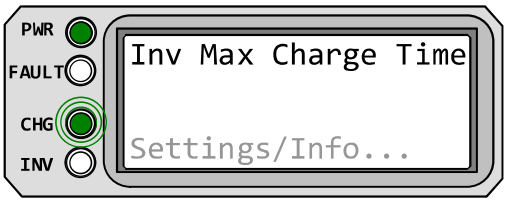

Inv Max Charge Time appears on LCD. PWR (green) LED is on solid and CHG (green) LED is blinking.

Figure 5-25, Inv Max Charge Time Mode

- **Inv Max Charge Time** – This display indicates the Max Charge Time safety feature was enabled because the Absorption charge was longer than the *Max Charge: Time* setting.

<u>If *SETUP/03C Battery Type: CC/CV* is selected</u>: The charger was forced to transition to the Silent charge stage because the charger had been in Constant Current and Constant Voltage charge modes longer than the *Max Charge: Time* setting [under the *Chg Done Time* (or *Amps*) selection].
<u>If *SETUP/03C Battery Type: CC/CV* is not selected</u>: The charger was forced to transition to the final charge stage (Float, Silent, or Full Charge) as set under the SETUP button's *03F Final Charge Stage*. This safety feature occurred because the charger had been in Bulk, Absorption, or EQ charge modes longer than the *Max Charge: Time* setting.

Info: The Inv Max Charge Time safety feature uses the time accumulated under the *METER: 03A Charge Time* display to determine the total charge time.

Info: The Inv *Max Charge: Time* display can be reset by either reconnecting AC to the inverter, or by pressing the CTRL button and enabling the "*Start Bulk*" option under the *CTRL: 02 Charger Control* menu—which initiates another charge cycle (Bulk, EQ, or Constant Current).

Info: The timer for the Inv *Max Charge: Time* menu runs when the battery voltage is greater than 0.2 volts above the float voltage setting.

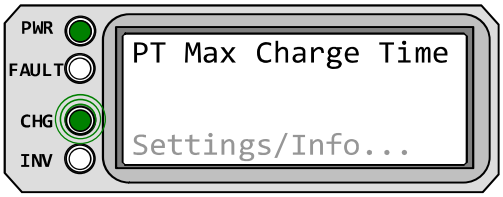

PT Max Charge Time appears on LCD. PWR (green) LED is on solid and CHG (green) LED blinks.

Figure 5-26, PT Max Charge Time

- **PT Max Charge Time** – This display indicates the PT Max Charge Time safety feature was enabled because the charge time was longer than the PT *Max Charge: Time* setting.

Info: The PT Max Charge Time safety feature uses the time accumulated under the *METER: 03A Charge Time* display to determine the total charge time.

Info: The PT *Max Charge: Time* display can be reset by either reconnecting AC to the inverter, or by pressing the CTRL button and enabling the "*Start Bulk*" or "*Start EQ*"option under the *CTRL: 05A PT Chg Ctrl* menu—which initiates another charge cycle (Bulk, EQ, or Constant Current).

Info: The timer for the PT *Max Charge: Time* menu runs when the battery voltage is greater than 0.2 volts above the float voltage setting.

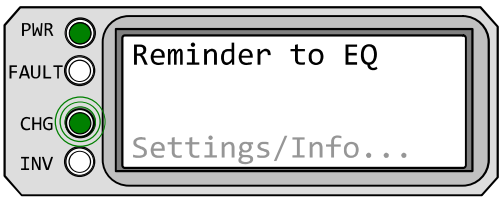

Reminder to EQ appears on LCD. PWR (green) LED is on solid and CHG (green) LED blinks.

Figure 5-27, Reminder to EQ Mode

- **Reminder to EQ** – This display indicates it is time to EQ the batteries. This occurs when the enabled *SETUP: 01I Days to remind when to EQ* setting has exceeded the # of days.

Info: The Reminder to EQ display is reset by initiating an EQ charge cycle, or by turning the *SETUP: 01I Days to remind when to EQ* setting to *OFF*.

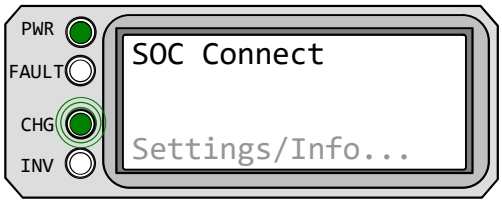

SOC Connect appears on LCD. PWR (green) LED is on solid and CHG (green) LED is blinking.

Figure 5-28, SOC Connect Mode

- **SOC Connect** – AC power is present at the inverter's AC input, but not allowed to connect. The battery bank's State of Charge needs to reach the *Connect* SOC setting from the *SETUP: 02E AC In – SOC* menu in order for the inverter/charger to connect to the incoming AC.

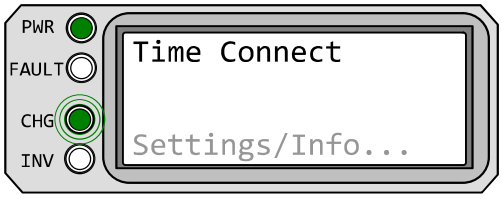

Time Connect appears on LCD. PWR (green) LED is on solid and CHG (green) LED blinks.

Figure 5-29, Time Connect Mode

- **Time Connect** – AC power is present at the inverter's AC input, but not allowed to connect. The time of day needs to fall within the *Connect* time and the *Disconnect* time settings per the *SETUP: 02C AC In – Time* menu in order for the inverter/charger to connect to the incoming AC.

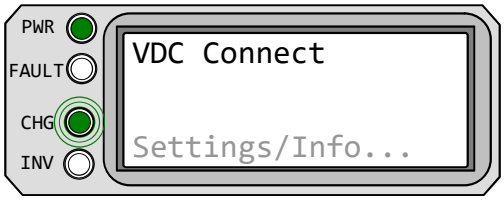

VDC Connect appears on LCD. PWR (green) LED is on solid and CHG (green) LED blinks.

Figure 5-30, VDC Connect Mode

- **VDC Connect** – AC power is present at the inverter's AC input, but not allowed to connect. The battery voltage needs to fall below the *Connect* volts setting from the *SETUP: 02D AC In – Volts DC* menu in order for the inverter/charger to connect to the incoming AC.

5.3.4 Fault Mode Messages

The FAULT LED flashes and a fault status is displayed when an abnormal condition is detected. To determine which port has the fault, press the PORT button or rotate the SELECT knob until the FAULT LED turns solid.

Info: Many of the faults automatically clear once the fault is resolved. Some require a manual restart. This requires the ON/OFF INVERTER button on the router to be pressed and released. Finally, if the fault does not clear, an inverter reset (see Section 6.2) or power-down (see Section 6.3) may be required.

5.3.4.1 System Fault Messages

These fault messages are usually caused by an external issue that directly affects the inverter/charger system.

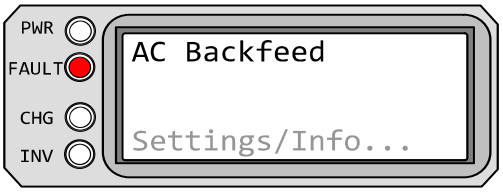

AC Backfeed appears on the LCD and the FAULT (red) LED is on. The PWR (green), CHG (green), and INV (green) LEDs are off.

Figure 5-31, AC Backfeed Mode

- **AC Backfeed (Backfeed)** – This fault message causes the inverter to shut down because AC voltage from an external AC source has been detected on the inverter's AC output. When the unit shuts down because of this fault condition, an inverter reset or power-down is required to resume operation (see Sections 6.2 & 6.3).

Remedy: This fault usually occurs because the inverter's AC output wiring is connected to the incoming AC source (either hardwired or through a switch/breaker). When this fault happens, all system wiring should be re-checked to ensure the incoming hot and/or neutral wires are not in some way connected to the AC output.

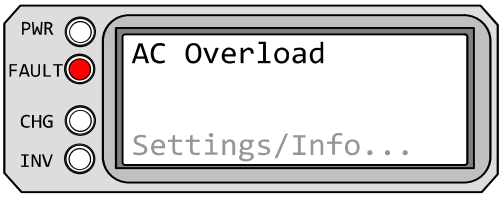

AC Overload appears on the LCD and the FAULT (red) LED is on. The PWR (green), CHG (green), and INV (green) LEDs are off.

Figure 5-32, AC Overload Fault

- **AC Overload (AC OverL)** – This fault message displays when the AC load on the inverter/charger's output has exceeded the inverter's AC current protection limits. If the overload condition lasts <10 seconds, the unit automatically restarts and resumes operation. However, if the overload occurs for >10 seconds, the unit shuts down and requires a manual restart.

Remedy: This fault occurs because the connected AC loads are larger than inverter's output capacity, there is a wiring short on the output, or the output wires are incorrectly installed. Once the AC loads are reduced or the output wiring is corrected, the inverter can be restarted after a manual restart.

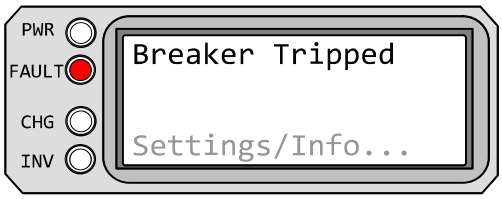

Breaker Tripped appears on the LCD and the FAULT (red) LED is on. The PWR (green), CHG (green), and INV (green) LEDs are off.

Figure 5-33, Breaker Tripped Fault

- **Breaker Tripped (Brk Trip)** – The AC input breaker on the inverter/charger has opened due to excess current flow through the inverter to the AC loads.

Remedy: After reducing the AC loads on the inverter's output, push in the inverter's AC input circuit breaker to reset and resume operation.

Dead Batt Charge appears on the LCD and the FAULT (red) LED is on. The PWR (green), CHG (green), and INV (green) LEDs are off.

Figure 5-34, Dead Battery Charge Fault

- **Dead Battery Charge (DeadBatt)** – This fault indicates a discharged battery bank, or the battery bank is disconnected from the inverter. The unit is attempting to enter Charge mode, but has detected less than 7 volts (12-volt models), 14 volts (for 24-volt models) or 28 volts (for 48-volt models) on the battery bank. This fault continues until current is able to flow into the battery from the battery charger. Once this happens, the fault automatically resets.

Remedy: Remove all incoming AC to the inverter's input, then check DC voltage on the inverter's DC terminals and compare it with the DC voltage on the battery bank. These two voltages should be very close (<0.5 VDC difference). If not, check to ensure all connections are tight and the fuse/circuit breaker between the inverter and battery bank is good.

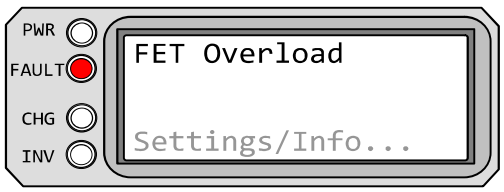

FET Overload appears on the LCD and the FAULT (red) LED is on. The PWR (green), CHG (green), and INV (green) LEDs are off.

Figure 5-35, FET Overload Fault

- **FET Overload (FETOverL)** – This fault message indicates the inverter/charger has shut down because the internal FETs (Field Effect Transistors) have quickly exceeded a safe operating temperature. When the FETs cool, the unit requires a manual restart to resume operation.

Remedy: If the fault continues, disconnect all AC power to the inverter's input, remove the inverter's AC output wires and reset the inverter (see Section 6.2). After the reset, turn the inverter on. If the fault does not clear after the reset, the inverter may require service.

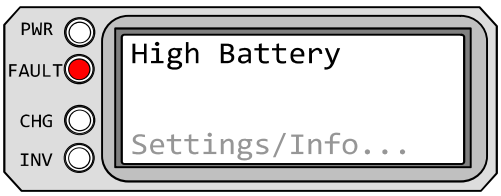

High Battery appears on the LCD and the FAULT (red) LED is on. The PWR (green), CHG (green), and INV (green) LEDs are off.

Figure 5-36, High Battery Fault

- **High Battery (HighBatt)** – The inverter has turned off because the battery voltage is at a very high level. This fault message displays and the FAULT (red) LED turns on when the battery voltage is above the High Battery Cut-Out (HBCO) value. This fault automatically restarts and resumes operation when the battery voltage drops 0.3 VDC (12-volt models), 0.6 VDC (24-volt models), or 1.2 VDC (48-volt models) below the HBCO value.

Info: The HBCO value depends on the inverter version and model. Normally, the HBCO value for modified sine wave inverters (i.e., ME/MM/RD Series) is 16 VDC (12v models) or 32 VDC (24v models); and, the HBCO value for pure sine wave inverters (i.e., MS/MMS/MSH Series) is 17 VDC (12v models), 34 VDC (24v), or 68 VDC (48v).

Remedy: This fault usually only occurs when an external DC charging source is charging the inverter's battery bank. Turn off any other additional charging source to allow the DC voltage level to drop.

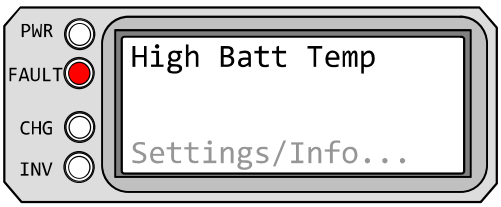

High Batt Temp appears on the LCD and the FAULT (red) LED is on. The PWR (green), CHG (green), and INV (green) LEDs are off.

Figure 5-37, High Battery Temperature

- **High Battery Temperature (HBatTemp)** – This fault message indicates the inverter/charger has shut down because the Battery Temperature Sensor (BTS) has reached a temp >129°F/54°C.

Remedy: Once the BTS has cooled down (≤120°F/49°C), it automatically restarts and continues operation. As a precaution, check the BTS location; if placed on a battery, ensure they are not overheated, or that the BTS hasn't been placed in a hot area or near a hot device. If neither of these are the issue, then monitor the *BTS* meter under the *TECH: 01 INV Temperatures* menu. If this reading is above 129°F/54°C, remove the BTS from the inverter BTS port. If the Batt Temp Sensor reading goes to 77°F/25°C, replace the BTS. If the reading does not go to 77°F/25°C, then inspect the BTS port for cleanliness and/or have the inverter/charger serviced.

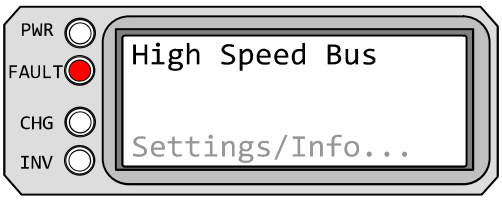

High Speed Bus appears on the LCD and the FAULT (red) LED is on. The PWR (green), CHG (green), and INV (green) LEDs are off.

Figure 5-38, High Speed Bus Fault

- **High Speed Bus (BusFault)** – This fault indicates a communication error has occurred between the inverter's internal onboard microprocessors. When the unit shuts down because of this fault condition, perform an inverter reset or power-down the inverter (Sections 6.2 & 6.3).

Remedy: After performing the reset, turn the inverter on. If the fault does not clear after the reset, the inverter may require service.

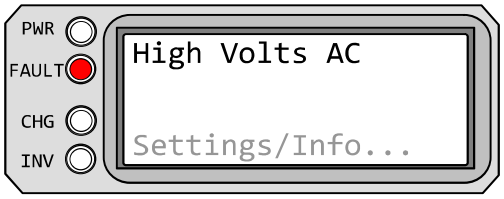

High Volts AC appears on the LCD and the FAULT (red) LED is on. The PWR (green), CHG (green), and INV (green) LEDs are off.

Figure 5-39, High Volts AC Fault

- **High Volts AC (High VAC)** – This fault causes the AC input to be disabled due to a very high AC voltage (>145 VAC; or >290 volts for export inverters) has been detected on the AC input.

Remedy: Remove all AC power from the inverter's AC input for 15 minutes to reset this fault. Ensure only 120VAC power is connected to each of the inverter's AC inputs.

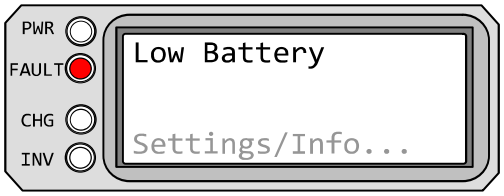

Low Battery appears on the LCD and the FAULT (red) LED is on. The PWR (green), CHG (green) and INV (green) LEDs are off.

Figure 5-40, Low Battery Fault

- **Low Battery (Low Batt)** – This fault displays when the battery voltage drops below the SETUP menu's *02B LBCO Volts* setting for more than one minute, and only occurs if the inverter was "Inverting" or "Searching".

Remedy: This fault automatically restarts and resumes operation when the battery voltage rises to ≥12.5 VDC (12V models), ≥25 VDC (24V models), or ≥50.0 VDC (48V models); or, if AC power—such as utility power or a generator—is connected to the inverter/charger's input and battery charging begins.

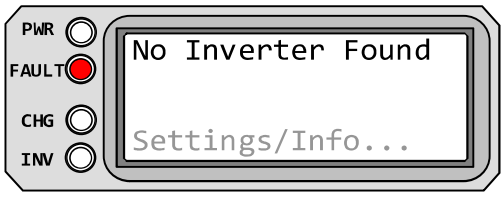

No Inverter Found! appears on the LCD and the FAULT (red) LED is on. The PWR (green), CHG (green) and INV (green) LEDs are off.

Figure 5-41, No Inverter Found!

- **No Inverter Found! (Empty)** – This fault indicates communication data from the inverter's Remote (blue) or Network (green) connection to the router's remote port (P1-P6) is missing.

Remedy: Check for the following conditions that can cause a "No Inverter Found!" fault.

a) The router's remote port (P1-P6) that is connected to the inverter may be bad, try a different remote port on the router to see if communication is restored.

b) The remote cable from the inverter to the router's remote port is either the incorrect cable, connected incorrectly, or has gone bad. See Section 2.4 for cable information.

c) If a Tfmr Overtemp fault occurs for more than 10 seconds, the inverter automatically resets. After the inverter resets, the display changes from "*Tfmr Overtemp*" to "*No Inverter Found!*". View the *TECH: 05 Fault History* menu to determine if a Tfmr Overtemp fault occurred; if this is the case, the inverter requires service/repair.

d) The communications IC in the router may be bad, try another router display.

e) Reconnect the router from the inverter's Remote (blue) port to the Network (green) port. If this does not fix it, then the inverter may need servicing.

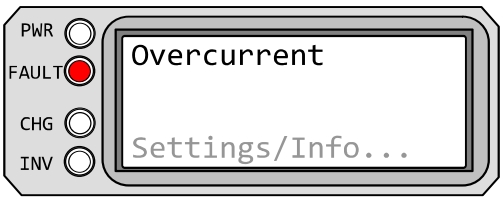

Overcurrent appears on the LCD and the FAULT (red) LED is on. The PWR (green), CHG (green), and INV (green) LEDs are off.

Figure 5-42, Overcurrent Fault

- **Overcurrent (Overcrnt)** – This fault may be due to an excessive AC load, and causes the inverter to shut down to protect internal power components. If the overload condition lasts for <10 seconds, the unit automatically restarts and resumes operation. However, if the overcurrent condition occurs for >10 seconds, the unit shuts down and requires a manual restart.

Remedy: This fault usually occurs because the connected AC loads are larger than the inverter's output capacity, there is a wiring short on the AC output, or the wires are incorrectly wired. Once the AC loads are reduced or the output wiring is corrected, manually restart the inverter to resume operation. If this fault condition continues after all of these recommendations, perform a inverter reset (see Section 6.2).

Overtemp appears on the LCD and the FAULT (red) LED is on. The PWR (green), CHG (green), and INV (green) LEDs are off.

Figure 5-43, Overtemp Fault

- **Overtemp (OverTemp)** – This fault message indicates the inverter/charger has shut down because the internal power components (FETs and/or transformer) have exceeded their safe temperature operating range. Unit automatically restarts and continues operation once it cools.

Remedy: If the fault occurs while inverting, reduce the load on the inverter. If it occurs while charging, turn down the charge rate. If this fault happens often, ensure the inverter is not in a hot area, has proper ventilation, and the cooling fans are working.

Stuck Relay appears on the LCD and the FAULT (red) LED is on. The PWR (green), CHG (green), and INV (green) LEDs are off.

Figure 5-44, Stuck Relay Fault

- **Stuck Relay (Stuck Ry)** – This fault message displays when the inverter is "inverting", but has determined that the internal AC pass-thru relay (that should be open while inverting) is closed.

Remedy: The AC pass-thru relay is likely stuck—likely due to damage to the contacts from trying to handle currents greater than they are rated. This is usually caused by not protecting the relay from handling high continuous currents, or by switching high current inductive loads. The internal relay contacts are rated to handle 30 amps AC continuously and should be protected with a breaker sized no larger than 30 amps. If you are connected to an AC source (grid or generator) and running large inductive loads (e.g., pumps, motors, etc.,) on the inverter output, turn those particular loads off prior to removing the AC input source. This fault requires an inverter or power-down to resume operation (see Sections 6.2 & 6.3).

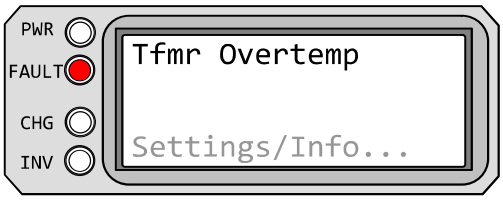

Tfmr Overtemp appears on the LCD and the FAULT (red) LED is on. The PWR (green), CHG (green), and INV (green) LEDs are off.

Figure 5-45, Tfmr Overtemp Fault

- **Tfmr Overtemp (Tfmr OT)** – This fault message displays when the transformer temperature is >266°F/130°C, causing the Thermal Cut-Out (TCO) sensor on the transformer to open. If the TCO sensor stays open after 10 seconds, the inverter auto-resets. This fault also happens if any line in the TCO sensor is open.

Remedy: Remove all power (AC and DC) to the inverter and let it cool down. After the inverter has cooled down, reconnect the DC side (batteries). If:
a) the "Tfmr Overtemp" fault returns or the display reads "No Inverter Found!", then the inverter requires service/repair.
b) the inverter is now working, ensure the inverter is in a cool location, has adequate ventilation, and the internal cooling fans are operational.

Unknown Fault ## appears on the LCD and the FAULT (red) LED is on. The PWR (green), CHG (green), and INV (green) LEDs are off.

Figure 5-46, Unknown Fault ##

- **Unknown Fault ## (Fault ##)** – This fault message displays when the inverter/charger has sent a fault code that cannot be determined by the router.

Remedy: Call the Technical Support department at DMX Power (800-553-6418) for assistance in determining and understanding the actual fault status.

5.3.4.2 Stacking Fault Messages

A fault condition may occur when multiple inverters are stacked in parallel—using the router—that is not possible on a single inverter installation. Refer to the following fault messages to help troubleshoot the inverters.

StackClock Fault appears on the LCD and the FAULT (red) LED is on. The PWR (green), CHG (green) and INV (green) LEDs are off.

Figure 5-47, StackClock Fault

- **StackClock Fault (StkClock)** – 1. There is a stacker cable problem; or, 2. One inverter is losing synchronization with the other inverter.

Remedy: Ensure you are using the RJ45 cables supplied with the router for parallel stacking. Check to make sure you hear an audible "click" when plugging in the RJ45 cables.

Info: This fault has been known to occur when a Magnum accessory is plugged into the Stack Port, but the installation is not using multiple inverters in a stacked configuration. If this occurs, perform an inverter reset (see Section 6.2).

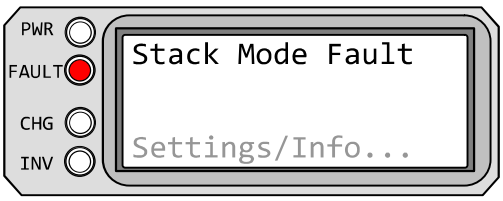

Stack Mode Fault appears on the LCD and the FAULT (red) LED is on. The PWR (green), CHG (green), and INV (green) LEDs are off.

Figure 5-48, Stack Mode Fault

- **Stack Mode Fault (Stk Mode) –** This unit has detected a problem with another stacked inverter, check the other units for a fault condition.

Remedy: This fault automatically clears when the fault with the other inverter is corrected.

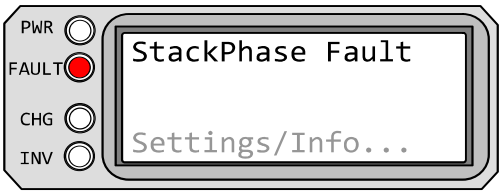

StackPhase Fault appears on the LCD and the FAULT (red) LED is on. The PWR (green), CHG (green), and INV (green) LEDs are off.

Figure 5-49, StackPhase Fault

- **StackPhase Fault (StkPhase) –** 1. The AC input wiring is incorrect; or, 2. One phase was lost from the AC input source; or, 3. One of the inverter's internal transfer relays is bad; or, 4. The inverter's AC input circuit breaker may be open.

Remedy: If this fault doesn't clear after checking these four recommendations, perform an inverter reset (Section 6.2).

5.3.4.3 Internal Fault Messages

The inverter continually monitors several internal components. If a condition inside the inverter occurs that does not allow proper operation, the inverter shuts down to protect itself. To clear these "internal" faults, the inverter requires an inverter reset.

Remedy: Perform an inverter reset (see Section 6.2). After resetting the inverter, press the ON/OFF INVERTER button to turn the inverter on and verify the fault has cleared. If the internal fault remains, the inverter requires repair at a DMX Power Authorized Service Center.

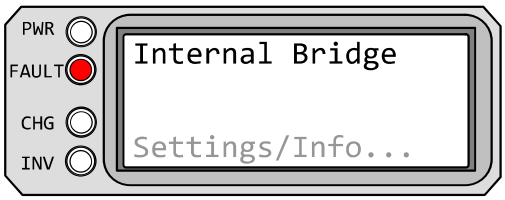

Internal Bridge appears on the LCD and the FAULT (red) LED is on. The PWR (green), CHG (green), and INV (green) LEDs are off.

Figure 5-50, Internal Bridge Fault

- **Internal Bridge (Int Brdg)** – This fault message displays when the FET bridge shuts down after the inverter has been inverting—the inverter output circuit can no longer detect any AC output voltage or current.

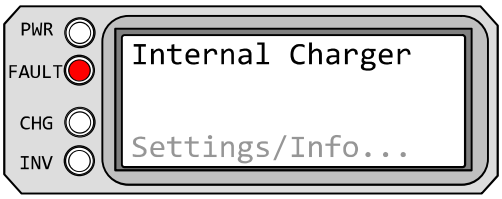

Internal Charger appears on the LCD and the FAULT (red) LED is on. The PWR (green), CHG (green), and INV (green) LEDs are off.

Figure 5-51, Internal Charger Fault

- **Internal Charger (Int Chgr)** – This fault message displays when the FET bridge shuts down because the charger circuit is trying to provide maximum current, but is not detecting any current or voltage rise to the battery bank.

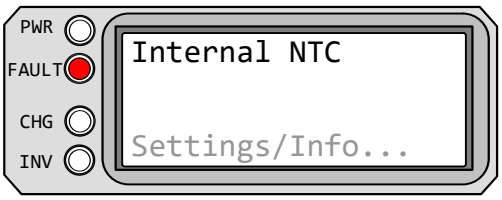

Internal NTC appears on the LCD and the FAULT (red) LED is on. The PWR (green), CHG (green), and INV (green) LEDs are off.

Figure 5-52, Internal NTC Fault

- **Internal NTC (Int NTC)** – This fault displays when the internal NTC (Negative Temperature Coefficient) sensor suddenly senses a very large but unexpected temperature change.

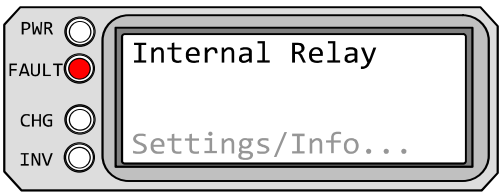

Internal Relay appears on the LCD and the FAULT (red) LED is on. The PWR (green), CHG (green), and INV (green) LEDs are off.

Figure 5-53, Internal Relay Fault

- **Internal Relay (IntRelay)** – This fault displays when the internal AC transfer relay is not closed while charging.

5.3.5 LED Indicator Guide

Use the LEDs & LCD display to determining the operating status of your inverter/charger.

Table 5-1, LED Indicator Guide

LED	Status	Meaning
PWR (green)	OFF	1) Inverter disabled; 2) Router's in Power Save mode – press any button to activate LEDs; 3) No power to router (check router cable or power to inverter); or, 4) No AC power at the inverter's AC output.
	ON	AC power is available from inverter, utility, or generator at the inverter's AC output terminals.
FAULT (red)	OFF	Normal operation – no fault condition.
	BLINKING	A fault condition has been detected. Press the PORT button or rotate the SELECT knob until the FAULT LED turns solid.
	ON	A fault condition has been detected. Check the LCD display to find and correct the cause.
CHG (green)	OFF	1) Router is in Power Save mode – press any button to activate LEDs; or, 2) Charger off – no utility or AC generator present.
	ON	In Charge mode – see the LCD display to determine charge status.
	BLINKING, displays "*Charger Standby*"	The charger is in Charger Standby mode. This occurs when the ON/OFF CHARGER button is pressed to disable the charger.
	BLINKING, displays "*Full Charge*" or "*Silent*"	The charger is in Battery Saver mode. This mode monitors battery voltage level and only charges if the battery voltage decreases to a low level. Silent mode automatically starts charging when the ReBulk setting is reached.
	BLINKING, displays "*Max Charge Time*"	This indicates that the Max Charge Time safety feature has been enabled causing the charger to enter the Float or Silent charge mode to prevent the charger from holding the batteries at a high voltage for a prolonged period of time. ***Note:*** *To reset the green CHG LED and the Max Charge Time display, either reconnect the AC input and start the "Charging" status, or start another Bulk, EQ, or Constant Current charge cycle.*
	BLINKING, displays "*Reminder to EQ*"	This is provided as a reminder that it is time to equalize the batteries. The CHG indicator comes on when the *SETUP: 01I Days to Remind when to EQ* setting has been enabled and the # of days has been exceeded. ***Note:*** *To reset the green CHG LED and the EQ Reminder display, start an EQ charge.*
	BLINKING, display shows a charging status (i.e., Bulk, Absorb, Float)	The charger current is automatically decreased because: 1) Charger Back-off – the inverter's internal temperature is getting hot, current is decreased to reduce/maintain temperature; or, 2) Low AC Input Voltage – the input AC voltage is <85 VAC, charger is disabled to help stabilize incoming AC voltage to prevent AC disconnect.
	BLINKING, with no charge status	The inverter is detecting AC voltage (from utility or an AC generator) on the inverter's AC input terminals.
INV (green)	OFF	1) Inverter is disabled; or, 2) Router is in Power Save mode – press any button to activate LEDs.
	ON	Inverter is enabled – 1) Supplying AC power on the output; or, 2) If both INV and CHG LEDs are on, then the inverter input is connected to utility or generator power and is in Standby mode. The inverter automatically powers the AC loads if the incoming AC power is lost.
	BLINKING	Inverter in Search mode (AC load below SETUP: *02A Search Watts* setting).

6.0 Troubleshooting

If the router is not functioning correctly, use the following table to help find solutions.

Table 6-1, Router Troubleshooting Guide

Symptom	Possible Cause	Solution
Display shows unrecognizable letters or symbols.	Static electricity may have been discharged into the LCD display.	**Refresh Display:** To refresh the display, press and hold the METER button until the System Home screen shows (~3 seconds).
LCD text display is locked-up, pressing any button has no response.	The connections on the ends of the communication cable are not making a good contact.	**Reset router:** 1) Disconnect router cable from inverter for 5 seconds and reconnect; 2) Check cable connections on the router (see Figures 2-6 & 2-7). **Important:** Ensure the RJ14 connector is pushed into the correct port. You should feel/hear "click" when the connection is made.
	Router not getting sufficient power from inverter.	Ensure inverter batteries are connected and inverter is operating correctly. Inverter should be able to invert and power AC loads from batteries (ensure no AC power is connected to the inverter AC inputs).
LEDs and backlight are off.	Router is in Power Save mode.	Press any button to reactivate router (or turn Power Save mode to *OFF* to keep the LEDs and backlight on).
Router is non-functional (no lights, no text on LCD display, and no response when pressing any button).	Communication cable bad or not correctly connected from remote (or network) port on inverter to a remote port on router.	Check communications cable from inverter to router, ensure: 1) It is connected to the router remote port on one end and the other end is connected to the Remote (or Network) port on the inverter. 2) The correct communications cable is used (a 4-conductor telephone cable may be substituted to determine if cable is good).
	Inverter is dead (i.e., not powered or connected to batteries).	Ensure inverter batteries are connected and inverter is operating correctly without any AC input power connected (can invert and power AC loads from batteries).

6.1 Troubleshooting Tips

6.1.1 Inverter Problems

- **Inverter turned on, green LED on inverter blinking, no output:** Inverter is in Search mode. Either defeat Search mode, if not needed, or turn on loads greater than the *02A Search Watts* setting.

6.1.2 Charger Problems

- **Unit won't transfer to Charge mode with AC applied:** Is CHG (charge) LED on router blinking? If not, then the charger does not recognize the incoming as AC being within acceptable limits. Measure the input AC voltage at the inverter input terminals, it should be 120VAC +/ 20 VAC (230VAC +/ – 40 VAC for export models). Also, check that the *03B Low VAC Dropout* setting on the router is 80 VAC or less (export models: 160 VAC or less). If the CHG LED is blinking, the transfer relay should be closing within 20-30 seconds, and the unit should begin charging. If the LED is on solid, the relay should be closed, and the charger should begin charging.

- **Transfer relay closes, then opens and continues to cycle:** AC voltage is too low, or has transients that drop the AC voltage momentarily. Change the *Low VAC Dropout* setting to 60 VAC (120VAC for export models) and check for improvements. If the cycling continues, back off the charge rate from 100% to 10%.

  This cycling may also be caused if the AC output of the inverter is connected to the inverter's AC input, check for proper input and output AC wiring.

- **Charger not charging even though CHG LED is on steady and the unit says "*Charging*":** Full charge rates are not obtained in "Charging" mode, only after this mode changes to a normal charge stage (e.g., Bulk Charging, Absorb Charging, Float Charging, etc.).

- **Charger not charging even though CHG LED is on steady and the unit says "*Bulk Charging*" (or "*Absorb Charging*"):** Check the DC amps meter and DC voltmeter on the router display. It should be 80% or more of rated charge current if the battery voltage is under 14.0 VDC (28.0 VDC on 24-volt models or 48.0 VDC for 48-volt models). If not, check the *SETUP: 03E Max Charge: Rate* setting and verify it is 80% or greater. Still low charge rate? Remove all the inverter AC loads and check the *SETUP: 03A AC Input Amps* setting. The *SETUP: 03A AC Input Amps* setting must be 15 amps (25 amps for 3kW unit) or greater to receive the full charge rate.

- **Charger says "*Float Charging*" not "*Bulk Charging*" when the AC is first plugged in:** Check DC voltmeter on the router display. If the battery is over 13.0 VDC (26.0 VDC for 24-volt models or 52.0 VDC for 48-volt models) then the battery was already charged and the charger automatically goes to Float Charging to keep from overcharging the batteries. Try the *Start Bulk* setting from the *CTRL: 02 Charger Control* menu.

- **Charge amps are lower than expected, or is 0 amps DC:** Measure input AC voltage and increase if the input voltage is under 90 VAC. The charge rate is reduced to keep the input voltage above 90 VAC. Also, check the *AC Input Amps* and the *Max Charge: Rate* settings to determine if the current is being limited.

- **Charger output voltage is different than expected:** This is normal when the Battery Temperature Sensor (BTS) is connected to provide temperature compensated battery charging. If the BTS is installed, the charge voltage settings increase if the temperature around the BTS is below 77°F/25°C and decrease if the temperature around the BTS is higher than 77°F/25°C.

6.2 Performing an Inverter Reset

Press and hold the Power ON/OFF button (see Figure 6-1) for approximately fifteen (15) seconds until the Charging/Inverting Status LED comes on and flashes. Once the flashing has begun, release the Power ON/OFF button. The Charging/Inverting Status LED goes off after the button is released. After the inverter reset is completed, press the Power ON/OFF button to turn the inverter ON.

Some older inverter models do not allow an inverter reset. If the inverter reset fails, you need to power-down the inverter using the procedure in Section 6.3 below. In either case, if an internal fault does not clear, the inverter requires repair at a DMX Power Authorized Service Center.

Info: The Power ON/OFF button is a small momentary type switch which operates by lightly pressing and releasing.

Info: All adjustable settings in the router (except *SETUP: 01B Screen Setup*, *CTRL: 03 Gen Control and TECH: 08 Show all Menus*—which revert back to default) are saved in non-volatile memory and are preserved until changed—even if an inverter reset is performed or if all power to the router or inverter is removed.

1. Press and hold the Power ON/OFF pushbutton for 15 seconds.
2. Watch the Charging/ Inverting Status LED, after approximately 15 seconds it should come on and flash rapidly to indicate the inverter has reset. The Status LED will go off after the pushbutton is released.

Figure 6-1, Performing an Inverter Reset

6.3 Powering Down the Inverter

Note: *The router is normally connected to multiple inverters. The procedure below should be performed on all the inverters in the system (all at once) to ensure a complete system power-down.*

To power-down the inverter:

1. Remove all AC power (utility or generator power) to the inverter.
2. Remove any accessories connected to the inverter and or/router.
3. Remove all DC power to the inverter (open all the inverter DC disconnects or disconnect the positive battery cable to the inverter).
4. Remove the router from the inverter—ensure the router display is blank.
5. After all accessory devices have been disconnected from the inverter(s) and the inverters have been disconnected from all power for 30 seconds, reconnect power to all inverters, reconnect all accessory devices and the router, and resume operation.

Info: If DC disconnects are not used, there may be a momentary spark when the positive battery cable is connected to the inverter's terminal. This is normal and indicates that the inverter's internal capacitors are being charged.

7.0 Updating the ME-ARTR Router's Firmware

Using a standard micro SD memory card, you can download and install updated firmware for your ME-ARTR router. Firmware updates are periodically available for download on our website (www.dmx-power.com). Firmware updates are provided to improve performance, fix issues, add new features or change functionality.

To update ME-ARTR Firmware:

1. Turn off/disconnect AC source so unit is not charging.
2. If unit is inverting, press on/off button to turn off inverter.
3. Record existing settings as these will be lost after updating.
4. Insert a blank MicroSD card (no larger than 32GB) into your computer (an adapter may be required).
5. Format MicroSD card to FAT32. (Instructions for Windows users only)
    a. Right click on MicroSD card folder.
    b. Left click "Format..."
    c. Under "File system" select FAT32 if not already selected.
    d. Press "Start" to format.
    e. Press "OK" to start formatting.
    f. Press "OK" after formatting is finished.
    g. Press "Close" to close the formatting window.
6. Download updated firmware from our website:
    https://www.magnum-dimensions.com/me-artr-advanced-remote
7. Save this file to your MicroSD card.
8. Remove MicroSD card from your computer and insert it into the MicroSD card slot of your ME-ARTR.
9. Press the "TECH" button of the ME-ARTR.
10. Rotate the Select Knob to "09 Load New Firmware".
11. Press and hold the Select Knob for 5 seconds (the timer will count down to 0).
12. Remove the MicroSD card from the ME-ARTR and reprogram any settings you recorded in step 3.

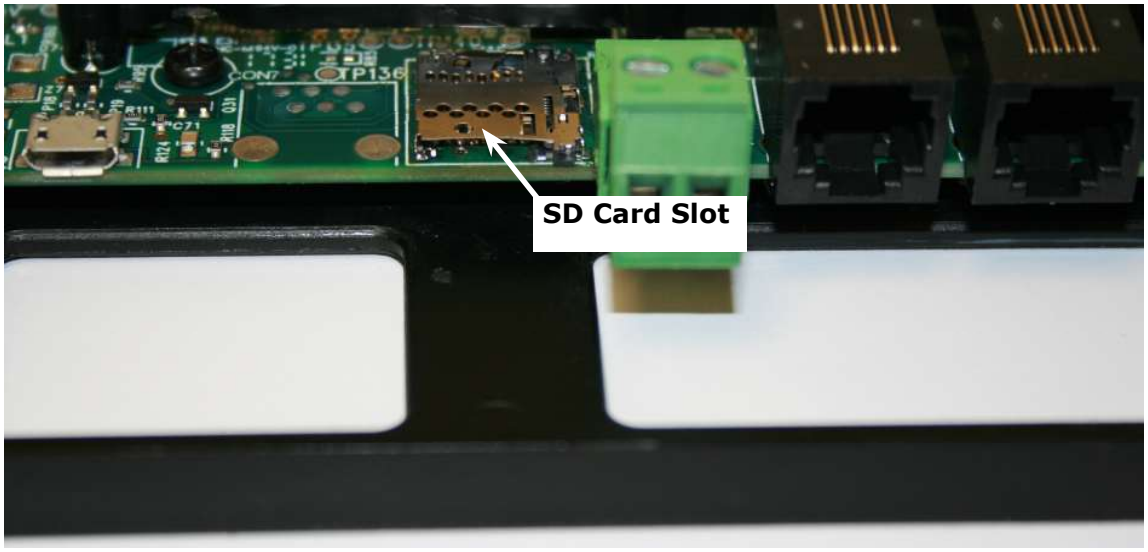

Figure 7-1, ME-ARTR Router's Firmware SD Card Slot

8.0 Using an AGS Module

The AGS-N menus in the ME-ARTR router under the CTRL, METER, SETUP, and TECH buttons allow you to customize and monitor operating parameters, and to help troubleshoot your autostart/autostop generator system. To configure and use the AGS with the ME-ARTR, refer to the mini-index below to direct you to the appropriate section.

8.1 ME-AGS-N Setup (with the ME-ARTR) page 82
8.2 ME-AGS-N Operation/Monitoring (with the ME-ARTR) page 94
8.3 ME-AGS-N Router Troubleshooting (with the ME-ARTR) page 105

IMPORTANT: The AGS must be a network version (ME-AGS-N) and must be connected and communicating with the ME-ARTR in order to set up and/or control the AGS. If the AGS is not communicating, "*No AGS Present*" appears when accessing the *SETUP/04 AGS Setup* or the *CTRL/03 Gen Control* menus, unless the *TECH: 08 Show all Menus* menu has been set to "*Yes*". Refer to Section 3.3.5 for more info on the *TECH: 08* menu.

Info: A ME-ARC can be directly connected to one of the router's communication ports (P1-P6). It can be used in a remote location as a remote on/off switch, and can assist in monitoring the system and controlling a generator that is connected to an AGS-N.

Info: When a ME-ARC is directly connected to the router, the ARC's CTRL button function is defeated. However, the *Gen Control* selection is in the ARC's FAVS menu, and the gen can be controlled via the ARC through the FAVS menu, but not through the CTRL menu. Even though you can activate the AGS (through the FAVS button), all the AGS's autostart/autostop settings must be set up in the ME-ARTR.

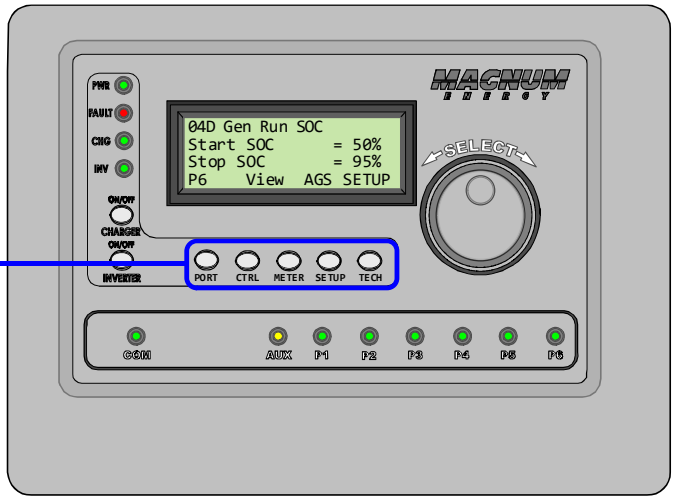

Figure 8-1, ME-ARTR's AGS Configuration Access Buttons

8.0.1 Software Differences Between AGS Versions

Even though the router provides a selection/feature or shows a setting, based on the version of your ME-AGS-N, this selection or setting may not be available. Use Table 8-1 to determine if your ME-AGS-N is compatible with the selection or setting you want to use.

Info: Refer to *TECH/02 Port Vers* (or *TECH/03 AccPort Versions*)—depending on what port the AGS is connected—to determine the software version in your AGS.

Table 8-1, Software Differences Between AGS Versions

AGS Menu (Button: Menu)	AGS Menu Selections/Settings	ME-AGS-N Required
CTRL: 03 Gen Control	OFF, ON, AUTO	≥Vers 5.0
METER: 04 AGS Meters		
04A AGS Status (Read Only)		≥Vers 5.0
04B DC Volts to AGS (Read Only)		≥Vers 5.0
04C Gen Run Time (Read Only)		≥Vers 5.2
04D AGS Sensor Temp (Read Only)		≥Vers 5.0
04E Since Run Days (Read Only)		≥Vers 5.0
04F Since 100% Days (Read Only)		≥Vers 5.3
04G Gen Hour Meter (Read Only)		≥Vers 5.3
SETUP: 04 AGS Setup		
04A Gen Run DC Volts	Start Volts = OFF, 9.0-15.9 (12V), 18.0-31.8 (24V), 36.0-63.6 (48V) VDC	≥Vers 5.0
	Stop Volts = 9.1-16.0 (12V), 18.2-32.0 (24V), 36.4-64.0 (48V), Float	
	Start/Stop Delay = 0-127 secs, 1-127 mins	
04B Gen Run Time	OFF, Start Daily = 12:00AM – 11:45PM	≥Vers 5.0
	Stop Daily = 12:00AM – 11:45PM	
04C Gen Run AC Amps*	OFF, Start AC Amps = 5-60 Amps	≥Vers 5.0
	Stop AC Amps = 4-59 Amps	
	Start/Stop Delay = 0-127 secs, 1-127 mins	
04D Gen Run SOC**	OFF, Start SOC = 20-99%	≥Vers 5.0
	Stop SOC = 21-100%	
04E Gen Run Temp	OFF, Ext Input, Start Temp = 65-95F (18-35C)	≥Vers 5.0
	Run Time = 0.5-25.5 Hrs	
04F Max Gen Run Time	OFF, 0.1-25.5 Hrs	≥Vers 5.2
04G Gen Quiet Time	OFF, Begin/End Time = 12:00AM-11:45PM	≥ Vers 5.0
	OFF, Topoff = 30, 60, 90, 120 Mins	
04H Gen Exercise	OFF, Days = 1-255 Days	≥Vers 5.0
	Start Time = 12:00AM-11:45PM	
	Run Time = 0.1-25.5 Hrs	
04I Gen No-Load Time	Warm-up/Cooldown = 0-127 secs, 1-127 mins	≥Vers 5.0
04J Gen 100% SOC**	OFF, Start Gen Days = 1-255 Days	≥Vers 5.0
	Start Time = 12:00AM-11:45PM	
*TECH: 01D AGS Sensor Temp (*Read Only)		≥Vers 5.0
*TECH: 02 Port Vers (*Read Only)		≥Vers 5.0
*TECH: 03 AccPort Versions (*Read Only)		≥Vers 5.0
TECH: 05 Fault History		
AGS Faults	Fault LED = off, view status using *METER: 04A AGS Status* menu; Fault LED = blinking; Fault status = alternates with inverter/charger status	≥ Vers 5.0

** Only MS-PAE, MS-PE, or MSH inverters* *** Requires the ME-BMK (Battery Monitor)*

8.1 ME-AGS-N Setup (with the ME-ARTR)

To access the AGS SETUP menus, press and hold the METER button (~3 seconds) to display the System Home screen. From the System Home screen, press the PORT button, or rotate the SELECT knob to the port# where the AGS is connected (AGS Home screen), and then press the SETUP button. The menus available from this screen allow the generator to be automatically started and stopped based on many different conditions. From Table 8-2, determine the specific autostart and autostop conditions with which you want to control the generator.

Info: The AGS SETUP menus can also be accessed by pressing the SETUP button from the System Home screen, and rotating and pressing the SELECT knob after selecting the *04 AGS Setup* menu.

Table 8-2, ME-ARTR Autostart/Autostop Matrix

Autostart Condition	Autostop Condition	See Setup Menu	Page
Starts on low battery voltage (DC voltage connected to Terminals #3 and #4)	Stops on higher battery voltage	04A Gen Run DC Volts	82
	Stops at Float Charge after a set time period (using *03D Absorb Done Time* setting)	04A Gen Run DC Volts (Set Stop Volts = Float)	82
	Stops at Float Charge after battery current requirement is low (using *03D Absorb Done Amps* setting)	04A Gen Run DC Volts (Set Stop Volts = Float)	82
	Stops at Float Charge using a battery SOC setting (using *03D Absorb Done SOC* setting)[2]	04A Gen Run DC Volts (Set Stop Volts = Float)	82
Starts at a set time daily	Stops at a different set time daily	04B Gen Run Time	84
Starts on high AC amps to an inverter load[1]	Stops on lower AC amps to an inverter load[1]	04C Gen Run AC Amps	84
Starts when the battery State of Charge (SOC)[2] is low	Stops when the battery State of Charge (SOC)[2] is higher	04D Gen Run SOC	85
Starts when temperature increases	Stops after a set time period	04E Gen Run Temp	86

Note[1]: *Only applicable to MS-PAE, MS-PE, MSH-M and MSH-RE Series inverters.*
Note[2]: *Autostart/autostop conditions using SOC require the ME-BMK (battery monitor) to be installed.*

SETUP: 04A Gen Run DC Volts Menu

This menu provides the option to start the generator when the battery voltage gets low, and to stop the generator either when the battery reaches a higher voltage level, or when the battery has been fully charged and goes into the Float Charge stage. Using voltage is the most common method of automatically starting and stopping the generator because it is considered the simplest and easiest to understand. The *04A Gen Run DC Volts* menu also has start and stop delay settings that minimize nuisance starts/stops to prevent short cycle run times of the generator.

- **Set Gen Run DC Volts (Start Volts)** – This setting starts the generator when the battery voltage (on Terminals #3 & #4 of the AGS) decreases to or below this setting continuously for the duration of the *Set VDC Delay Times (Start Delay)* setting.
  Default settings: *Start Volts = 11.5 VDC (12v), 23.0 VDC (24v), 46.0 VDC (48v)*
  Ranges: *OFF, 9.0-15.9 VDC (12v), 18.0-31.8 VDC (24v), 36.0-63.6 VDC (48v)*

Where should I set Start Volts? The VDC start voltage must be high enough to not over-discharge the battery, but low enough to keep from nuisance starting the generator. Typically, the start volts setting is set based on what is determined to be approximately 50% of the battery capacity. Since this is an inverter/battery system, and the battery is normally loaded, the VDC used to determine 50% battery capacity should be set lower than what is shown on typical battery voltage SOC charts (approximately 11 to 11.5 volts in a 12-volt system), which shows the battery at rest (unloaded). A typical start voltage setting would be between 11.0 - 11.5 VDC for a 12-volt system.

Info: The *Gen Run DC Volts* feature uses the voltage as shown on the METER button's *04B DC Volts to AGS* menu to determine when to autostart and autostop the generator.

Info: Using a 12-volt battery as an example, a typical SOC (State of Charge) battery chart shows that 12.2 VDC is considered 50% SOC. This voltage is a battery "at rest," meaning it has no load connected and has been at rest for a minimum of 30 min. While this voltage is accurate under these at rest conditions, this same voltage with a load applied means the battery is well above 50% SOC, and should be set much lower. However, the larger the battery bank the less the voltage is affected by a load applied to the battery bank.

Info: When using the *04A Gen Run DC Volts* feature, ensure the *Set Gen Run DC Volts* (*Start Volts*) setting is higher than the 0*2B Low Battery Cut Out* (*LBCO) Volts* setting (under *SETUP/02 Inverter Setup*). This prevents the inverter from shutting down before the generator comes on. The *04A Gen Run DC Volts* setting should be high enough to allow sufficient time until the generator is allowed to start (i.e., start delay time) and the inverter is allowed to connect (i.e., warm-up time and AC input delay time). Set the *Set Gen Run DC Volts* (*Start Volts*) setting at least 1-volt higher than the inverter's LBCO setting, and then adjust depending on how long it takes the battery voltage to fall under normal usage conditions.

- **Set VDC Delay Times (Start Delay)** – This setting determines how long the *Set Gen Run DC Volts (Start Volts)* parameter must be continuously maintained before autostarting the generator. This ensures the generator does not nuisance start. By setting a delay, momentary surges from heavy loads—that can cause the battery voltage to dip—do not start the generator unnecessarily.
  Default setting: *Start Delay = 120secs*
  Range: *0-127 Seconds,* then *1-127 Minutes*

Where should I set Start Delay? First, determine what loads will be running when the generator needs to start. The larger the load the shorter the delay time setting. When a large load is applied to the battery bank the battery voltage drops quickly, so the delay time should be short to ensure the batteries are not over-discharged. If you are not sure what loads might be running or where to set the start time delay, error on the side of setting a shorter time such as the default of 2 minutes (to protect batteries from over-discharge).

- **Set Gen Run DC Volts (Stop Volts)** – This setting will stop the generator when the battery voltage (on Terminals #3 & #4 of the AGS) increases to or above this setting continuously for the duration of the *Set VDC Delay Times (Stop Delay)* setting. To allow the battery bank to go through a full Bulk and Absorption charge, this setting should be set to *Float (Silent)*.
  Default settings: *Stop Volts = 14.4 VDC (12v), 28.8 VDC (24v), 57.6 VDC (48v)*
  Ranges: *OFF, 9.1-16.0 VDC (12v), 18.2-32.0 VDC (24v), 36.4-64.0 VDC (48v), Float*

Where should I set Stop Volts? Typically, when using a generator to charge batteries, most individuals only charge the batteries to 80-85% to compromise between minimizing fuel usage and maximizing battery life. This is done by having the generator start on low battery voltage, and then stop at a higher voltage (i.e., the *Stop Volts* setting). When deciding where to set the *Stop Volts* setting, it must be lower than the inverter's *Absorb Voltage* setting (determined by the *SETUP: 03C Battery Type* menu). Otherwise, the charger will enter Absorption Charge mode—which is required to maintain the batteries at a constant voltage level—and the battery voltage will not reach the *Stop Volts* setting, which will cause the generator to run until it is out of fuel or until it reaches the *SETUP: 04F Max Gen Run Time* setting.

Therefore, after reading this some will think that they should just set the *Stop Volts* setting slightly lower than the absorption level to ensure the charger always reaches the *Stop Volts* setting before it goes into the Absorption Charge mode. However, temperature changes can affect the absorb voltage setting[1] and may require you to readjust the *Stop Volts* setting seasonally. If you are in a normally cold climate (<32°F/0°C), the actual absorb charge voltage will increase. So, the *Stop Volts* setting should be set well above the absorb voltage setting (~.5V above for 12-volt systems). If you are normally in a hot climate (>95°F/35°C), the actual absorb charge voltage will decrease. In that case, the *Stop Volts* setting should be set well below the absorb voltage setting (~.5V below for 12-volt systems).

A simpler way to charge the batteries to 80-85% and to automatically allow a temperature-compensated charge to the batteries (no seasonal adjustment required) is accomplished using the settings below:

- Set *Stop Volts* to *Float*
- Set *Absorb Volts* (*SETUP: 03C Battery Type: Custom* setting) to the voltage level at which you want the generator to turn off (normally *~ 14.5 volts* for flooded batteries in a 12-volt system)
- Set *Absorb Done Time* (*SETUP: 03D Absorb Done Time*) to *0.1 hours* (lowest setting)

Using these settings, when the batteries reach a low voltage level the generator turns on (per the *Start Volts* setting) and charges the battery to the temperature-compensated *Absorb Voltage* setting. After reaching the absorption voltage level, the inverter/charger goes into Absorption Charge mode and is there for only 6 minutes (0.1 hours) before it goes to Float Charge mode. Once the inverter/charger enters Float Charge mode, the AGS will autostop the generator.

Info: Battery life will be reduced if the batteries are regularly only charged to 80-85%. It is highly recommended to charge the batteries to 100% as often as possible (~ once a week, or every other discharge cycle) in order to avoid sulfation of the battery plates. Using the *SETUP: 03D Absorb Done Time* menu, the absorption charge time can easily be changed to a longer duration to increase the batteries' state of charge.
Note: *If a ME-BMK (Battery Monitor) is installed in the system, refer to the SETUP/04J Gen 100% menu, which can be used to autostart the generator and to periodically charge the battery to 100%.*

- **Set VDC Delay Times (Stop Delay)** – This setting determines the amount of time the battery voltage must be above the *Stop Volts* setting continuously before the AGS will autostop the generator.
  Default setting: *Stop Delay = 120secs*
  Range: *0-127 Seconds,* then *1-127 Minutes*

Note[1]: *When the inverter's BTS is connected, the actual absorb charge voltage increases or decreases to ensure correct charging as the battery temperature changes.*

SETUP: 04B Gen Run Time Menu

This menu starts and stops the generator based on a specific time of day. This feature uses the ME-ARTR's internal clock to start and stop the generator at the selected times.

Info: Ensure the router's clock is correct. Refer to Section 3.3.4 for guidance on setting the time on the router clock. The ME-ARTR's clock is powered from the inverter through the remote cable. If the ME-ARTR or inverter loses power, the clock loses the correct time and must be reset.

- **Set Gen Run Time (Start Daily)** – This setting allows you to set a time at which the generator automatically turns on each day. Select *OFF* to disable the Gen Run Time feature.
  Default setting: *Start Daily = OFF*
  Range: *OFF, 12:00AM-11:45PM (15 minute increments)*
- **Set Gen Run Time (Stop Daily)** – This setting allows you to set a time at which the generator automatically turns off each day.
  Default setting: *Stop Daily = 12:00AM*
  Range: *12:00AM-11:45PM (15 minute increments)*

Why would you want to start/stop the generator daily? Starting/stopping at a particular time of day is useful if you want to run the generator for other uses while charging the batteries. You may require the generator to run a heavy load (like a well pump or machinery) every day at the same time; or, to run while at work each day to have charged batteries when you get home, and to avoid having to hear it run.

SETUP: 04C Gen Run AC Amps Menu

This menu starts the generator based on the amount of AC amps needed to handle the inverter load the inverter is running.

Info: The METER button's *02C System AC Amps (AC Load)* menu is used to determine how much load the inverter is currently running when in Inverter mode.

Info: The *04C Gen Run AC Amps* menu is only applicable to Magnum's MS-PAE, MS-PE, and MSH Series inverters.

- **Set Gen Run AC Amps (Start AC Amps)** – This setting determines when the generator would start depending on the AC amps level of the load the inverter is running. The load's amps level must be continuously maintained above the *Start AC Amps* setting for the duration of the *Start Delay* setting in order for the generator to autostart.
  Default setting: *Start AC Amps = OFF*
  Range: *OFF, 5-60 Amps*
- **Set Amps Delay Time (Start Delay)** – This setting determines the amount of time that the inverter load's current must continuously remain above the *Start AC Amps* setting for the AGS to initiate an autostart.
  Default setting: *Start Delay = 120secs*
  Range: *0-127 Seconds,* then *1-127 Minutes*
- **Set Gen Run AC Amps (Stop AC Amps)** – This setting determines when the generator would stop depending on the drop in the AC amps level of the load the inverter is running. The load's amps level must be continuously maintained below the *Stop AC Amps* setting for the duration of the *Stop Delay* setting in order for the generator to autostop.
  Default setting: *Stop AC Amps = 4 Amps*
  Range: *4-59 Amps*
- **Set Amps Delay Time (Stop Delay)** – This setting determines the amount of time the AC load must continuously remain below the *Stop AC Amps* setting before the generator autostops.
  Default setting: *Stop Delay = 120secs*
  Range: *0-127 Seconds,* then *1-127 Minutes*

Why would I use Gen Run AC Amps? This feature is designed to prevent the battery from being heavily discharged by monitoring the battery current used to power the inverter loads (shown in AC amps). When the AC current exceeds the *Start AC Amps* setting, a generator autostart is initiated. After the generator connects to the inverter, the current from the generator is now used to run the loads instead of the battery current. This feature is useful when there is occasionally a large load or combinations of loads that the inverter is able to run, but by doing so would quickly deplete the battery bank. Typically, these large loads might be motors, well pumps, A/C units, or freezers.

Info: The *04C Gen Run AC Amps* feature is not designed to turn on the generator to power loads above the capacity of the inverter. If attempting to run loads above the inverter capacity, the inverter may overload and shut down before the generator can autostart and power the heavy load thru the inverter.

Where should I set Gen Run AC Amps? Typically, the generator should autostart when the AC load amps is >70-75% of the inverter AC current output rating[1]. This keeps the inverter from running too large a load and also keeps the batteries from cycling unnecessarily. Set *Stop AC Amps* just below the start amps to ensure the large load has turned off. Set the start delay time so surge loads don't trigger a false start, and the stop delay time is long enough to ensure the load has turned off.

Example: In this scenario, most AC loads typically do not exceed 20A when in Inverter mode. When a freezer or well pump starts, the load exceeds 30A so the battery voltage starts to quickly drop. Instead of cycling the batteries to a low voltage, set *Start AC Amps* to *25A* with a *60-second* delay (using *Start Delay* setting). Set the *Stop AC Amps* menu to *20A* with a *60-second* delay (using *Stop Delay* setting). After 60 seconds of detecting a larger than 25A load on the inverter, the generator autostarts and powers the loads and recharges the batteries. Once the AC amps load drops below 20A for 60 seconds, the gen turns off.

SETUP: 04D Gen Run SOC Menu

This menu starts and stops the generator based on the SOC (State of Charge) reading from the attached battery monitor, as shown on the METER button's *05A BMK SOC* display. This is the best method for using AGS settings to start/stop your generator. Since the ME-BMK already uses voltage, time, and current to determine the true SOC of the batteries, there is little guesswork or calculating needed to determine what settings to use.

- **Set Gen Run SOC (Start SOC)** – This menu sets the SOC level for autostarting the generator.
  Default setting: *Start SOC = OFF*
  Range: *OFF, 20%-99%*
- **Set Gen Run SOC (Stop SOC)** – This menu sets the SOC level for autostopping the generator.
  Default setting: *Stop SOC = 90%*
  Range: *21%-100%*

Info: There is no start or stop delay time needed since the ME-BMK already displays an accurate state of charge of the batteries.

Info: The optional Battery Monitor Kit (ME-BMK or ME-BMK-NS) must be installed and enabled to use the *04D Gen Run SOC* autostart/autostop feature.

Info: When using the *04D Gen Run SOC* autostart/autostop feature, the generator autostarts and runs until the battery bank has reached the *Stop SOC* setting or the AGS's *SETUP: 04F Max Gen Run Time* setting is reached, whichever occurs first. Ensure the charger never leaves the Bulk/Absorption charge mode. This is done by ensuring the *SETUP: 03 Absorb Done* selection is "*SOC*" and the setting is greater than or equal to the *Stop SOC* setting; and either set the *Max Gen Run Time* setting to *OFF*, or set it long enough to ensure the generator is able to run until the battery is fully charged. If the charger is allowed to exit the Bulk/Absorption charge mode (i.e., go to Float/Silent), the battery SOC may never reach 100%.

Note[1] *– For a 4000 watt inverter, this would mean setting Start AC Amps at 25A.*

Info: The *METER: 05 BMK Meters/05A BMK SOC* meter must have a valid SOC number for the *04D Gen* to determine when to start and stop based on the battery SOC. Under the *METER/05 BMK Meters/05A BMK SOC* menu, *Think'n*, *No Comm*, or any BMK fault (i.e., *Factory Fault*, *Power-up Fault*, or *Unknown Fault ##*) are not valid SOC numbers.

Info: When the *04D Gen Run SOC* feature is enabled and a generator SOC start is triggered, the router issues a one-time "Start Bulk" command to the inverter/charger. This ensures—after the generator connects—that regardless of battery voltage, a Bulk/ Absorb charge cycle is started.

Where should I set Gen Run SOC? Most battery manufacturers recommend that for optimum battery life, deep-cycle batteries should not be discharged below 50% SOC. The ME-BMK determines the battery's SOC by using a DC shunt to measure the flow of current in and out of the battery. Many refer to a SOC meter as a "fuel gauge" for your batteries, since this meter gives you an accurate reading of how much capacity is remaining in the battery bank.

Set the *Start SOC* level to *50%*, or to *60%* if you do not want to discharge the batteries quite as much. When considering the *Stop SOC* setting, keep in mind that running the generator past 90% SOC delivers very little current to get that last 10% into the batteries. Thus, it is common to stop the generator at 90% to save fuel and run time on the generator. However, if the SOC stop setting is less than 100%, the batteries should be charged to 100% as often as possible (~ once per week, or every other discharge cycle) in order to avoid sulfation of the battery plates (see the *SETUP: 04J Gen 100% SOC Start* feature).

SETUP: 04E Gen Run Temp Menu

This menu allows you to automatically start the generator, either from an external temperature sensor, or by receiving an external input command from an A/C thermostat—typically, to power an A/C unit for cooling—based on an increase in temperature.

Note: *This temperature autostart feature requires that the AGS's remote temp sensor cable or an optional ME-PT1 or ME-PT2 pigtail adapter be connected to the AGS's REMOTE (purple) port.*

Info: The optional ME-PT1 or ME-PT2 pigtail adapters can be used to connect an A/C or relay control circuit. For more info, refer to the instruction sheet for each pigtail adapter (part number 64-0025 for ME-PT1 instructions, or 64-0026 for ME-PT2 instructions).

- **Set Gen Run Temp (Start Temp)** – This menu enables and sets the temperature that triggers a generator autostart. If the temp start feature is not needed, set to the *OFF* position.
  ExtInput – This setting is used when an optional pigtail adapter (ME-PT1, or ME-PT2) is used. When an AGS pigtail adapter is connected to the AGS's REMOTE port, an external command—either from a thermostat connection on an air conditioner control circuit or external relay control circuit—is recognized and causes the AGS to begin a generator autostart sequence. Once the external command is no longer recognized, an autostop sequence is given and the generator stops after a minimum two-minute delay.
  65F–95F (18C–35C) – These settings determine the rising temperature value that triggers a generator temperature autostart.
  Default setting: *Start Temp = OFF*
  Range: *OFF, ExtInput, 65F-95F (18C-35C*)*
- **Set Gen Run Temp (Run Time)** – This menu sets the amount of time the generator runs after a temperature autostart when using the remote temperature sensor.
  Default setting: *Run Time = 2.0 Hrs*
  Range: *0.5-25.5 Hrs (0.5 hr increments)*

  Info: The *Run Time* in this menu uses the METER button's *04C Gen Run Time* display to determine the generator's run time.

  ***Setting shown in Celsius if SETUP/01 System Setup/01D Temp Display has 'Celsius' selected.*

How does the Gen Run Temp feature work? When the temperature around the remote temperature sensor (based on the *METER: 04D AGS Temp* display) increases to the *Gen Run Start Temp* setting, the generator immediately starts and runs based on the *Gen Temp Run Time* setting. When this run time period is finished, the temperature sensor reading is checked. If the temperature sensor (or thermostat control if using optional pigtail adapter) reading is below the *Start Temp* setting, the generator autostops. If the temperature sensor (or thermostat control) reading is above the *Start Temp* setting, the generator continues to run for a another run time period. At the end of this run time period, the temperature sensor reading (or thermostat control) is checked again. If the temperature sensor reading is still above the *Start Temp* setting, the generator continues to run as long as the *CTRL: 03 Gen Control* menu is set to *AUTO* and the *SETUP: 04F Max Gen Run Time* setting has not been reached.

Why would I use Gen Run Temp? Typically, in a mobile application such as in an RV or on a boat where the air conditioning (A/C) unit is too much power for the inverter to run from the batteries, this feature is used to start a generator to run the A/C unit. Many RV and marine customers travel with pets and they do not want to leave the pets inside on a hot day. With this feature, you could set the A/C unit to turn on and leave. Whenever the inside temperature rises to the start setting, the AGS commands the generator to autostart; which provides power to the A/C unit so that it can now run and cool the pet area. This would keep the area cool and comfortable—plus, while the generator is on, the inverter batteries are being charged.

Should I use the Remote Temperature Sensor or the External Input? If your A/C unit provides a thermostat connection or you want to set up an external relay control circuit, then the external input (*ExtInput*) selection works for you. When using the external input setting, you must connect an optional AGS pigtail adapter (ME-PT1 or ME-PT2) to the AGS's REMOTE port. When the pigtail adapter recognizes an external command, the AGS begins a generator autostart sequence.

Info: The ME-PT1 requires a +12-volt to common ground input, and the ME-PT2 requires a two-terminal dry contact input.

Without any connection to an external control circuit, the remote temperature sensor cable must be used. This cable is provided with the AGS and is 60' in length with the sensor wired to the end and covered with heat shrink. The sensor must be placed in the location that is required to be monitored for temperature and the *Gen Run Temp Start* setting must be set.

Where should I set Gen Run Temp Start? If you are using this feature to power an A/C unit, the *Start Temp* setting should be slightly above the temperature setting of the thermostat controlling the air conditioner unit—to ensure the A/C unit runs once the generator starts. Once the *Start Temp* setting is reached, the generator starts providing power to the A/C unit.

If the *Start Temp* setting is below that of the A/C unit's thermostat setting, the generator could be commanded to autostart; but because the thermostat has not reached its start temperature, the A/C unit wouldn't have turned on yet. In other words, your generator would be running, but the A/C unit would not be running—resulting in wasted fuel and the area not being cooled down.

Info: If using the temperature autostart feature to start a generator that is powering two air conditioners, it is suggested that the second air conditioner's thermostat be set 2° to 5° higher than the first air conditioner. This staggered setting allows the first air conditioner to start and run in an effort to keep the coach cool. If the temperature continues to rise inside the coach, the second air conditioner would then turn on.

How long should I set the Gen Run Temp Time? When using the remote temperature sensor cable and setting the *Gen Run Temp Start* temperature, the *Run Time* setting must be set. When the temperature rises to the *Start Temp* setting, the generator autostarts and runs until either the *Run Time* setting or the *SETUP: 04F Max Gen Run Time when Autostarted* setting is reached, whichever occurs first. At the end of the *Run Time* setting, the temperature around the sensor is checked. If the temperature is still above the *Temp Start* setting, the generator continues to run for another *Run Time* setting. This means you could set the time to the lowest time setting (*0.5 Hrs*), knowing the generator attempts to run until the temperature setting is met.

SETUP: 04F Max Gen Run Time when Autostarted Menu

This menu is used to set the maximum time the generator runs if autostarted.

- **Max Gen Run Time when Autostarted** – Sets the maximum amount of time you want the generator to run once it has been autostarted.
  Default setting: *Max Gen Run Time when Autostarted = 12.0 Hrs*
  Range: *OFF, 0.1-25.5 Hrs (0.1 hr increments)*

Why use Max Gen Run Time? This setting ensures the generator does not run longer than desired after an autostart. Designating a max run time ensures the generator stops if the autostop setting cannot be satisfied. *Example:* If the fuel capacity of your generator is 5 hours, set the *Max Gen Run Time* setting to 4.5 hours to ensure the generator does not run out of fuel.

Info: When the generator autostarts, it stops when the autostop parameter for that particular setting has been satisfied. For example, if the generator starts due to the *04A Gen Run DC Volts* menu's autostart setting, it stops when the *Stop Volts* autostop setting is satisfied; unless the *Max Gen Run Time* setting has been reached. The *Max Gen Run Time* setting overrides any autostop setting and causes the fault LED to come on and displays the *Fault MaxRn* status. If this happens, you may have to increase the *Max Gen Run Time* setting or adjust the autostop setting to finish sooner. If multiple autostart settings are set and a *Fault MaxRn* status occurs, refer to the METER button's *04A AGS Status* menu to identify which condition autostarted the generator. This way you know which auto condition is running longer than the *Max Gen Run Time* setting.

Info: The *Max Gen Run Time* menu uses the METER button's *04C Gen Run Time* display to determine the generator's run time.

Info: If the generator is stopped due to the *Max Gen Run Time* parameter being met, the status becomes *Fault MaxRn,* and does not autostart again until you clear the fault by selecting *OFF* under the *CTRL:03 Gen Control* menu.

SETUP: 04G Gen Quiet Time Menu

This menu is used to enable the *Quiet Time* feature and to set the period of time each day in which the generator is not allowed to automatically run. The generator is prevented from autostarting during the Quiet Time period. Also, if any autostart parameter in the *04 AGS Setup* menus has been met and the generator is running when the Quiet Time start setting is reached, the generator turns off. The generator does not try to autostart until the Quiet Time stop setting has been reached and an autostart condition is once again satisfied.

Info: The ME-ARTR contains a real time clock that must be set for proper operation of the *SETUP: 04G Gen Quiet Time* menu feature.

- **Set Gen Quiet Time (Begin Quiet)** – Set the time you want Quiet Time to begin.
  Default setting: *Begin Quiet = OFF*
  Range: *OFF, 12:00AM-11:45PM (15 minute increments)*
- **Set Gen Quiet Time (End Quiet)** – Set the time you want Quiet Time to end.
  Default setting: *End Quiet = 10:00AM*
  Range: *12:00AM-11:45PM (15 minute increments)*
- **Set Time to Topoff Battery before Quiet Time** – This menu sets the time period the generator autostarts and runs before Quiet Time begins. The generator only starts on Quiet Time topoff if the battery voltage is within 0.3 volts[1] or less of reaching the *04A Gen Run DC Volts* start parameter, or the battery's SOC is within 4% or less of reaching the 04D Gen Run SOC start parameter[2].
  Default setting: *Set Time to Topoff Battery before Quiet Time = OFF*
  Range: *OFF, 30-120 Minutes (30 minute increments)*

Note[1]: *This voltage is scaled depending on your battery system; ≤0.3 for 12-volt systems, ≤0.6 for 24-volt systems, and ≤1.2 for 48-volt systems.*
Note[2]: *Requires an optional Battery Monitor Kit (ME-BMK or ME-BMK-NS) installed and enabled.*

Why would I use Quiet Time? Quiet Time is used when there are park rules or local regulations that prevent generators from running (e.g., noise requirements during sleep hours). If there are no local rules or regulations, you may not want to use Quiet Time—which would allow the generator to run at any time in a 24-hour period.

Where should I set Quiet Time? Set the Quiet Time begin and end settings to coincide with local noise requirements, or for a specific time period that you do not want the generator to automatically run each day.

What is Quiet Time Topoff? The Quiet Time Topoff feature charges the battery prior to the start of Quiet Time in an attempt to prevent the inverter from shutting down from a low battery condition during the entire Quiet Time period. The Quiet Time Topoff feature is enabled whenever you select a time under the *Set Time to Topoff Battery before Quiet Time* menu.

The *Set Time to Topoff Battery before Quiet Time* (or "topoff time period") determines how long the battery voltage is monitored before the start of Quiet Time. During the topoff time period, if battery voltage is 0.3 volts[1] or less of reaching the *04A Gen Run DC Volts* start parameter, the generator automatically starts and charges the batteries before Quiet Time turns off the generator.

If an optional Battery Monitor Kit (ME-BMK or ME-BMK-NS) is installed and enabled, the Quiet Time Topoff feature also autostarts the generator if the battery's SOC is within 4% or less of reaching the *04D Gen Run SOC* start parameter during the topoff time period.

Where should I set Quiet Time Topoff? Normally, setting Quiet Time topoff to 30 or 60 minutes is a good idea. In cases where the DC or inverter loads are unusually high or the SOC autostart setting is low—which may cause the batteries to be heavily discharged during the Quiet Time period—you may want to increase Quiet Time topoff to 90 or 120 minutes; this ensures the batteries receive the maximum charge time before Quiet Time shuts the generator off.

Info: When the generator starts on QT topoff, it continues running until it reaches the Quiet Time start parameter—even if the VDC or SOC autostop parameter is reached.

Scenario example (Topoff based on battery voltage): The *04A Gen Run DC Volts* menu is set to start at 11.5 VDC, Quiet Time is set to start at 10PM, and the Quiet Time topoff setting is 60 min. At 9PM, the battery voltage reaches 11.8 VDC; because the *Quiet Time Topoff* feature is enabled (60 min.) and the battery voltage is within 0.3 volts of the *04A Gen Run DC Volts* start setting, the generator autostarts to allow the batteries to charge for 60 minutes before Quiet Time turns the generator off.

Scenario example (Topoff based on battery SOC): The *04D Gen Run SOC* menu is set to start at 60%, Quiet Time is set to start at 10PM, and the Quiet Time topoff setting is 120 min. At 8PM, the battery SOC reaches 64%; because the *Quiet Time Topoff* feature is enabled (120 min.) and the battery's SOC is within 4% of reaching the *04D Gen Run SOC* start setting, the generator autostarts to allow the batteries to charge for at least 120 minutes before Quiet Time turns the generator off.

Note[1]: *This voltage is scaled depending on your battery system; ≤0.3 for 12-volt systems, ≤0.6 for 24-volt systems, and ≤1.2 for 48-volt systems.*

SETUP: 04H Gen Exercise Menu

This menu allows the generator to run (or "exercise") after it has not been operated for a period of time. The generator is automatically started at a pre-selected time whenever it exceeds a set number of days without running.

Once the start command is initiated, the generator starts and runs to help it remain operational and to allow the generator's starting battery to be charged.

Info: The ME-ARTR contains a real time clock that must be set for proper operation of the *SETUP: 04H Gen Exercise* menu feature.

- **Set Gen Exercise (Start Gen Days)** – This menu sets the maximum number of days the generator is allowed to sit without running. If the generator has not run in this number of days, the exercise parameters will start the generator. The *Start Gen Days* setting must be between 1-255 days in order to enable the *Gen Exercise* feature.
  Default setting: *Start Gen Days = OFF*
  Range: *OFF, 1-255 Days*
- **Set Gen Exercise (Start Time)** – This menu sets the time of day the generator starts once it reaches the *Start Gen Days* setting.
  Range: *12:00AM-11:45PM (15 minute increments)*
- **Set Gen Exercise (Run Time)** – This menu sets the maximum number of hours the generator will run once started by the *Start Gen Days* and *Start Time* settings.
  Range: *0.1-25.5 Hrs*

Why should I use Gen Exercise? Exercising your generator is one of the most overlooked aspects of routine maintenance, yet its the simplest to perform. Regularly exercising your generator keeps engine seals and components lubricated, prevents oxidation of electrical contacts, uses up fuel before it deteriorates, heats up the generator windings to eliminate moisture buildup, helps ensure the generator's starting battery is maintained at an optimal state of charge, and in general, helps provide reliable engine starting. If long periods of time elapse without using your generator (remains connected to external AC power), or if you only use your generator a few days out of the year, enabling the *Gen Exercise* feature is recommended.

How often and how long should I exercise my generator? To maximize reliability and minimize repairs, exercise your generator at least once per month. This applies to both gas and diesel generators. When generators sit unused for as little as 30 days moisture can build up. Also, the fuel in gasoline-powered generators can begin to break down into gums and varnishes that clog the fuel system. Fuel varnishing results in hard starting and surging—a surging generator may not settle at a stable operating speed. Always check with your generator's manufacturer to determine how to properly exercise your generator. Generally, it is recommended that you run the generator every month for two hours under at least half the rated load. For example, with a 5,000 watt generator, turn on a load(s) that is about 2,500 watts, and let it run continuously for two hours. It is always best to run the generator for longer periods of time, rather than for multiple short periods.

How does this Gen Exercise feature work? The Gen Exercise feature allows the generator to autostart at a pre-selected time (*Start Time* setting) whenever it has not run for a set number of days (*Start Gen Days* setting). Once the Gen Exercise feature is enabled—by setting the *Start Gen Days* setting—the generator starts and begins exercising only after two conditions are met. First, the generator must not have run for a set number of days (i.e., the days shown under the Days Since Run timer must be equal to or greater than the *Start Gen Days* setting). Second, the generator's exercise time of day (*Start Time* setting) must occur.

Info: When the generator starts and runs per the gen exercise criteria, the generator power passes thru the inverter to the inverter loads—if the inverter is enabled to accept AC power on its input—and also charges the inverter batteries (if the charger is enabled).

Info: The *Gen Exercise* feature identifies the number of days since the generator has last run by using the Since Run Days timer—see *METER: 04E Since Run Days* display.

Example of a Gen Exercise Scenario:

Under *SETUP: 04H Gen Exercise* menu, set to: *Start Gen Days = 3*, then set *Start Time = 8:30AM*, and then set *Run Time = 1.0 Hours.*

Under *CTRL: 03 Gen Control,* set to *AUTO*.

First required condition: The Days Since Run timer must have accumulated to at least 3 days (*Start Gen Days = 3*). On Day 1, the generator was manually started and stopped at 2:00PM. The stop time (2:00 PM) is the starting point for the Days Since Run timer to begin counting days—the Days Since Run timer displays *0 Days*. On Day 2 at 2:00 PM, 24 hours have accumulated since the generator has last run—the Days Since Run timer displays *1 Day*. On Day 3 at 2:00 PM, 48 hours have accumulated since the generator last ran—the Days Since Run timer displays *2 Days*. On Day 4 (3rd day since the generator was manually started) at 2:00PM, 72 hours (or 3 days) have now accumulated since the generator has last run—the Days Since Run timer now displays *3 Days*. The first required condition—which is how many days must pass before the generator hasn't run—has been met.

Second required condition: The router's clock must now go to 8:30 AM (*Set Gen Exercise: Start Time = 8:30A*) before the generator can autostart. On Day 5 at 8:30AM (Days Since Run timer displays *3 Days*), the second required condition is met and the generator automatically starts and runs for 1 hour (*Set Gen Exercise Run Time = 1.0 Hrs*).

Info: If the generator does not start (e.g., AGS fault, gen runs out of fuel, etc.,) despite the gen exercise start criteria being met, an additional day must increment before another attempt is made.

SETUP: 04I Gen No-Load Time Menu

This menu's warm-up setting allows the generator to run (i.e., warm up) before it connects to the inverter/charger, or powers the battery charger and any pass-thru loads. Most generators need to warm up before a load is supplied—similar to warming up your car before driving it.

This menu's cooldown setting allows the generator to continue to run unloaded after it disconnects from the inverter and prior to autostopping (i.e., cool down). Allowing the generator to cool down after the load is disconnected helps to prolong generator engine life (especially diesel engines with turbos).

- **Set Gen No-Load Time (Warm-up)** – This setting is the amount of time the generator is allowed to warm up before connecting to the inverter/charger.
  Default settings: *Warm-up = 60 secs*
  Ranges: *0-127 Seconds,* then *1-127 Minutes*

Where should I set Gen Warm-up Time? Check with your generator manufacturer. Typically, smaller generators (~2-3 kW) need at least 60 seconds to warm up before applying a load; larger generators require a longer warm-up time.

- **Set Gen No-Load Time (Cooldown)** – This setting is the amount of time the generator is allowed to cool down after it disconnects from the inverter/charger.
  Default settings: *Cooldown = 60 secs*
  Ranges: *0-127 Seconds,* then *1-127 Minutes*

Where should I set Gen Cooldown Time? Check with your generator manufacturer. Typically, smaller generators (~2-3 kW) need at least 60 seconds to cool down after being disconnected from a load; larger generators require a longer cooldown time.

Info: The warm-up and cooldown features prevent the generator from connecting to the inverter's AC input. Since the inverter only has a single-source input, it cannot distinguish between grid or generator input. So, during the warm-up or cooldown time, the inverter prevents any AC input from connecting. Also, when either warm-up or cooldown is activated, any AC source (i.e., grid or generator) connected to the inverter's AC input disconnects until the time period (warm-up or cooldown) is over.

SETUP: 04J Gen 100% SOC Menu

This setting allows the AGS to autostart the generator at a pre-selected time of day—whenever a set number of days have passed since the battery bank has been charged to 100% SOC.

Info: The optional Battery Monitor Kit (ME-BMK or ME-BMK-NS) must be installed and enabled to use the Gen 100% SOC Start feature.

- **Set Gen 100% SOC (Start Gen Days)** – This menu sets the maximum number of days the generator waits before autostarting and fully charging the battery bank to 100% SOC. If the battery bank has not been fully charged to 100% SOC in this number of days, the AGS starts the generator at a pre-set time of day.
  Default setting: *Start Gen Days = OFF*
  Range: *OFF, 1-255 Days*

Info: The *Start Gen Days* setting must be between 1-255 days in order to enable the Gen 100% SOC Start feature.

- **Set Gen 100% SOC (Start Time)** – This menu sets the time of day the generator autostarts once the *Start Gen Days* setting is met.
  Range: *12:00AM-11:45PM (15 minute increments)*

Why should I use the Gen 100% SOC Start feature? In installations that primarily use a generator to charge the battery bank, the generator run time is usually limited in order to save on fuel costs, which does not allow the battery bank to be fully charged. If this situation persists (where the batteries never reach full charge), some reduction in the battery life will occur. This feature helps to maximize the life of the batteries.

How many days should I wait to fully charge my battery bank? Most battery manufacturers recommend that the batteries be fully charged each time to ensure maximize battery life. With this in mind, select the amount of days that gives you a good balance between reducing fuel consumption and maximizing battery life. If the batteries are discharged heavily each day, then a full charge would need to occur more often—maybe every 3-4 days. If the batteries are discharged lightly each day, then a full charge may only be needed once every week or two. Monitor your battery system to adjust the days to find the best compromise.

How does the Gen 100% SOC Start feature work? This feature allows the generator to autostart at a pre-selected time of day if the battery hasn't been charged to 100% SOC (per the ME-BMK battery monitor) for a set number of days. Once this feature is enabled (by setting *Start Gen Days* value), the generator will start only after two conditions are met. First, the battery hasn't been charged to 100% SOC for a set number of days. This is determined by monitoring the BMK's *METER: 05I Days Since 100% SOC* value, which must be equal to or greater than the *Start Gen Days* setting. Second, the 100% SOC start time of day (i.e., *Start Time* setting) must occur.

Info: When using the *Gen 100% SOC Start* autostart feature, the generator autostarts and runs until the battery bank has reached 100% SOC or the AGS's *SETUP: 04F Max Gen Run Time* setting is reached, whichever occurs first. Ensure the charger never leaves the Bulk/Absorption charge mode. This is done by ensuring the *SETUP: 03D Absorb Done* selection is "*SOC*" and the setting is 100% (*Absorb Done SOC = 100%*), and either setting the *Max Gen Run Time* setting to *OFF* or setting it long enough to ensure the generator is able to run until the battery is fully charged. If the charger is allowed to exit the Bulk/Absorption charge mode (i.e., go to Float/Silent), the battery SOC may never reach 100%.

Info: The *Gen 100% SOC Start* setting uses information from the BMK's *METER: 05I Days Since 100% SOC* menu to determine how many days have passed since the battery bank has not been charged to 100% SOC. A valid SOC number must be displayed under the *METER: 05A BMK SOC* menu for the BMK's *METER: 05I Days Since 100% SOC* menu to accumulate and display days. *Think'n*, *No Comm*, or any BMK fault (i.e., *Factory Fault*, *Power-up Fault*, or *Unknown Fault ##*) are not valid SOC numbers.

Info: When the SETUP button's *04J Gen 100% SOC Start* feature is enabled and a generator SOC start is triggered, the router issues a one-time "Start Bulk" command to the inverter/charger. This ensures—after the generator connects—that regardless of battery voltage, a Bulk/Absorb charge cycle is started.

Info: When using the SETUP button's *04J Gen 100% SOC Start* feature, set the *CTRL: 01 AC In Control* menu to *Auto Connect*. This ensures the generator—once autostarted—will connect and charge the battery.

Info: The ME-ARTR contains a real time clock that must be set for proper operation of the *SETUP: 04J Gen 100% SOC Start* feature.

Info: Once the BMK's *METER: 05A SOC* menu displays *100%*, the AGS stops the generator and the BMK's *METER: 05I Days Since 100% SOC* display resets to *0 Days*.

Info: If the generator does not start (e.g., AGS fault, gen runs out of fuel, etc.,) despite the gen SOC start criteria being met, an additional day must increment before another attempt is made.

8.1.1 ME-AGS-N Functional Tests using the ME-ARTR

Once you have used your router to establish all the autostart/autostop settings you need, perform the following tests to verify that the AGS system is functioning correctly and the communication from the router/inverter to the ME-AGS-N is correct.

8.1.1.1 Determining AGS Status

View the second line of the router's AGS Home screen to determine the AGS's status.

To access the AGS Home screen:

1. Press and hold the METER button for 3 seconds. The System Home screen displays.
2. Rotate the SELECT knob (or press the PORT button) to the port# to which the AGS is connected. This should be the AGS Home screen ("*AGS Home"* appears in the bottom right).

Info: The AGS status can also be viewed by pressing the METER button, rotating the SELECT knob to the *04 AGS Meters* menu, and then pressing the SELECT knob and rotating it to the *04A AGS Status* menu.

The AGS's status should be Gen Off (*Off)* or Gen Ready (*Redy)*. If it displays either status, then the router/inverter is correctly communicating with the AGS. If the AGS status displayed is not *Off* or *Redy*, then refer to Section 8.3.2 "Resolving AGS Faults using your Router" for assistance.

8.1.1.2 Starting the Generator from the Router

Before proceeding, ensure the AGS status is *Off* or *Redy* (see Section 8.2.1).

1. Press the CTRL button, and then turn the SELECT knob to the *03 Gen Control* menu.
2. Press the SELECT knob, and then rotate it to the *ON* setting.
3. Press the SELECT knob again to turn on the generator.

Info: Once the generator starts, it should run until you change the *03 Gen Control* setting to *OFF*.

If your AGS/gen system started, and the STATUS LED on the AGS module turns solid green (after two minutes), then the wiring from the AGS to the generator is correct. You can now enable the AGS by setting the *03 Gen Control* setting to "*AUTO*" in your router (see Section 8.2.1).

If the router displays a generator fault, or the AGS module's STATUS LED continues to blink or shows a fault condition (solid red LED indication), refer to your AGS owner's manual for assistance.

Info: A solid green STATUS LED means the generator has successfully started and is providing the generator run sense signal to the AGS module.

Info: If the generator attempted to start but did not run, continue to wait—the AGS attempts to start the generator three more times. If the generator fails to start after four attempts, the STATUS LED turns red—indicating a fault.

8.2 ME-AGS-N Operation/Monitoring (with the ME-ARTR)

This section covers the AGS menus under the router's CTRL and METER buttons that determine how to control and operate the generator. The section also includes menus that are used to help monitor the AGS and the generator's starting/running conditions.

8.2.1 Controlling the AGS using the ME-ARTR

The AGS uses the *CTRL: 01 AC In Control* menu to ensure the incoming AC from the generator will be connected, and the *CTRL: 03 Gen Control* menu is used to activate the generator either manually or automatically. Press the CTRL button on the ME-ARTR router to access the *01 AC In Control* and the *03 Gen Control* menus.

CTRL: 01 AC In Control

The *01 AC In Control* menu determines the condition in which the inverter/charger connects to an incoming AC power source. When using a ME-AGS-N, the *Auto Connect* setting must be selected. If another *AC In Control* setting is enabled, the inverter/charger may be prevented from connecting—when the generator is autostarted—because the criteria to allow the AC input to connect (AC In based on time, VDC, or SOC) may not have been met.

Note: *This is true unless the inverter has two independent AC source inputs—one for grid and the other for generator—as provided in the MSH4024RE. If you are using a MSH4024RE, then you can select any AC In selection that is appropriate for your application, because the AC In Control features only work with the GRID IN (AC1) input.*

CTRL: 03 Gen Control

This menu is used to manually turn the connected generator on and off, or to select the *AUTO* feature which enables the active generator autostart and autostop settings to control the connected generator. Available selections are:

- **OFF:** This selection turns the generator off if it is running from either a manual "*ON*" command or an "*AUTO*" start command. When *OFF* is selected, the AGS is prevented from starting the generator automatically. This is the default setting.

  Info: When *OFF* is selected, the AGS turns off immediately without any cooldown time (if set). However, if the generator is manually started from a generator control panel or a generator remote panel, selecting *OFF* may not shut down the generator.

  Info: If DC power is lost to the router or to the inverter system, this menu resets to the default *OFF* position for safety.

- **ON:** This selection manually starts the generator by sending a "start" command from the AGS. Once the generator is started, it must be manually stopped, either from an external stop switch or by selecting *OFF* from the *03 Gen Control* menu, which sends a "stop" command from the AGS module.

  Info: When *ON* is selected, the Magnum inverter will not attempt to accept the generator AC voltage until the warm-up period (if set) is satisfied.

  Info: The generator can be manually started and then automatically stopped. First, select *ON* from the *03 Gen Control* menu to manually start the generator. Once the generator is running, change the selection to *AUTO*—this automatically stops the generator. When the generator has been manually started and the *AUTO* setting is selected, the AGS status displays as "*Start VDC*" and uses the autostop setting under the SETUP button's *04A Gen Run DC Volts* menu (even if not active) or the *04F Max Gen Run Time* menu, whichever occurs first. This manual-on, auto-off feature is useful if you need to ensure the generator starts before you leave.

- **AUTO:** This selection enables the AGS to automatically start/stop the generator once an active autostart condition is satisfied. Refer to the *SETUP: 04 AGS Setup* menus in Section 8.1 to set the start and stop parameters for the generator.

8.2.2 Enabling the ME-AGS-N

Before the AGS can begin operating/monitoring for an autostart condition (using active AGS autostart/autostop settings in your ME-ARTR), it must be enabled. To enable the AGS:

1. Press the router's CTRL button, and then rotate the SELECT knob to the *03 Gen Control* menu.
2. Press the SELECT knob. The *Set Gen Control* screen displays with the current gen control setting and an arrow to the right.
3. Turn the SELECT knob to the *AUTO* setting, and then press the SELECT knob again to select this setting. The selection arrow appears to the right of the screen.

After enabling the AGS, go to the *METER: 04A AGS Status* menu. If the AGS's status is Gen Ready (*Redy*), then the AGS is ready to automatically start/stop the generator once an autostart condition is satisfied. If the AGS's status is not Gen Ready, then refer to Section 8.3.2 "Resolving AGS Faults using your Router" before continuing.

Note: *If power is lost to your router, the AGS control setting returns to the default OFF setting. Once power is restored, you must enable the AGS again.*

Info: Several autostart/autostop settings can be active at once. However, once an autostart condition becomes active, all other autostart conditions are ignored until the specific condition that caused the generator to start (e.g., *Start Gen AC Amps*) is satisfied by its autostop condition (e.g., *Stop Gen AC Amps*). Once the generator has completed this autostart/autostop cycle, the AGS immediately begins to monitor for any active autostart/autostop settings again.

8.2.3 Monitoring the AGS using the ME-ARTR

The ME-ARTR router has additional METER button menus that are helpful for the proper operation and monitoring of your AGS system.

8.2.3.1 ME-ARTR Router's AGS METER Menus

Press router's METER button and rotate the SELECT knob to view the following read-only menus.

Info: If multiple AGS devices are connected, the System Home screen displays the information from the AGS that is connected to the LOWEST numbered port. For example, if an AGS is connected to the network port on an inverter that is connected to Port 2 (P2Acc), and another AGS is connected to Port 3 on the router (P3), the System Home screen will show the information from the AGS connected to P2Acc.

METER: 04A AGS Status Menu

This read-only menu displays the AGS's current status. These status messages (listed below) identify what state the AGS is currently in—only one displays at a time (refer also to Figure 8-2).

Note: *For specific information on each operational and start status message, refer to Tables 8-3 & 7-4. For any fault mode displayed in the status menu, refer to Table 8-5.*

Info: This menu helps determine if the AGS is working correctly, or for troubleshooting an AGS installation. See Section 8.3.2 for more information on any AGS faults.

Operational/Start Status:

- AC In
- Gen Cooldown
- Gen Off
- Gen Ready
- Gen Warmup
- Manual Run
- No AGS Comm
- Quiet Time
- Start Amp
- Start Exercise
- Start SOC
- Start Temp
- Start Test
- Start Time Daily
- Start Topoff
- Start VDC
- Start 100% SOC

Fault Status:

- Fault Amp
- Fault Exercise
- Fault Gen Run
- Fault MaxRn
- Fault SOC
- Fault Test
- Fault Temp
- Fault Time Daily
- Fault Topoff
- Fault VDC
- Fault 100% SOC
- Unknown ?##?

METER: 04B DC Volts to AGS

This read-only menu displays the DC voltage measured at Terminal #3 and Terminal #4 of the AGS module. This menu is useful in setting up the voltage start for the AGS, and for troubleshooting its operation.

Info: The DC voltage reading in the *04B DC Volts to AGS* (DC voltage to AGS) menu may vary from the DC voltage readings in the METER button's *01A DC Volts to Inv* (DC voltage to inverter) and *05B DC Volts – BMK* (DC voltage to BMK) menus. For verification and testing purposes, read the appropriate related meter for each device.

METER: 04C Gen Run Time Menu

This read-only menu displays the length of time the generator has been running since it was autostarted by the AGS. This is useful when trying to determine how long the generator has been running since it was autostarted—in case you were not present when it started. This menu is enabled when the *CTRL: 03 Gen Control* menu is set to *AUTO*, but does not display run time when the generator has been manually started. This meter is not designed to replace an hour meter that shows the total hours the generator has run—refer to the *METER: 04G Gen Hour Meter* menu.

Info: The *Gen Run Time* menu's timer is started when the gen run sense voltage/signal is correct and qualified at the AGS module. It is not considered qualified until after a full start attempt and the *04I Gen Warm-up Time* setting is satisfied. Cooldown and warm-up times are not included in the gen run time display. *Total generator run time = Gen Run Time + Gen Warm-up Time + Gen Cooldown Time*.

Info: The times in this display are shown in tenths of an hour (e.g., 0.0 hrs., 0.1 hrs., etc.,)—thus, 0.1 hrs. = 6 minutes.

Info: Depending on the ME-AGS-N version, the *Gen Run Time* display resets to 0.0 differently. The ME-AGS-N (Ver 5.2): Resets to 0.0 when the generator autostart has finished. The ME-AGS-N (≥Ver 5.3): Resets to 0.0 when another generator autostart is triggered.

Info: This display is used by the *SETUP: 04F Max Gen Run Time* menu to determine the generator's maximum run time when started automatically.

METER: 04D AGS Sensor Temp Menu

When the AGS remote temp sensor (included with AGS, but use is optional) is connected to the AGS's REMOTE (purple) port, this read-only menu displays the temperature of the temp sensor. If the temperature around the sensor is a very high (>104F), the display will show "*TS Hot*", and if very cold (<33F), the display will show "*TS Cold*". If the temperature sensor is not installed, the display will show "*TS Open*".

Info: The temperature in the *METER: 04D AGS Temp* menu can be displayed in either Fahrenheit (default) or Celsius depending on the *SETUP: 01D Temp Display* setting.

If an optional ME-PT1 (or ME-PT2) pigtail adapter is connected to the AGS's REMOTE (purple) port, and the *Set Gen Run Temp* (*Start Temp*) setting is set to *ExtInput* (under the *SETUP: 04E Gen Run Temp* menu), this display will show "*Ext ON*" when the ME-PT1 has +12 present on its input (or the ME-PT2 is closed); and, will show "*Ext OFF*" when the ME-PT1 does not have +12 on its input (or the ME-PT2 is open).

METER: 04E Since Run Days Menu

This read-only menu displays the number of days since the generator has last run. The Since Run Days timer begins once the *CTRL: 03 Gen Control* menu is set to *AUTO*, and then counts by one day for every 24-hour period that the generator does not start. The Since Run Days timer resets any time the gen run sense signal is present on Terminal 2 of the AGS, which could be either by autostarting the generator (including from a previous exercise run), or manually starting the generator (using the ME-ARTR).

Info: When the DIP switch inside the AGS is set to "2-Wire Standby Mode", which does not require the gen run sense signal to be present on Terminal 2 of the AGS, the Since Run Days timer will not be reset to zero.

Info: If a MSH4024RE (dual AC input inverter) is used, the Since Run Days timer also resets any time voltage is present on the AC2 (Gen) input.

METER: 04F Since 100% Days Menu

This read-only menu displays the number of days since the battery was at 100% SOC, and is calculated in the ME-AGS-N. It is used by the SETUP button's *04J Gen 100% SOC Start* feature to determine when to command the ME-AGS-N to autostart the generator.

Info: This display resets once the battery SOC reaches 100%, power to the AGS is lost, or the data communications from the BMK is lost.

Info: The *METER: 04F Since 100% Days* menu uses information from the *METER: 05A BMK SOC* menu to determine the last time the battery SOC was 100%.

Info: For the *METER: 04F Since 100% Days* to increment, the *METER: 05A BMK SOC* display must not display *100%* (or *No Comm*), the optional ME-AGS-N must be connected and enabled (*CTRL: 03 Gen Control = AUTO*) and the *SETUP: 04J Gen 100% SOC* must also be enabled (not set to *OFF*).

Info: The *METER: 04F Since 100% Days* menu, which is calculated in the ME-AGS-N, is similar to the *METER: 05I Days Since 100%* menu (which is calculated in the router). If an AGS is installed at a later date (or the router is reconnected), the two menus will not be coordinated with each other. However, they will automatically synchronize once the BMK's *METER: 05A BMK SOC* menu reaches 100% SOC, or they can be manually synchronized by momentarily removing the network cable from the BMK.

METER: 04G Gen Hour Meter Menu

This menu displays how many hours the generator has run since this "hour meter" was last reset. This menu is helpful if you would like to keep track of how long the generator has run from a specific point; for example, after the generator has been serviced.

Note: *The Gen Hour Meter menu's timer starts when the gen run sense voltage (10-40 volts DC) from the generator to Pin 2 (+) and Pin 4 (-) is present on the AGS module.*

Info: The *Gen Hour Meter* menu's timer can register elapsed time up to 65,000 hours, and can be reset to "*0 Hours*" by pressing and holding the SELECT button for ~3 secs.

Info: The hour meter will not count if the Gen Type DIP switch inside the AGS module is set to "*2-Wire-Standby*" because this setting does not require the gen run sense voltage from the generator to the AGS.

Info: The *CTRL: 03 Gen Control* setting has no effect on the whether the hour meter is active or not.

Info: The gen hours shown in this menu are calculated in the AGS. They do not reset if the inverter or router loses power, but they do reset if the AGS module loses power.

8.2.4 Starting and Stopping the Generator

The generator can be manually started/stopped, as well as autostarted/autostopped using the available settings from your ME-ARTR.

To autostart/autostop the generator:

In order for the generator to autostart/autostop, one or more of the following autostart/autostop conditions must be pre-set (see Section 8.1):

Autostart Conditions

- 04A Gen Run DC Volts (pp. 82-83)
- 04B Gen Run Time (p. 84)
- 04C Gen Run AC Amps (pp. 84-85)
- 04D Gen Run SOC (pp. 85-86)
- 04E Gen Run Temp (pp. 86-87)
- 04H Gen Exercise (pp. 90-91)
- 04J Gen 100% SOC (pp. 92-93)

Autostop Conditions

- 04A Gen Run DC Volts (pp. 82-83)
- 04B Gen Run Time (p. 84)
- 04C Gen Run AC Amps (pp. 84-85)
- 04D Gen Run SOC (pp. 85-86)
- 04E Gen Run Temp (pp. 86-87)
- 04F Max Gen Run Time (p. 88)
- 04G Gen Quiet Time (pp. 88-89)
- 04H Gen Exercise (pp. 90-91)

To manually start the generator:

From the AGS Home screen (to access, refer to Section 8.1.1.1):

1. Press the CTRL button.
2. Turn the SELECT knob to the *03 Gen Control* menu.
3. Press the SELECT knob. The *Set Gen Control* menu displays with an arrow to the right of the current setting.
4. Turn and press the SELECT knob to select the *ON* setting. The selection arrow appears to the right of the screen. The generator should start at this time.

If the generator does not start as expected, refer to Section 8.3.

To manually stop the generator:

From the AGS Home screen (to access, refer to Section 8.1.1.1):

1. Press the CTRL button.
2. Turn the SELECT knob to the *03 Gen Control* menu.
3. Press the SELECT knob. The *Set Gen Control* menu displays with an arrow to the right of the current setting.
4. Turn and press the SELECT knob to select the *OFF* setting. The selection arrow appears to the right of the screen. The generator should stop at this time.

If the generator does not stop as expected, refer to Section 8.3.

To manually start the generator and have it automatically stop:

From the AGS Home screen (to access, refer to Section 8.1.1.1):

1. Press the CTRL button.
2. Turn the SELECT knob to the *03 Gen Control* menu.
3. Press the SELECT knob. The *Set Gen Control* menu displays with an arrow to the right of the current setting.
4. Turn and press the SELECT knob to select the *ON* setting. The selection arrow appears to the right of the screen. The generator should start at this time.

After the generator is running, rotate the SELECT knob to *AUTO* (under the *CTRL: 03 Gen Control* menu), and then press the SELECT knob to select the *AUTO* setting.

Note: *When the generator is manually started, and then changed to autostop, the SETUP: 04A Gen Run DC Volts stop settings are used to determine when the generator autostops. If the SETUP: 04A Gen Run VDC is set to OFF, the Start/Stop Delay and Stop Volts values that were entered prior to selecting OFF will still be used to autostop the generator.*

If the generator does not start or stop as expected, refer to Section 8.3.

8.2.5 ME-ARTR Router's AGS Menu Maps

This section provides the AGS menu maps available from your router. Refer to Appendix A in the back of this manual for a glossary of abbreviations that may appear on the router's LCD display.

Note: *The router enables you to access AGS METER button info from two sources: 1) View AGS meter info from the specific port to which the AGS is connected (via the AGS Home screen), 2) You can also access meter information for all ports (via the System Home screen).*

Note: *When applicable, battery voltage defaults and ranges are shown for a 24-volt battery (12-volt systems divide by 2; 48-volt systems multiply by 2).*

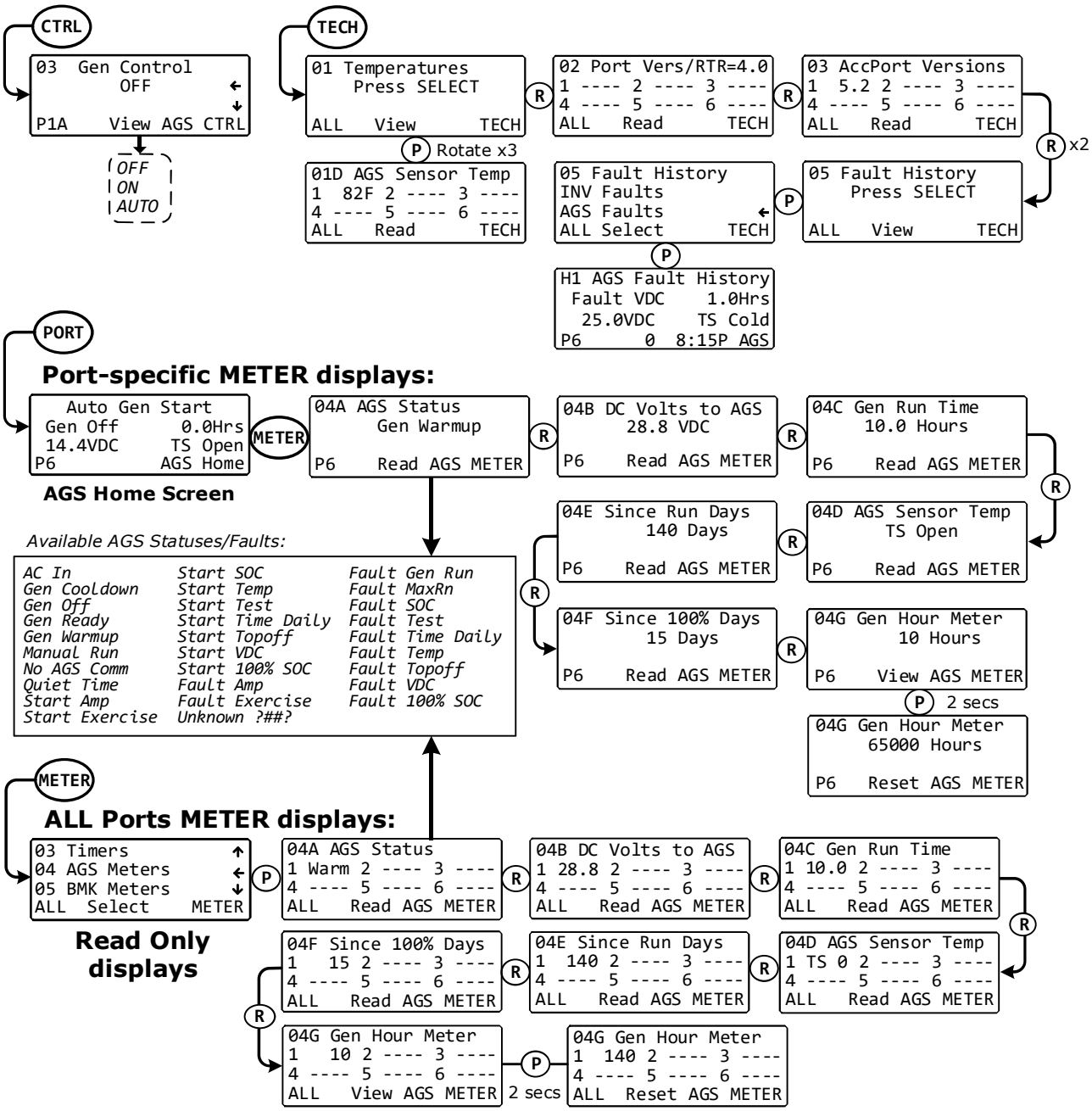

Figure 8-2, AGS PORT, CONTROL, METER, and TECH Menu Maps

Note: *The AGS-N SETUP menus are accessed via the System Home screen and PORT button; or, by pressing the SETUP button and rotating to the 04 AGS Setup menu, and then pressing the SELECT knob. Refer to the procedures below to access these menu items via the AGS Home screen.*

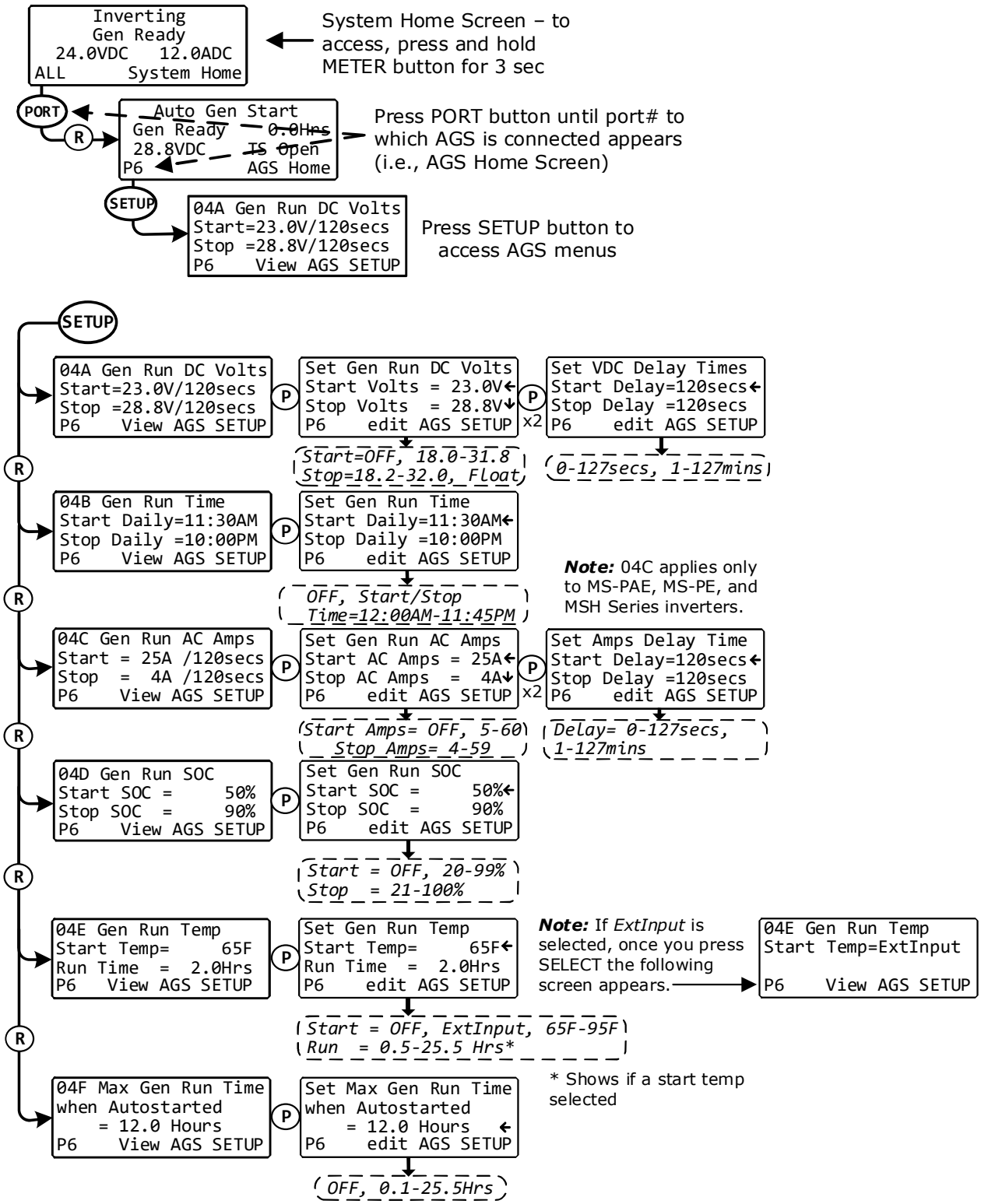

Figure 8-3, AGS SETUP Menu Maps (Section 1)

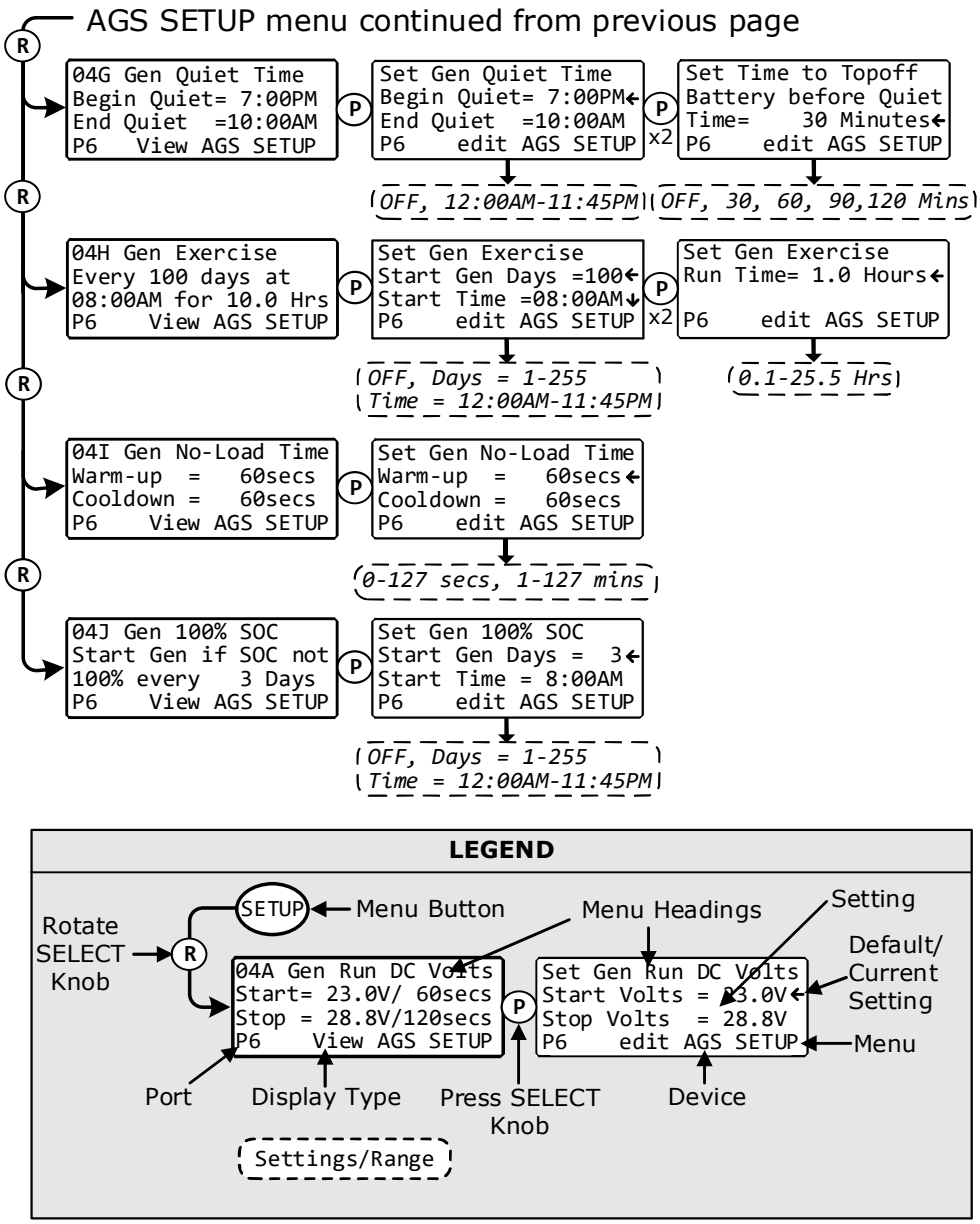

Figure 8-4, AGS SETUP Menu Maps (Section 2)

8.2.6 ME-AGS-N Router Status Messages

A status message may be an operational or fault message. Access the AGS status menu (*METER*: *04A AGS Status* menu) to view the AGS's current operating status. This menu is important when determining if the AGS is working correctly, or for troubleshooting an AGS installation.

8.2.6.1 AGS Router Operational Statuses

See Table 8-3 for AGS operational statuses that may display (depending on your router's version).

Table 8-3, AGS Router Operational Statuses

Status	Description
AC In (ACIn)	The inverter/charger is connected to another source such as a grid or an alternate generator, and is not controlled by the AGS. When *AC In* displays, the AGS is prevented or locked out from all autostarting conditions, except for when the gen needs to exercise—if enabled.
Note: *The AC In status prevents the AGS from autostarting. To enable the AGS to autostart the generator, remove any AC power connected to the input of the inverter/charger.*	
Gen Cooldown (Cooldown or Cool)	The autostop setting has been satisfied in one of the generator autostart/autostop menus, and the generator has been disconnected from the inverter. However, the generator still running until the cooldown time is met (as per *SETUP: 04I Gen No-Load Time* setting).
Gen Off (Off)	The *CTRL: 03 Gen Control* menu is set to *OFF*. This setting will not allow the AGS to autostart the generator.
Gen Ready (GenReady or Redy)	The *CTRL: 03 Gen Control* menu is set to *AUTO*, and the AGS is ready to automatically start the generator based on the active autostart settings under the *SETUP: 04 AGS Setup* menu.
Gen Warm-up (Warmup or Warm)	The AGS is attempting to start the generator and a time period has been set under the *SETUP: 04I Gen No-Load Time* setting. Once the AGS status displays as "*Warm-up*", the inverter/charger's AC input ignores any incoming AC power. This prevents the inverter/charger from loading the generator during warm-up. Once the AGS confirms the generator is running, the warm-up time setting must be met before the generator can connect to the inverter/charger.
Manual Run (Man Run or MnRn)	The generator was started manually, either by setting the *CTRL: 03 Gen Control* menu to "*ON*", or by using the start/stop switch directly connected to the generator.
Note: *The AGS determines that the generator has been manually turned on by sensing a gen run sense voltage to Terminal #2 on the AGS's 8-port terminal block. However, if the Gen Type DIP switch is set to "2-Wire Standby"—which does not require a gen run sense voltage—manually turning the generator on displays a status of AC In rather than Manual Run.*	
No AGS Comm (No Comm)	The AGS is not communicating with the inverter/router. This is a normal status if there is no AGS-N connected in the system.
Note: *If an AGS is connected, then ensure: the green READY indicator on the AGS module is on (blinking or solid) to indicate that the AGS module is getting power, the communications cable is connected from the Network port on the Magnum inverter to the NETWORK port on the ME-AGS-N, and that you have the correct communications cable.*	
Quiet Time (QuietTme or QT)	The AGS has entered Quiet Time per the *SETUP: 04G Gen Quiet Time* setting.
Note: *The generator will not autostart during Quiet Time.*	
Unknown ?##? (Unk?##? or ?##?)	The generator failed to recognize the status information transmitted by the AGS. This is normally due to an AGS module being a newer version than that of the router.

8.2.6.2 AGS Router Start Statuses

The following "Start" statuses identify the condition that autostarted the generator. If you determine the autostart condition occurred sooner than expected (or didn't want this autostart condition), refer to Section 8.1 to change (or defeat) the autostart setting.

Table 8-4, AGS Router Start Statuses

Status	Description
Start Amp (StrtAmp or SAmp)	The generator has started based on the *SETUP: 04C Gen Run AC Amps* settings.
Start Exercise (StrtExe or SExe)	The generator has started based on the *SETUP: 04H Gen Exercise* settings.
Start SOC (StrtSOC or SSOC)	The generator has started based on the *SETUP: 04D Gen Run SOC* setting.
Start Temp (StrtTemp or STmp)	The generator has started based on the *SETUP: 04E Gen Run Temp* setting.
Start Test (StrtTest or STst)	The AGS is in Test mode. Test mode may be started from the TEST button located on the AGS.
Start Time Daily (StrtTOD or STOD)	The generator has started based on the *SETUP: 04B Gen Run Time* setting.
Start Topoff (StrtToff or STop)	The generator has started based on the *SETUP: 04G Gen Quiet Time* menu's *Topoff* time setting.
Start VDC (StrtVDC or SVDC)	The generator either has started based on the *SETUP: 04A Gen Run Volts DC* settings, or was manually started and then set to AUTO to autostart.
Start 100% SOC (Strt100% or S100)	The generator has started based on the *SETUP: 04J Gen 100% SOC* settings.

8.2.6.3 AGS Router Fault Statuses

The following "Fault" statuses indicate that the generator wasn't able to start based on an expected autostart condition. Refer to Section 8.3.2 "Resolving AGS Faults using your Router" for help in diagnosing the problem.

Table 8-5, AGS Router Fault Statuses

Status	Description
Fault Amp (Falt Amp or FAmp)	The generator failed to start in Start Amps mode.
Fault Exercise (Falt Exe or FExe)	The generator failed to start in Start Exercise mode.
Fault Gen Run (FaltGnRn or FGnR)	The generator successfully started and ran for more than two minutes, but unexpectedly stopped before the AGS could automatically stop the generator.
Fault MaxRn (FaltMxRn or FMxR)	The generator has run longer than expected and has met or exceeded the *SETUP: 04F Max Gen Run Time* setting. This fault can occur when: 1) an autostop condition has been met, but the AGS was not able to stop the generator; or, 2) the autostop setting exceeded the *Max Gen Run Time* setting.
Fault SOC (Falt SOC or FSOC)	The generator failed to start in Start SOC mode.

Table 8-5, AGS Router Fault Statuses (Cont.)

Status	Description
Fault Temp (FaltTemp or FTmp)	The generator failed to start in Start Temp mode.
Fault Test (FaltTest or FTst)	The generator failed to start in Test mode.
Fault Time Daily (Falt TOD or FTOD)	The generator failed to start in Start Time mode.
Fault Topoff (Falt Top or FTop)	The generator failed to start in Start Topoff mode.
Fault VDC (Falt VDC or FVDC)	The generator failed to start in Start Volts DC mode.
Fault 100% SOC (Falt100% or F100)	The generator failed to start in 100% SOC mode.

Table 8-6, AGS Default Settings on ME-ARTR

AGS SETUP Menus	Default Settings
04A Gen Run Volts DC	Start Volts = 11.5 VDC (12v), 23.0 VDC (24v), 46.0 VDC (48v) Start Delay = 120 secs Stop Volts = 14.4 VDC (12v), 28.8 VDC (24v), 57.6 VDC (48v) Stop Delay = 120 secs
04B Gen Run Time	OFF
04C Gen Run AC Amps*	OFF
04D Gen Run SOC	OFF
04E Gen Run Temp	OFF
04F Max Gen Run Time	12.0 Hrs
04G Gen Quiet Time	OFF
04H Gen Exercise	OFF
04I Gen No-Load Time	Warm-up = 60 secs Cooldown = 60 secs
04J Gen 100% SOC	OFF

**MS-PAE, MS-PE and MSH Series models only*

8.2.6.4 AGS General Notes

If a fault condition occurs, select the *OFF* setting from the *03 Gen Control* menu. If the problem persists, refer to Section 8.3 "ME-AGS-N Router Troubleshooting (with the ME-ARTR)".

- When the *03 Gen Control* setting on the ME-ARTR is in the *OFF* position, all generator autostart functions are disabled and the AGS's STATUS indicator will also be off.
- When AGS control is set to *AUTO*, and an autostart condition occurs, it attempts an automatic generator start. This is done by closing its internal relays (based on the Gen Type selection) to control the starter—much like a person does when manually starting the generator. The starter is turned on for short periods of time and then turned off. If the AGS determines that the engine has started while cranking (STATUS indicator lights solid green), the starter is turned off after a short delay. If the engine does not start, another attempt is made to turn on the starter after a long delay period. This is repeated until the generator starts or until all its start attempts are reached, which causes the AGS to go into a fault condition (indicated by a

blinking FAULT indication on the remote and a solid red STATUS indicator on the AGS controller).

- If using the temperature autostart feature in an RV coach, set the air conditioner thermostat slightly less than the setting (*04E Gen Run Temp* menu). If using two A/C's, it is suggested that the second air conditioner thermostat be set 2° to 5° higher than the first air conditioner.
- When the generator starts successfully, the STATUS indicator on the AGS controller will turn solid green. The generator will run until an autostop condition is reached or until it is manually turned off; at which time a stop signal will be sent to the generator.
- If the gen is running when the AGS's TEST button is pressed, the gen will stop and then start again. The generator will then run for approximately 30-60 seconds before shutting off.
- There is a delay before the AGS attempts to start the generator. The delay is adjustable on volts and amps (*04A Gen Run DC Volts* and *04C Gen Run AC Amps* settings). There is no delay if the AGS attempts to start the generator when the temperature around the remote temp sensor rises to the *04E Gen Run Temp* setting.
- Several autostart/autostop settings can be active at once. However, once an autostart condition becomes active, all other autostart conditions are ignored until the specific condition that caused the generator to start (e.g., *Start AC Amps*) is satisfied by its autostop condition (e.g., *Stop AC Amps*). Once the generator has completed this autostart/autostop cycle, the AGS immediately begins to monitor for any active autostart/autostop settings again.

8.3 ME-AGS-N Router Troubleshooting (with the ME-ARTR)

This section assists you in using your router to identify a fault, and to resolve an abnormal operational condition detected within your AGS system.

8.3.1 AGS Fault Message Screens for the Router

When an AGS fault is detected, and the ARTR's FAULT LED comes on, the fault status is displayed on the LCD screen. Figure 8-5 is an example of how fault messages appear on the ME-ARTR. Use the ARTR's LCD screen and the information in this section to identify and correct the issue.

The FAULT LED lights solid red if the ARTR's display is on the port/device with the active fault, but flashes red if a different port/device has the active fault. Navigate to the port/device with the active fault—the FAULT LED turns solid red when you are on the correct port/device.

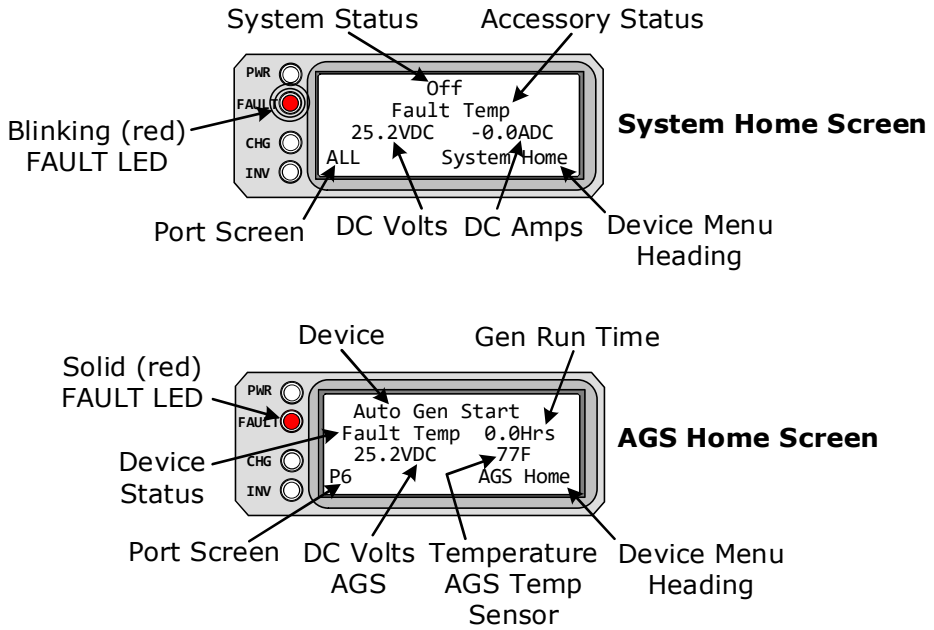

Figure 8-5, ME-AGS-N Fault Message – Router Screens

8.3.2 Resolving AGS Faults using your Router

For the nine faults that follow, refer to the Remedy immediately following the list.

- **Fault Amp** – The generator failed to autostart and run per the *04C Gen Run AC Amps* menu's start parameters.
- **Fault Exercise** – The generator failed to autostart and run per the *04H Gen Exercise* menu's start parameters.
- **Fault Gen Run** – The generator successfully started and ran for over two minutes, but the generator unexpectedly stopped before the active AGS autostop condition was finished.

Info: The AGS module determines the generator is running by monitoring the gen run sense voltage/signal. When this gen run sense voltage/signal is no longer available, the AGS thinks the gen is off or has stopped.

Info: Gen run fault detection not active if generator is manually started or if Gen Type switch is set to "2-Wire Standby"—which does not require a gen run sense voltage.

Remedy: a) <u>If the generator is still running</u>: Confirm you are getting the correct gen run sense signal to the AGS module.

b) <u>If the generator is not running</u>: Check the generator for fault codes and adequate fuel. If neither is an issue, check the generator's owner's manual for troubleshooting tips to determine why it may have shut down on its own.

- **Fault MaxRn** – The generator has run longer than expected and has met or exceeded the *SETUP: 04F Max Gen Run Time* setting. The AGS attempts to turn the generator off—after autostarting—when this fault occurs.

Info: The *Max Gen Run Time* menu uses the *SETUP: 04B Gen Run Time* settings to determine the generator's run time. Cooldown and warm-up times are not included in the *Gen Run Time* display.

Remedy: Confirm that all the autostop parameters that are active or enabled can be satisfied before the *SETUP: 04F Max Gen Run Time* setting is reached.

- If using the *SETUP: 04A Gen Run Volts DC* menu's parameters:
  – with a battery voltage setting to autostop, ensure the autostop voltage is less than the temperature-compensated absorb charge voltage.
  – with the "*Float*" setting to autostop, ensure the time that the charger is in the Bulk Charge and Absorb Charge[1] stages is shorter than the *04F Max Gen Run Time* setting.
  Refer to the *SETUP: 04A Gen Run DC Volts* section (page 82) for additional information.
  Note[1]: *Several conditions determine the length of time that the charger is in the Absorb Charge stage. Ensure the SETUP: 03D Absorb Done (Time, Amps, or SOC) setting—determines when the Absorb Charge stage is complete and enters the Float stage—is taken into account when setting the 04F Max Gen Run Time setting.*
- If using *SETUP: 04B Gen Run Time*, confirm you have not set the total run time (start time to the stop time) longer than the *SETUP: 04F Max Gen Run Time* setting.
- If using *SETUP: 04C Gen Run AC Amps*, confirm the inverter load(s) that is used to determine the *Stop AC Amps* setting is not required to run longer than the *SETUP: 04F Max Gen Run Time* setting.
- If using *SETUP: 04D Gen Run SOC*, confirm the *METER: 05A BMK SOC* reading is not "*Think'n*", but shows an actual % reading (e.g., *85%*), and the *Stop SOC* setting can be satisfied before reaching the *SETUP: 04F Max Gen Run Time* setting.
- If using *SETUP: 04E Gen Run Temp*, the temperature around the remote temperature sensor has not reached the *Gen Run Temp* setting. You need to either lower the *Start Temp* setting, determine how to cool the area (remote temp sensor location) to below the *Start Temp* setting before the *04F Max Gen Run Time* setting is reached, or increase the *Max Gen Run Time* setting.
- Lastly, confirm that your warm-up and/or cooldown time when added to your autostop condition does not exceed the *SETUP: 04F Max Gen Run Time* setting.

Info: Beginning with Version 5.2 of the ME-AGS-N, the *Max Gen Run Time* setting can be defeated. In some cases, it may be appropriate to set the *Max Gen Run Time* setting to *OFF*. However, this feature is mainly provided as a safety feature to ensure the generator doesn't run longer than the time it takes to reach the autostop conditions or to expend the generator's fuel capacity, whichever occurs first—take this into consideration if this setting is defeated.

- **Fault SOC** – The generator failed to autostart and run per the *04D Gen Run SOC* menu's start parameters.
- **Fault Temp** – The generator failed to autostart and run per the *04E Gen Run Temp* menu's start parameters.
- **Fault Test** – The generator failed to autostart and run after the red TEST button is pressed on the AGS module.

  Note: *The ME-ARTR does not provide a "test" selection, instead it can be set to manually turn the generator on and off, which can be used to test the generator wiring to the AGS.*
- **Fault Time Daily** – The generator failed to autostart and run per the *04B Gen Run Time* menu's start parameters.
- **Fault Topoff** – The generator failed to autostart and run per the *04G Gen Quiet Time* menu's *Topoff* start parameters.
- **Fault VDC** – The generator failed to autostart and run per the *04A Gen Run Volts DC* menu's start parameters.
- **Fault 100% SOC** – The generator failed to autostart and run per the *04J Gen 100% SOC* menu's start parameters.

Remedy: One of the above fault messages may display on the router when:

a) The AGS attempts to start the generator four times, but the generator failed to start and run per the specific autostart parameters; or,

b) The generator started, but did not provide the correct gen run sense signal to the AGS module. For either scenario, refer to your AGS owner's manual to troubleshoot why the generator does not start or run.

8.3.2.1 How to Clear AGS Faults

To clear the AGS fault, go to the *CTRL: 03 Gen Control* menu and select *OFF*. Once the fault is cleared, you should test the AGS/generator system by performing the AGS Functional Test—to see if the fault returns.

Note: *After troubleshooting the reason for the AGS fault, and then clearing the fault, be sure to re-enable the AGS to autostart. Go to the CTRL: 03 Gen Control menu and select AUTO. Refer to Figure 8-2.*

9.0 Using a BMK

This section discusses how to set up, operate and troubleshoot the BMK using the ME-ARTR router. Refer to the mini-index below to direct you to the appropriate section.

9.1 ME-BMK Setup (with the ME-ARTR) page 108
9.2 ME-BMK Operation/Monitoring (with the ME-ARTR) page 109
9.3 ME-BMK Troubleshooting (with the ME-ARTR) page 115

9.1 ME-BMK Setup (with the ME-ARTR)

The BMK SETUP menus can be accessed from the BMK or System Home screens (see Figure 9-2). Two settings are available in the BMK, the first sets the battery efficiency (*05A Charge Efficiency*) and the second sets the capacity of the battery bank (*05B Battery AmpHrs Size*).

Info: To access the BMK Home screen, first press and hold the METER button (~3 seconds) to display the System Home screen. From the System Home screen, press the PORT button, or rotate the SELECT knob to the port# where the BMK is connected.

- **SETUP: 05A Charge Efficiency** – The *Charge Efficiency* setting allows the battery monitor to calculate the battery's charge efficiency. The charge efficiency can be calculated automatically using the *Auto* setting, or can be calculated based on a fixed efficiency value determined by the user (see Figure 9-1).
  Default setting: *Auto*
  Range: *Auto, 50-99%*

What is Charge Efficiency? When a certain amount of energy is removed or discharged from the battery, this removed energy will need to be returned to keep the batteries at a 100% state of charge. As batteries are charged, they lose energy; either in the form of heat, or while gassing. This loss of energy while charging means the battery will not be fully charged if you only return the current that was removed. To compensate for the battery's inefficiencies while charging, a charge efficiency setting is provided. The charge efficiency setting compensates the AH I/O (AHrs In/Out) reading by ensuring the AHrs returned to the battery are greater than the AHrs removed.

Example: AH I/O display reads "000". When powering a 25-amp load for two hours, the display will show "-050". You have discharged 50 AHrs (2 x 25) from the battery. If the charge efficiency setting is 95%, then as you begin charging and return 50 AHrs, the AH I/O reading will be less than zero—indicating that the AHrs removed have not been fully returned. The 95% charge efficiency setting requires 52.5 AHrs (50/95) to be returned before the AH I/O returns to 0.

9.1.1 Adjusting the Charge Efficiency Setting

The battery monitor is shipped with the charge efficiency set to *Auto*. This allows the battery monitor to automatically calculate variables that affect the charging efficiency such as battery type, battery age, and how the batteries are maintained—which is not always constant. With the *Auto* setting, the efficiency is recalculated each time the batteries reach a 100% state of charge.

This setting can also be manually adjusted from 50% to 99% if the battery's charge efficiency is known. When using a setting other than the *Auto* setting, the battery monitor uses the manual setting to calculate the AH I/O display. For example, if you set the charge efficiency to 90% and 100 AHrs are removed from the battery, the *AH Net* display would read *000* only after 111 AHrs have been returned to the battery. However, if the charge efficiency is manually set and inaccurate, the SOC information is more inaccurate with every charge. Thus, continually monitor the AH I/O reading (along with the SOC display) under the router's METER button.

To access the AH I/O reading: From the BMK Home screen, press the METER button. The *05A BMK SOC* display appears. Turn the SELECT knob until the *05D Amps Hours In/Out* menu appears.

After several charge and discharge cycles (below 80% SOC), the AH I/O reading should be slightly positive when the SOC display reads 99%.

To view the SOC display: From the BMK Home screen, press the METER button. The *05A BMK SOC* menu appears. If the AH I/O reading is below 000 (negative number) when the SOC display reads 99%, then increase the charge efficiency setting. If the AH I/O reading is substantially above zero when the SOC display reads 99%, then decrease the charge efficiency setting.

CAUTION: The factory default charge efficiency setting is *Auto*, which allows the charging efficiency to be automatically calculated. In most circumstances, this setting determines the best charge efficiency. If you do not know your battery's charging efficiency, leave it at the factory default setting. If the setting is manually set but incorrect, the state-of-charge information becomes more inaccurate with every charge.

- **SETUP: 05B Battery AmpHrs Size** – The Battery AmpHrs (Amp-Hours) Size represents the amount of energy the battery can deliver. This setting is used by the battery monitor to help calculate the battery's SOC (State of Charge).

  Default setting: 400 AmpHrs

  Range: 200-2500 AmpHrs

Note: *It's important that the Battery AmpHrs Size setting is correct or else the calculations used to determine the battery's SOC display will be inaccurate.*

Adjusting the AmpHrs Setting – From the BMK home screen (see Info in Section 9.1), press the SETUP button. Turn the SELECT knob until the *05B Battery AmpHrs Size* display appears. Press the SELECT knob to access the *Set Battery AmpHrs Size* function. Turn the SELECT knob to adjust the amp-hours setting. Press the SELECT knob to save the new setting (see Figure 9-2).

Where do I set the AmpHrs setting? Select the setting based on the 20-hour AH capacity of your battery bank. Refer to the battery manufacturer for the 20-hour AH capacity.

How do I determine my Battery Amp-Hour capacity? The batteries should be deep-cycle type and rated either by AHrs or reserve capacity in minutes.

- Amp-hour (AH) capacity is a measurement of how many amps a battery can deliver for a specified length of time (usually 20 hours) until the voltage achieves 1.75 VDC/cell at 80°F/27°C.
- Reserve Capacity (RC) is a measure of how many minutes a battery can deliver a certain amount of current (usually 25A) and maintain a voltage above 1.75 VDC/cell at 80°F/27°C. If using the Reserve Capacity (25A), the 20-hour AH capacity can be estimated by multiplying 'minutes reserve capacity' by 50%.

Note: *For batteries in parallel strings, add the amp-hour capacity of each string (Example: three 250AH batteries in parallel = 750 AH); for batteries in series, use the amp-hour capacity of one battery (Example: three 250 AH batteries in series = 250 AH).*

9.2 ME-BMK Operation/Monitoring (with the ME-ARTR)

This section explains how the ME-BMK (Battery Monitor kit) battery monitor works, and how to use the ME-ARTR to obtain battery bank information. It also covers the various LCD displays that are related to the battery monitor and the status of the sense module's LED indicator.

Info: Battery monitor menu items are accessed via the ARTR router's BMK Home screen. For information on how to access the BMK Home screen refer to the Info in Section 9.1.

9.2.1 How does the ME-BMK Battery Monitor Operate?

The ME-BMK uses a precision resistor known as a shunt to measure current flow into and out of the battery. The shunt provides a small voltage to the BMK sense module that is proportional to the current flow. When the battery current starts flowing, the sense module measures the amount of current removed from and returned to the battery. The amount of current (or AHrs) removed or returned is displayed as the *METER: 05D Amp Hours In/Out* value. This *Amp Hours In/Out* number is compensated by the *SETUP: 05A Charging Efficiency* value that accounts for energy loses while charging, and is one of the factors used to determine the battery's State Of Charge (SOC).

The battery's state of charge—which is the best indicator of the condition of the batteries—is indicated on the *METER: 05A BMK SOC* display. This display shows that the batteries are fully charged (i.e., SOC = 100%) once the following three conditions have been met:

1. The charging voltage has stabilized over a period of time (see Figure 9-1).
2. The charging current has decreased to a low % of the AHr capacity—normally less than 2%.
3. The AHrs that were removed from the battery are within 1% of fully being returned.

When the BMK sense module is first connected, the batteries will need to be fully charged (i.e., SOC = 100%) at least once to establish a SOC reference point. While this reference point is being calculated, the *METER: 05A BMK SOC* display shows "*Think'n*" to indicate that the SOC reference point is calculated. After the batteries are fully charged, the display changes from "*Think'n*" to "*100%*" and begins to provide accurate SOC percentage values. After the batteries have reached 100% SOC and have discharged ≥0.5% of the battery capacity setting, the charge efficiency value is recalculated and the *Amp Hours In/Out* read-out resets to the recalculated value.

Info: To help maintain accuracy of the METER: *05A BMK SOC* display and keep the batteries in good condition, they must be charged to 100% occasionally (~x1/week).

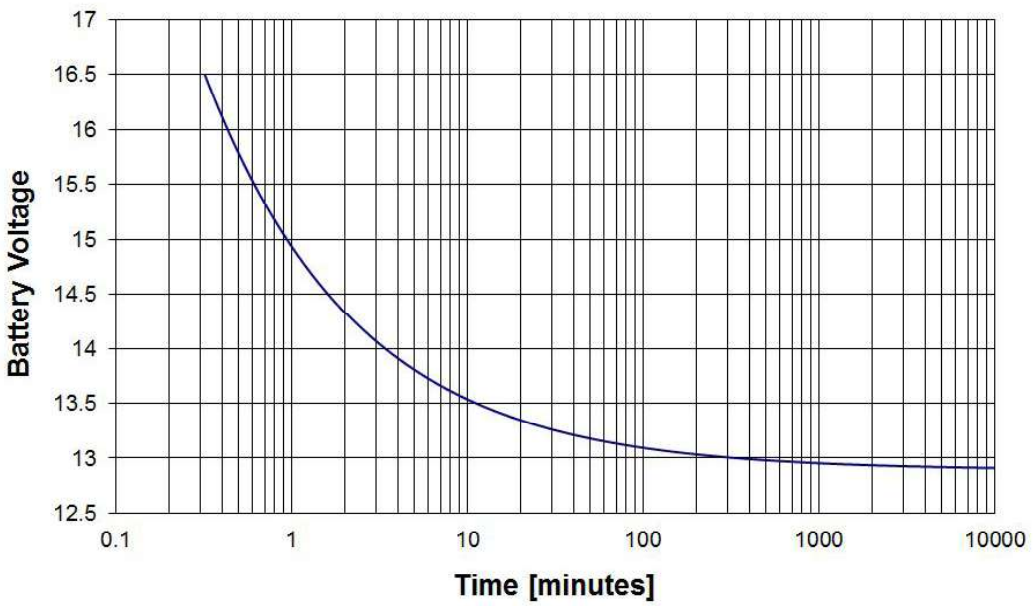

Figure 9-1, Ending Battery Voltage Versus Time

9.2.2 BMK METER Menu Items (with ME-ARTR)

From the BMK Home screen, press the METER button, and then turn the SELECT knob on the ME-ARTR router to access the different meters that determine the status of the battery system.

Info: If multiple BMKs are connected, the System Home screen displays information from the BMK connected to the LOWEST numbered port. For example, if a BMK is connected to the network port on an inverter which is connected to Port 1 (P1Acc), and another BMK is connected to Port 5 on the router (P5), the System Home screen will show the information from the BMK connected to P1Acc.

METER: 05A BMK SOC

This read only menu either displays the calculated battery SOC (State of Charge) for the connected battery bank, "Think'n" (to indicate the SOC is being calculated), or identifies a fault condition.

Note: *Refer to Section 9.2.4 for information on BMK statuses/faults.*

The range is 0% to 100%, where 100% is a fully charged battery and at 0% the battery is completely discharged. When the BMK sense module is first connected, the display will show "*Think'n*", to indicate that the SOC reference point is being calculated. After the batteries are fully charged, the display will change from "*Think'n*" to "*100%*" and begin to provide accurate SOC percentage values.

Note: *If the sense module is disconnected from power, this display resets to "Think'n" and the batteries require another full charge before this display begins providing SOC percentage information.*

METER: 05B DC Volts-BMK

This meter displays DC volts at the BMK input. The range is from 07.00 to 70.00 volts (± 0.02).

METER: 05C DC Amps-BMK

This meter displays the real-time charge current (amps into battery) or discharge current (amps out of battery) as measured through the BMK shunt. Charging is shown as a positive (+) number and discharging is shown as a negative (–) number. The range is from ±0.1 to 999 amps (±1.0%).

METER: 05D Amp Hours In/Out

This meter displays the AHrs returned to or removed from the battery. When this value is positive, it represents AHrs returned to the battery during any subsequent charging. A negative value represents AHrs removed from a full battery. The range is ±32,768 AHrs. When using the charge efficiency's *Auto* setting, the AH I/O value is recalculated after the battery has been fully charged (100% SOC) and ≥0.5% of the battery capacity has been discharged. If the sense module is disconnected from power, the displayed AH I/O value resets to zero.

Info: The *Amp Hours In/Out* display correlates with the *SETUP: 05B AmpHrs Size* setting to determine the *05A BMK SOC* display. *Example:* running a 10-amp load for three hours, the display shows "*-30 AH*". When you begin charging, the display will count from – 30 AHrs back toward 0 AHrs.

METER: 05E Resettable AHrs

This meter displays the total AHrs removed from the battery since the sense module was first connected or since last reset. This display can be used as a battery load indicator to help identify and monitor the battery load consumption. The range is 0 to 65,535.0 AHrs (0.1 amp-hour resolution).

To reset the AHrs value to 0.0, either disconnect the sense module from power, or press and hold the rotary SELECT knob for ~2 seconds when this display is shown. After this display has been reset, it will begin calculating and displaying new rAH out values.

METER: 05F Total kAHrs Out

This meter displays the total AHrs removed from the battery since the sense module was first connected or since it was last reset. This display can be used as a battery service life indicator. The value is displayed in 0.1k [or 100 AHrs ("k" equals 1000)] resolution up to a maximum of 6,553.5k AHrs (6,553,500 AHrs).

To reset the kAHrs value to 0.0, either disconnect the sense module from power, or press and hold the rotary SELECT knob for ~2 seconds when this display is shown. After this display has been reset, it will begin calculating and displaying new kAHrs out values.

METER: 05G Minimum VDC

This menu displays the lowest battery voltage since the last reset. The voltage shown on the display is averaged each second, and is helpful when troubleshooting or detecting an over-discharge condition. To reset this display, press and hold the rotary SELECT knob for ~2 seconds while the *Minimum VDC* display is shown. If the battery monitor is not connected or not communicating, the display will show "*0.0*".

METER: 05H Maximum VDC

This menu displays the highest battery voltage since the last reset. The voltage shown is averaged each second, and this allows you to check your charging system (e.g., battery charger, charge controller, etc.,) to ensure the charging voltage has been attained. This is also helpful when troubleshooting or detecting if an overcharge condition has occurred. To reset this display, press and hold the rotary SELECT knob for ~2 seconds while the *Maximum VDC* display is shown. If the battery monitor is not connected or not communicating, the display shows "*0.0*".

METER: 05I Days Since 100%

This read-only menu displays the number of days since the battery was at 100% SOC, and is calculated in the router.

Info: This display resets either once the battery SOC reaches 100%, power to the router is lost, or the data communications from the BMK is lost.

Info: The *METER: 05I Days Since 100%* menu uses information from the *METER:05A BMK SOC* menu to determine the last time the battery SOC was at 100%.

Info: For the *METER: 05I Days Since 100%* to increment, an optional battery monitor (ME-BMK/ME-BMK-NS) must be connected and the *METER: 05A BMK SOC* meter must not display *100%* [must display a valid SOC value – *Think'n*, *No Comm*, or any BMK fault (i.e., *Factory Fault*, *Power-up Fault*, or *Unknown Fault ##*) are <u>not valid</u> SOC values].

Info: The *METER: 05I Days Since 100%* menu is similar to the *04F Since 100% Days* menu (calculated in AGS). If an AGS is installed at a later date (or router is reconnected), the two menus are not coordinated with each other. However, they will be automatically synchronized once the BMK's *METER: 05A BMK SOC* menu reaches 100% SOC (or you can manually synchronize by momentarily removing the network cable from the BMK).

9.2.3 ME-ARTR Router's BMK Menu Maps

Figures 9-2, 9-3 & 9-4 are a complete overview of the battery monitor settings and information displays available from the ME-ARTR router's SETUP and METER menus. Refer to Appendix A in the back of this manual for a glossary of abbreviations that may appear on the router's LCD display.

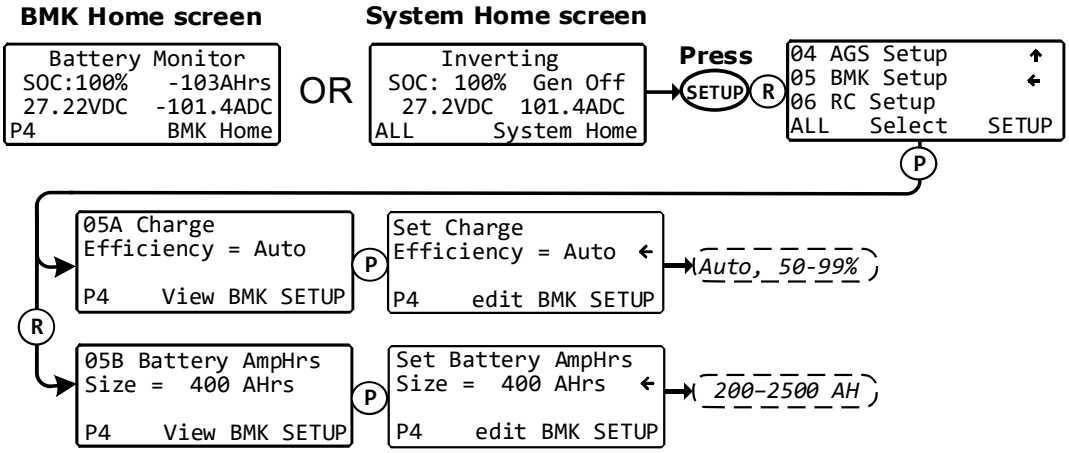

Note: The BMK must be connected and communicating with the ME-RTR for the BMK displays to appear. If no BMK, then "NO BMK Present" displays.

Figure 9-2, BMK SETUP Menu Maps

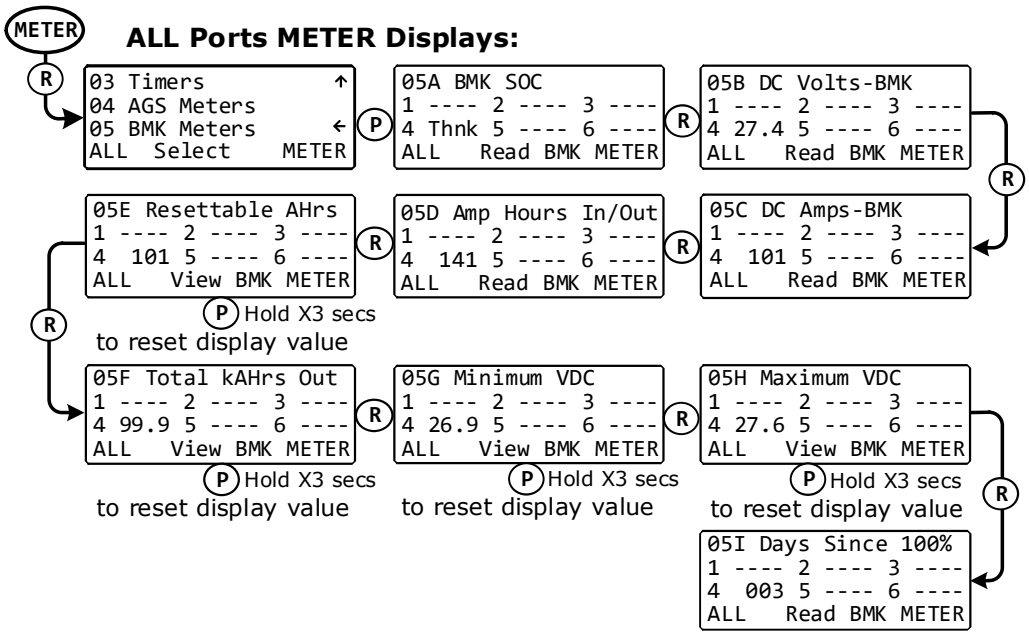

Figure 9-3, BMK METER Menu Maps (ALL Ports)

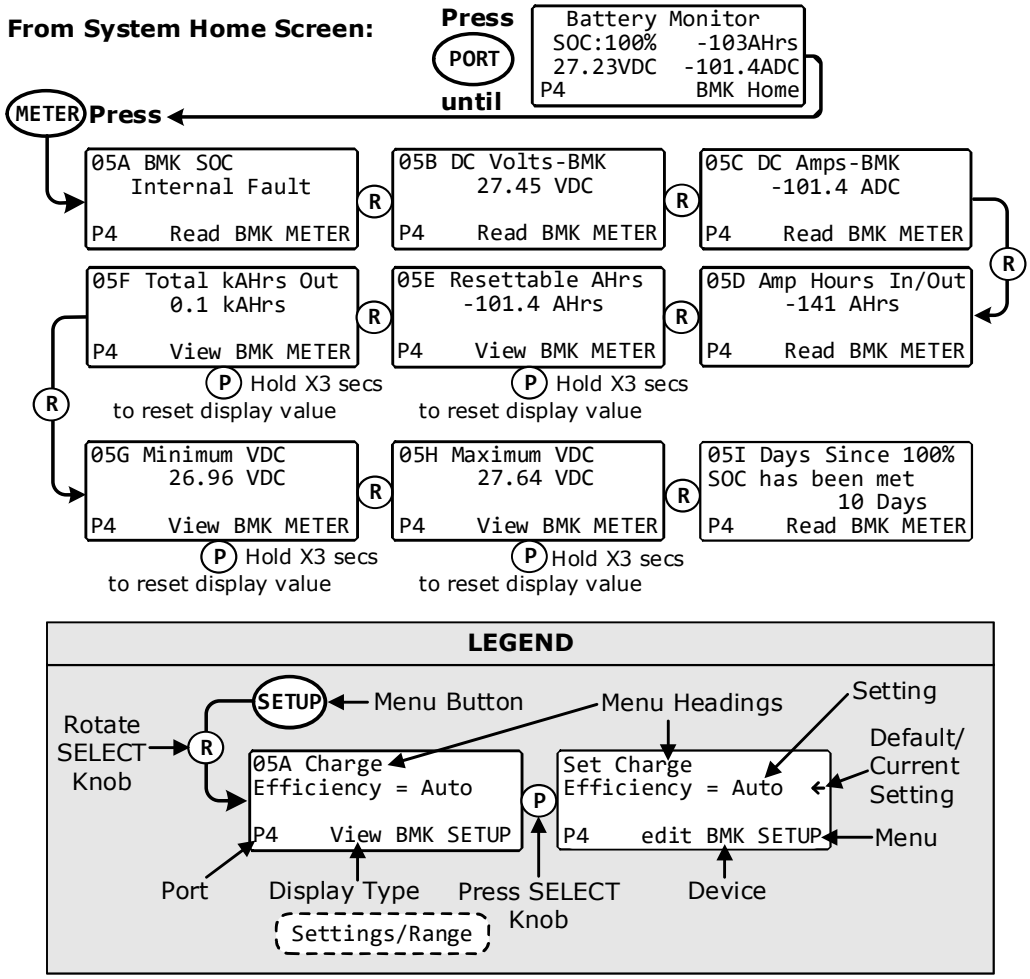

Figure 9-4, BMK METER Menu Map (Port-specific)

9.2.4 BMK Status Messages (with the ME-ARTR)

A status message may be an operational or fault message. Access the BMK Home screen (see INFO Section 9.1 to access) to view the BMK's current operating status. The status is important when determining if the BMK is working correctly, or for troubleshooting a BMK installation.

9.2.4.1 BMK Router Operational Statuses

Refer to Table 9-1 below for a brief description of the BMK operational statuses that may display on your router.

Table 9-1, BMK Router Operational Statuses

Status	Description
No BMK Present	The BMK is not communicating with the inverter/router. This is a normal status if there is no BMK connected in the system. If a BMK is installed, view the BMK sense module's LED. a) If the LED is green, disconnect the terminal block for 5 seconds, and then reconnect it to ensure the terminal block is correctly seated into the sense module. b) If the LED is blinking red, there is no communication or there is an unrecognizable communication on the network. Check the communication cable—ensure it is connected correctly. If the ME-BMK communication cable is missing, a standard 2-conductor telephone cable may be temporarily substituted.
Think'n (Thnk)	When the BMK Sense Module is first connected, the batteries need to be fully charged (i.e., SOC = 100%) to establish a SOC reference point. The BMK Sense Module is disconnected from power and the batteries require a full charge before the router display begins providing SOC percentage information.
###% (SOC:###%)	The batteries are fully charged, the display has changed from "Think'n" to "100%" and is ready to provide accurate SOC percentage values.

9.2.4.2 BMK Router Fault Statuses

The following "Fault" statuses indicate that the battery monitor is not working correctly. Refer to Section 9.3.2 "Resolving BMK Faults using the Router" for help in diagnosing the problem.

Table 9-2, BMK Router Fault Statuses

Status	Description
Factory Fault (FacFault or FacF)	The BMK has lost its factory-set internal calibration reference.
Power-up Fault (PwrFault or PwrF)	A fault occurred during the BMK's power-up sequence.
Unknown Fault ## (Fault## or F ##)	A fault code that is not recognized by the router.

9.3 ME-BMK Troubleshooting (with the ME-ARTR)

This section assists you in using the router to identify and resolve any faults or abnormal operational conditions within your BMK system.

9.3.1 BMK Fault Message Screens for a Magnum Router

When a BMK fault is detected, the ARTR's FAULT LED (red) comes on and the fault status is shown on the LCD display. Figure 9-5 is an example of how fault messages appear on the ME-ARTR. Use the ARTR's LCD screen and the information in this section to identify and correct the issue.

The FAULT LED lights solid red if the ARTR's display is on the port/device with the active fault, but blinks if a different port/device has the active fault. Navigate to the port/device with the active fault—the FAULT LED turns solid red when you are on the correct port/device.

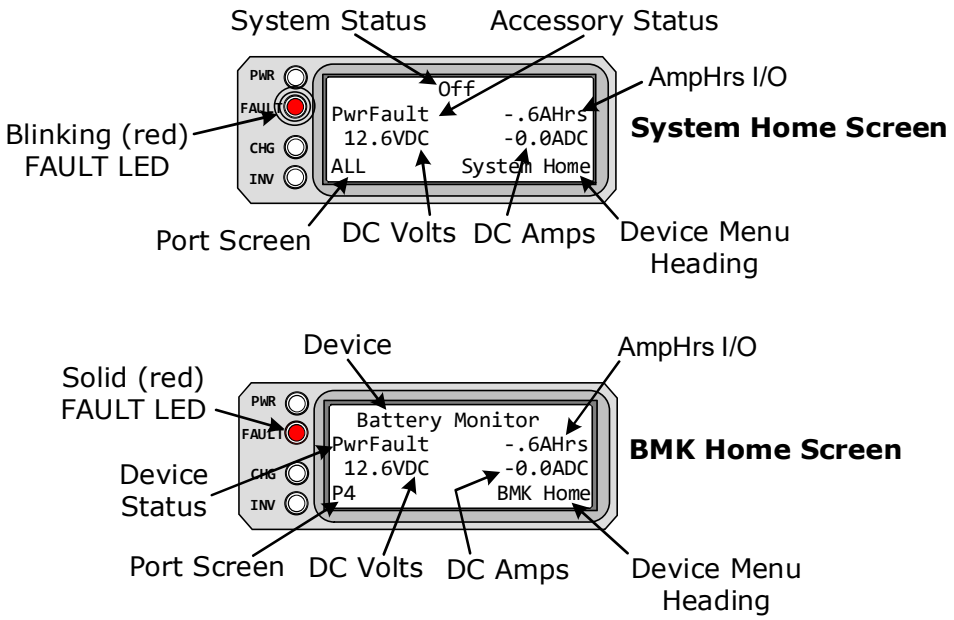

Figure 9-5, ME-BMK Fault Message – Router Screens

9.3.2 Resolving BMK Faults using the Router

For the three BMK faults that follow, refer to its respective remedy.

- **Factory Fault (FacFault)** – The BMK has lost its factory-set internal calibration reference.

  Remedy: Reset the BMK by removing all power from the BMK. After resetting the BMK, if the Factory Fault remains or returns, the BMK requires repair at a DMX Power authorized service center.

- **Power-up Fault (PwrFault)** – The BMK's power-up sequence failed.

  Remedy: 1) Ensure the current sense wires are connected into pins 1 (blue wire) and 2 (orange wire), and the voltage wires are connected to pins 3 (black/negative) and 4 (red/positive). 2) Unplug the 4-port terminal block from the Sense Module, and then check for the correct DC voltage on pins 3 (–) and 4 (+). The voltage must be between 7 to 70 volts DC depending on the nominal voltage of the inverter.

- **Unknown Fault ## (Fault##)** – This fault message displays when the inverter/charger has sent a fault code that is not recognized by the router.

  Remedy: Call the Technical Support department at DMX Power (800-553-6418) for assistance in determining and understanding the actual fault status.

10.0 Attaching a Remote Control

A remote control (ME-ARC or ME-RC) can be connected to the router and used in a different location to assist with monitoring your system. Only one remote control can be used, and it must be connected directly to one of the router ports and programmed (per *SETUP: 06 RC Setup* menu) to indicate which port it is monitoring.

Info: When using a remote control, it cannot be connected to the inverter's Network or Remote port, it must be connected to a communications port (P1-P6) on the router.

When used in conjunction with the router, a ME-RC or ME-ARC has limited functions. The remote control, when connected to the router, acts only as a remote monitor. It monitors the port it is set up to display, turns all parallel inverter/chargers on/off, and displays METER and TECH info.

If a ME-ARC remote control is connected, it can be used in a remote location as a remote on/off switch, and can assist in controlling a generator that is connected to an AGS-N module using the FAVS button. The ME-ARC does not control the inverter/chargers via the CTRL button, nor can the SETUP button be used—all SETUP and CTRL features or functions must be done using the CTRL and SETUP button on the router.

Info: When the ME-ARC is connected to the router, the FAVS menu can provide access to menus that are normally locked out. The *Gen Control* menu—when used under the FAVS menu— is the only one that is tested and guaranteed to work. The menus that are under the CTRL and SETUP buttons are normally locked out, but may have been saved in the FAVS menu. These non-tested menus may conflict with the router settings and should not be used to set up or configure the router.

SETUP: 06 RC Setup

No setup features are allowed from the remote control; all setup must be done using the router. The remote control can be plugged into any port (P1-P6), and can monitor any port to which an inverter is connected. However, it must first be assigned to that port in order to monitor it. See Figure 10-1 for help in accessing the RC Setup menu.

Default: *System* (appears as the assigned port for the remote control and means the remote control monitors the System Home port.

Range: *System, Port 1 – Port 6* (shows any port activity connected to an inverter—means the remote monitors the specific inverter on the designated port).

Note: *It is recommended that the ME-RC or ME-ARC is set to monitor "System" in most installations.*

To assign a different port, press the SELECT knob and rotate to the desired port (P1-P6). Press the SELECT knob to save the port selection.

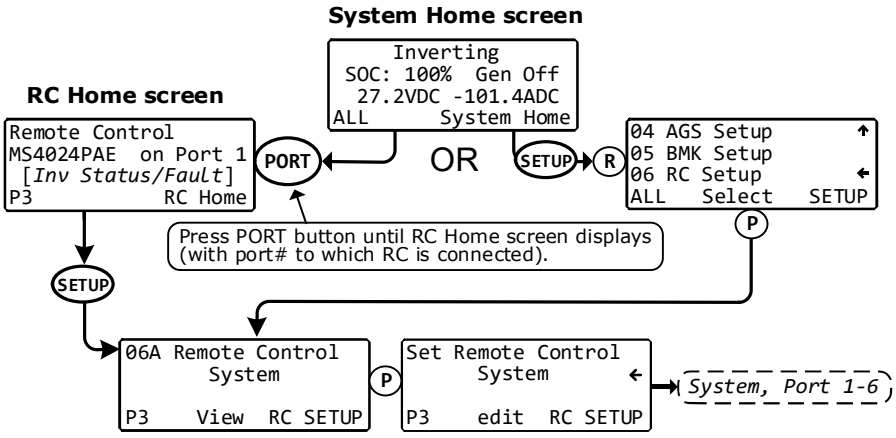

Note: The remote (ME-RC/ME-ARC) must be connected and communicating with the ME-RTR for the remote displays to appear. If no remote, then "NO Remote Present" displays.

Figure 10-1, Accessing the RC Setup Menu

11.0 Using an ACLD

This section discusses how to configure and monitor the Magnum Energy AC Load Diversion controller (ACLD) using the ME-ARTR router. Refer to your ACLD owner's manual (PN: 64-0062) for additional information on setup and operation procedures.

IMPORTANT: An ACLD must be connected and communicating with the ME-ARTR in order to monitor its operation. If the ACLD is not communicating or no ACLD is connected, "*No ACLD Present*" appears when accessing the *METER: 06 ACLD Meters* menu (unless the *TECH: 08 Show all Menus* menu is set to "*YES*"). Refer to Section 3.2.5 for more info on the *TECH: 08* menu.

11.1 Setting Up the ACLD using the ME-ARTR

During Standby and Active modes, the ACLD controller is in charge of monitoring and regulating the battery voltage and determining the battery's absorption charge time. Use the ME-ARTR router's SETUP button to set the amount of time that the battery is in the Absorption stage. This is accomplished using the router's *SETUP: 03D Absorb Done Time* menu (see page 37).

Also, when a Magnum inverter is first turned on, its automatic Search feature is enabled. To ensure the transfer from Inactive to Standby/Active mode occurs smoothly, the router's *SETUP: 02A Search Watts Sensitivity* setting should be turned to *OFF* (see page 26).

11.2 Monitoring the ACLD using the ME-ARTR

This section covers the menus under the ME-ARTR's METER button that enable you to monitor the ACLD controller's operation.

11.2.1 ME-ARTR's ACLD METER Button Menus

Press the ME-ARTR's METER button, rotate the SELECT knob to *06 ACLD Meters*, and then press the SELECT knob to view the following menus.

METER: 06A ACLD Status

This read-only menu displays the ACLD's current status. These statuses (listed below) identify what state the ACLD is currently in—only one displays at a time (see also Figure 11-1).

Note: *For specific information on each operational and fault status, refer to Table 11-1 & Section 11.3.2, respectively.*

Info: This menu is important when determining if the ACLD is working correctly, or for troubleshooting an ACLD installation. Refer also to Section 11.3.

Operational Status:

- Active - Absorb
- Active - Bulk
- Active - Float
- Inactive
- No Comm (ACLD not present)
- Standby - Absorb
- Standby - Bulk
- Standby - Float

Fault Status:

- Desat Fault
- High Current
- High VAC In
- No Load
- Output Short
- Overcurrent
- Overtemp

METER: 06B ACLD Power Diverted

This read-only menu displays the amount of current diverted to the loads connected to the ACLD.

METER: 06C ACLD Temperature

This read-only menu displays the ACLD's internal temperature.

METER: 06D Target Volts/Battery Temperature

This read-only menu displays the voltage regulation set-point after it has been compensated based on the battery temperature sensor (BTS) reading shown.

METER: 06E ACLD-40 Version

This read-only menu displays the software version of the ACLD controller.

11.2.2 ME-ARTR Router's ACLD-specific TECH Menus

Press the ME-ARTR's TECH button, and rotate the SELECT knob to access:

TECH: 01 Temperature (rotate SELECT knob until *ACLD Temperature* displays)

- **01E ACLD Temperature** – Displays temperature of the ACLD load diversion controller plugged into the NETWORK port on the inverter (per *METER: 06C ACLD Temperature* display).

TECH: 02 Versions/TECH: 03 AccPort Versions – rotate the SELECT knob to the port to which the AGS is connected.

- **#.#** – Displays the software version of the ACLD connected to the Magnum network (displays "*0.0*" if the router does not sense an ACLD).

11.2.3 ACLD Menu Maps

The diagram below is a complete overview of the ACLD information displays available from the ME-ARTR router's METER button ACLD menu. Refer to Appendix A in the back of this manual for a glossary of abbreviations that may appear on the router's LCD display.

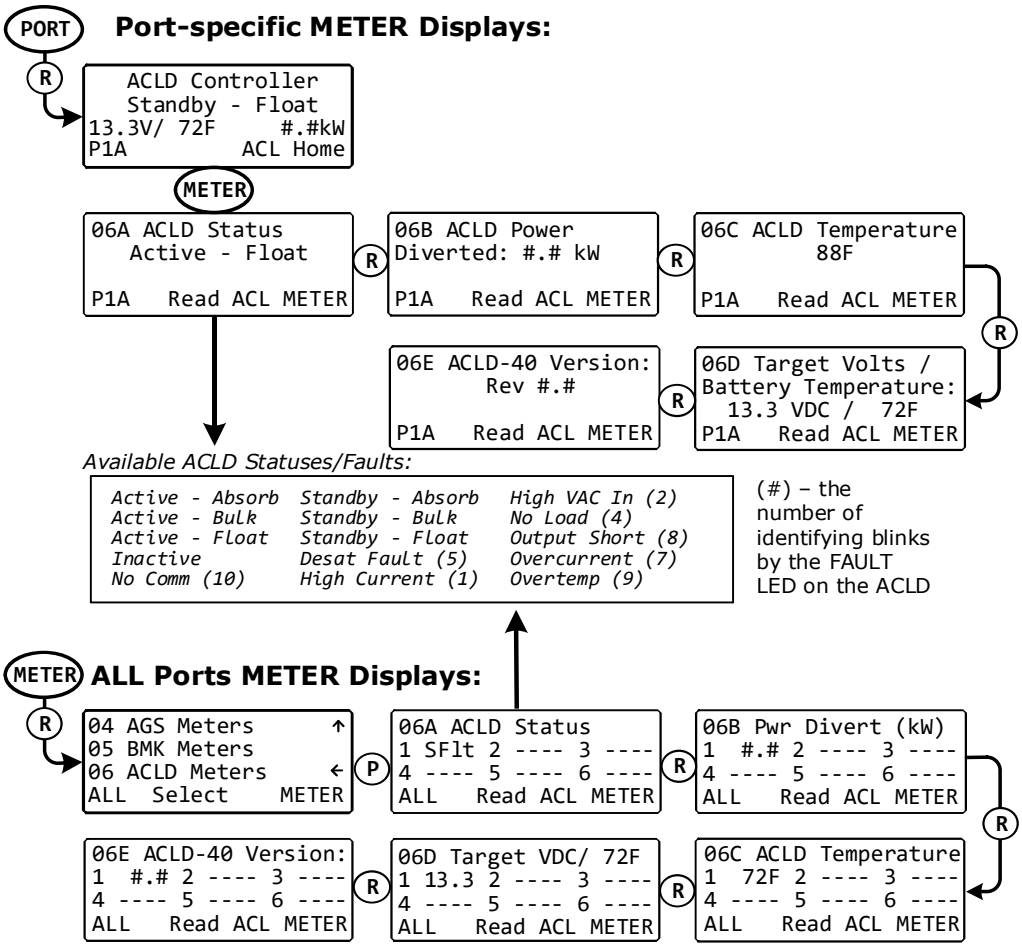

Note: The ACLD must be connected and communicating with the ME-ARTR for the ACLD displays to appear. If no ACLD is connected, then "NO ACLD Present" displays.

Figure 11-1, ACLD METER Menu Map

11.2.4 ACLD Router Status Messages

A status message may be an operational or fault message. View the ACLD's current operating status using the router's *METER: 06A ACLD Status* menu. This menu is useful in determining if the ACLD is working correctly, or for troubleshooting an ACLD installation.

Note: *"Fault statuses" indicate that the ACLD is not operating as intended. Refer to Section 11.3.2 "Resolving ACLD Faults using the ME-ARTR" to identify and diagnose the problem.*

11.2.4.1 ACLD Router Statuses

Refer to Table 11-1 for a brief description of the possible ACLD operational statuses that may display (depending on your router).

Table 11-1, ACLD Router Operational Statuses

Status	Description
Active-Absorb	Current is actively being diverted to the external load to regulate the battery bank at the *Absorb Volts* setting*****. The ACLD will remain in the Absorb stage until the *SETUP: 03D Absorb Done Time* setting has been satisfied.
Active-Bulk	If the battery voltage begins rising quickly, the ACLD activates and starts diverting current in an attempt to keep the voltage from rising above the *Absorb Volts* setting*****. The ACLD remains in the Bulk stage until the battery voltage has reached the *Absorb Volts* setting.
Active-Float	Current is actively being diverted to the external load to regulate the battery bank at the *Float Volts* setting*****. The ACLD remains in this stage unless the battery voltage falls to a low voltage, which re-initiates another Bulk stage.
Inactive	The ACLD is on, but inactive (not actively regulating the battery voltage) because utility power is connected to the Magnum inverter.
No Comm	The ACLD is not communicating with the inverter/router. This is a normal status if there is no ACLD connected in the system. If an ACLD is installed, you may have a bad cable ("*No ACLD Present*" displays).
Standby-Absorb	The ACLD is not actively diverting current, but the battery voltage has reached the *Absorb Volts* setting*****. The ACLD remains in the Absorb stage until the *SETUP: 03D Absorb Done Time* setting has been satisfied, then goes into the Standby-Float stage.
Standby-Bulk	The ACLD is not actively diverting current, but the battery voltage is below the *Absorb Volts* setting*****. The ACLD remains in the Bulk stage until the battery voltage has reached the *Absorb Volts* setting, then goes into the Standby-Absorb stage.
Standby-Float	The ACLD is not actively diverting current, but the battery voltage is now regulating at the lower float voltage level—after being at the higher absorb voltage level for the required period—to prevent the battery from being overcharged. While in this status, if the battery voltage falls to a very low level, another Bulk/Absorb regulation stage will start.

****** *– These settings are determined by the battery type settings in the Magnum inverter—which are communicated to the ACLD.*

11.3 ACLD Troubleshooting using the ME-ARTR

This section assists you in using your router to identify a fault and to resolve an abnormal operational condition detected within your ACLD system.

11.3.1 ACLD Fault Message Screens

When an ACLD fault is detected (i.e., ACLD's LED blinks), navigate to the *METER: 06 ACLD Meters/06A ACLD Status* menu to view the fault status. Figure 11-2 is an example of how ACLD fault messages appear on the ME-ARTR router. Use the router's LCD screen, your ACLD owner's manual, and the information in this section to identify and correct the issue.

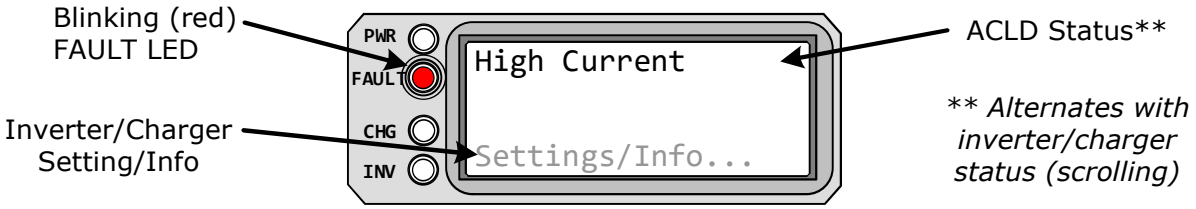

Figure 11-2, ACLD Fault Message (Example)

11.3.2 Resolving ACLD Faults using the ME-ARTR

For the listed faults below, refer to their respective remedy.

- **Desat Fault** – Hardware saturation has occurred—indicates a possible catastrophic failure.

  Remedy: This fault requires a reset of the ACLD. Press the ON/OFF switch on the side of the ACLD controller to remove power to the unit, and then press the ON/OFF switch again to restore power. If fault recurs, contact DMX Power for service.

- **High Current Fault** – The current is at least 30% above rated current. This may be the result of a load that is not sized correctly, or may be a bad power board.

  Remedy: Ensure that the load is connected. Press the ON/OFF switch on the side of the ACLD controller to remove power to the unit, and then press the ON/OFF switch again to restore power.

- **High VAC In Fault** – The AC input voltage is above 275 VAC.

  Remedy: This fault automatically clears once AC input voltage falls below 260 VAC.

- **No Load Fault** – No loads detected on either output terminals (or min. current flow to loads).

  Remedy: Check to ensure that the loads are sized and connected correctly.

- **Output Short Fault** – A shorted output to loads has been detected.

  Remedy: Check to ensure that the loads are sized and connected correctly. See the ACLD owner's manual for load sizing criteria.

- **Overcurrent Fault** – The current has reached an extremely high level (about twice the rated current). Possibly the result of too big of a load.

  Remedy: Check to ensure that the loads are sized and connected correctly. Press the ON/OFF switch on the side of the ACLD controller to remove power to the unit, and then press the ON/OFF switch again to restore power. See the ACLD owner's manual for load sizing criteria.

- **Overtemp Fault** – The unit temperature has risen above 194°F/90°C—will automatically reset once temperature falls below 158°F/70°C.

  Remedy: This fault automatically clears once the temperature falls below 158°F/70°C. See the ACLD owner's manual for load string criteria.

12.0 Using a PT Charge Controller

Pressing the SETUP button provides access to the menu items and settings that enable you to configure your PT charge controller. This section discusses how to set up and monitor the PT charge controller using the ME-ARTR router. It also covers other PT controller menu options that are available using this router. Refer to your PT controllers owner's manual for more information on setup and operation procedures (PN: 64-0067).

IMPORTANT: The PT controller must be connected and communicating with the ME-ARTR in order to set up and/or control its operation. If the PT controller is not communicating or there is no PT connected, "*No PT Present*" appears when accessing the *METER: 07 PT Meters*, *SETUP: 07 PT Setup* or the *CTRL: 05 PT Control* menus (unless the *TECH: 08 Show all Menus* menu is set to "*YES*"). Refer to Section 3.2.5 for more information on the *TECH: 08* menu.

12.1 Setting Up the PT Controller using the ME-ARTR

Use the ME-ARTR's SETUP button to identify a battery type and the *Absorb Done*, *PT Max Charge Rate/Time, Bulk Start*, *PT Relay VDC*, *PT Relay SOC*, *PT Alarm* and *PT PowerSave* settings for your PT controller. Review each menu item to determine if you need to adjust any settings to meet your system requirements.

Info: If *LINKED* appears on the ME-ARTR for the *07A Battery Type* and *07B Absorb Done* displays, then that indicates that *"YES"* has been selected from the *SETUP: 01J Link PT Charge Settings* menu. For additional information on linking the inverter's charge settings with the PT controller's charge settings, refer to page 26.

- **07A Battery Type:** This setting selects the battery type, which determines the battery charge profile and ensures the batteries are receiving the proper charge voltage. The charge voltage settings are fixed when using the *GEL*, *Flooded*, *AGM1*, or *AGM2* selections, but can be adjusted if using the *CC/CV* or *Custom* selections.

  Default setting: *Flooded*

  Range: *AGM1, AGM2, Flooded, GEL, CC/CV, Custom*

  ◇ **Battery Type (GEL, Flooded, AGM1, or AGM2)** – When the battery type selection is *GEL* (for Gel batteries), *Flooded* (for liquid lead acid batteries), *AGM1* (for Lifeline AGM batteries), or *AGM2* (for East Penn/Deka/Discover/Trojan AGM batteries), the charge voltage level for the Absorption, Float, and EQ charge modes are fixed as shown in Table 3-1—depending on the battery type selected and the nominal inverter battery voltage.

  Info: The voltage settings shown in Table 3-1 are based on a connected Battery Temperature Sensor (BTS) at a temperature of 77°F/25°C, or without a connected BMK. If the BTS is connected, the actual charge voltage will increase if the temperature around the BTS is below 77°F/25°C, and decrease if higher than 77°F/25°C. This ensures the batteries receive the correct charge voltage regardless of temperature.

  ◇ **Battery Type (CC/CV)** – The *CC/CV* selection provides a 2-stage (i.e., Constant Current/ Constant Voltage) charging method with an adjustable charge voltage and a setting that limits output current—if needed. It consolidates all the battery charge settings that are required for Constant Current and Constant Voltage charging cycles.

  Note: *CC/CV settings only display if* CC/CV *is selected from the* 07A Battery Type *menu.*

  Info: If *CC/CV* has been selected from the *07A Battery Type* menu, the *Absorb Done* and the *Volts* and *SOC* settings (under the *07D Bulk Start* menu) are no longer accessible and display "*CC/CV Controlled*" when selected. This is to prevent charging conflicts that could occur while in the CC/CV profile.

  CAUTION: Whenever the CC/CV battery type is selected, some settings—within the menus that are no longer accessible—are internally linked to the CC/CV settings and can be automatically changed. Because settings can be automatically changed once CC/ CV has been selected, if a different battery type is selected, then all charge settings must be reviewed to ensure they are correct for the new battery type selection.

■ **Max Chg Rate** – Sets the maximum charge amperage allowed to charge the batteries during the CC/CV charge stage. The range of settings (20-990 ADC) are provided to limit the charge current to the battery bank, which helps prevent battery overheating caused by charging at too high a charge rate.

Default: *Rate = 100%*

Range: *0-100%*

Info: If the BMK (Battery Monitor Kit) is connected, the DC amps value determined by the BMK (under *METER: 05C DC Amps-BMK*) will be used by the *Set Max Charge Amps* setting instead of the PT controller's current (shown under *METER: 07E To Batt Now – Amps*)—as it is more accurate (+/- .1 ADC).

■ **CV Chg Volts** – Sets the voltage level at which the charger will hold the batteries during the Constant Voltage stage.

Default: *13.8 VDC (12v), 27.6 VDC (24v), 55.2 VDC (48v)*

Range: *12.0-16.0 VDC (12v), 24.0-32.0 VDC (24v), 48.0-64.0 VDC (48v)*

¤ **Set CV Chg Done** – These selections determine when the Constant Voltage stage of charging (displayed as "*Absorb Charging*") is finished. If using the *Hold CV Chg VDC* setting, the battery voltage is held at the *Set CV Charge Volts* setting. If using the *CV Chg Done Time* or *CV Chg Done Amps* selections, once the Constant Voltage charge stage is finished, it transitions to a Silent charge stage (displayed as "*Float Charging*"). After entering the Silent charge stage, the charger automatically stops charging, but is still actively monitoring the battery voltage. The charger will remain "Silent" until the battery voltage drops to the *Set Recharge Volts* setting, at which time the charger will start another Constant Current/ Constant Voltage charge cycle (see Figure 12-1).

Default: *Time*

Range: *Time, Amps, Hold CV Chg VDC*

* **Set CV Charge Done Time** – This setting determines how long the charger holds the battery voltage at the *CV Charge Volts* setting—based on a set time period. When using time, the battery bank size typically determines the length of the *CV Chg Done Time* setting. The larger the battery bank, the longer the time needed to ensure fully charged batteries. If the setting is 0.0 hrs, the charger transitions to Silent charge stage immediately after the charge voltage setting has been reached. If the setting is from 0.1 to 25.5 hrs, the charger transitions to the Silent charge stage after the battery voltage has been at the charge voltage setting for the selected time. Use Table 3-2 to assist in selecting the *CV Chg Done Time* setting based on the AHr capacity of your battery bank.

Note: *After choosing* Set CV Charge Done Time*, the* Set Max CC/CV Char Time *and* Set DC Volts to Recharge *settings must be determined (see next page).*

Default: *2.0 Hrs*

Range: *0.1-25.5 Hrs*

* **Set CV Charge Done Amps** – This setting—which requires a battery monitor to be installed—determines how long the charger holds the battery voltage at the *CV Charge Volts* setting—based on a minimum current setting (also known as "return amps"). During the Constant Voltage charge mode, as the battery charges, the current from the charger slowly decreases. When this current decreases below the *CV Chg Done Amps* setting, the charger transitions to the Silent charge stage. Most battery manufacturers recommend taking approximately 5% of the total battery bank size, and consider the battery totally charged when the charger's return amps drops to this level. Check with your battery manufacturer to find out what the correct return amp settings are for your batteries.

Note: *After choosing* Set CV Charge Done Amps*, the* Set Max CC/CV Char Time *and* Set DC Volts to Recharge *settings must be determined (see next page).*

Default: *20 ADC*

Range: *0-250 ADC*

Info: The ME-BMK battery monitor is required if the *CV Chg Done Amps* setting is used. The *CV Chg Done Amps* setting relies on the *METER: 05C DC Amps-BMK* value to determine when to transfer out of the Constant Voltage charge mode.

Info: Setting the *CV Chg Done Amps* value to zero keeps the charger in the Constant Voltage charge mode until the *Max CC/CV Time* setting (under *SETUP: 07A Battery Type: CC/CV*) is reached.

□ **Set Max CC/CV Char Time** – This setting is a safety feature that ensures abnormal conditions do not cause the charger to hold batteries at a high voltage for a prolonged period of time. This menu sets a maximum time the charger is allowed to operate in either the Constant Current (Bulk charging) or Constant Voltage (Absorb charging) charge modes. If the charger reaches the *Max CC/CV Time* setting, it will transition to the Silent charge stage (status is *Float Charging*). The *OFF* selection can be used if there is an application where 25.5 hrs is not long enough.

Default: *12.0 Hrs*

Range: *OFF, 0.1-25.5 Hrs*

CAUTION: If using "*OFF*", the batteries can be held at a high voltage for an extended time. Monitor the batteries to ensure they are not overcharged.

Info: The internal timer for the *Set Max Char CC/CV Time* feature increments when the battery voltage is above the *Float Volts* setting (from the *SETUP: 07A Battery Type* menu) and resets when the controller goes into Float charging.

□ **Set DC Volts to Recharge** – This setting determines the DC voltage set-point to which the batteries are allowed to fall—while the charger is in the Silent charge stage (status is *Float Charging*)—before the charger restarts and recharges to the *CV Charge Volts* setting. This setting should be slightly above the lowest DC volts level to which you want the batteries to fall. Typically, the lowest DC volts to which the batteries are allowed to fall is 12.0 to 12.2 VDC (12-volt systems), 24.0 to 24.4 VDC (24-volt systems), and 48.0 to 48.8 VDC (48-volt systems), respectively.

Default: *12.0 VDC (12v), 24.0 VDC (24v), 48.0 VDC (48v)*

Range: *9.0-16.0 VDC (12v), 18.0-32.0 VDC (24v), 36.0-64.0 VDC (48v)*

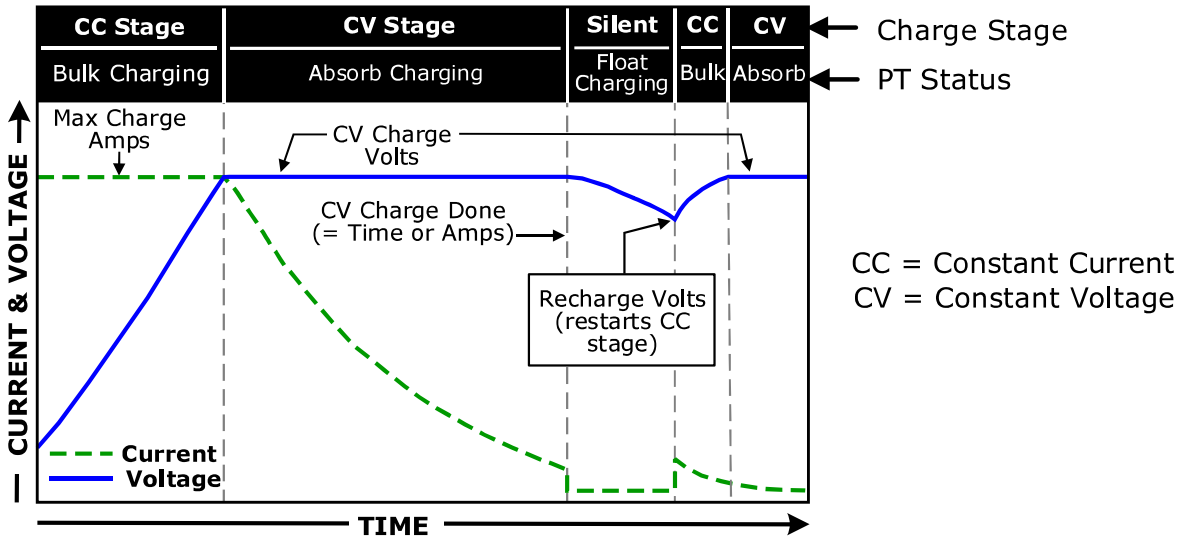

Figure 12-1, CV Charge Done Time/Amps (PT Controller)

* **Hold CV Chg Volts** – This setting holds the battery voltage at the *CV Charge Volts* setting. This is for a system that requires a constant charge voltage to be present at all times (see Figure 12-2).

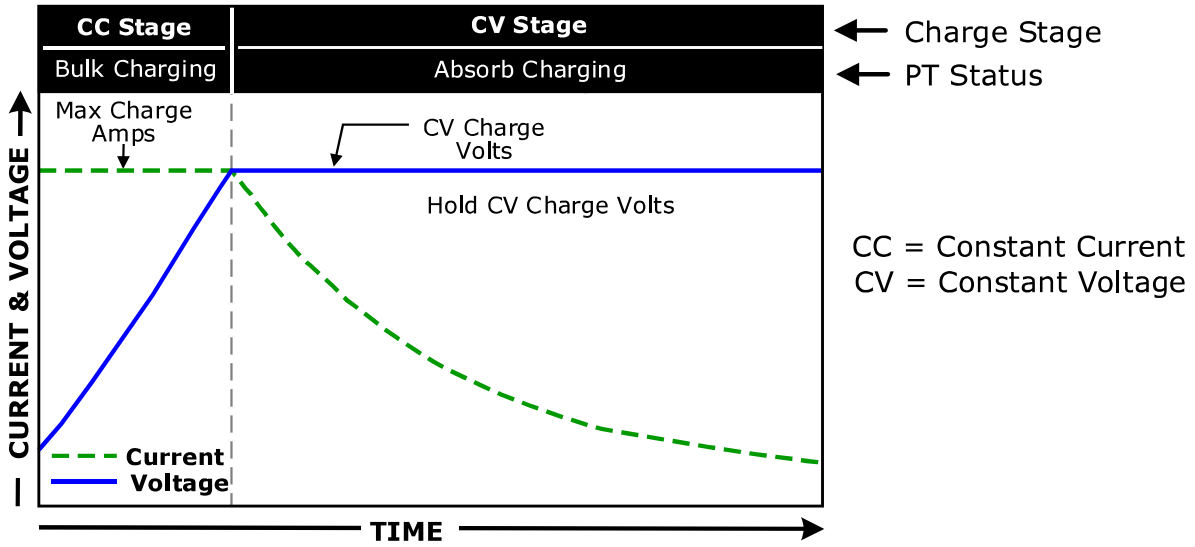

Figure 12-2, Hold CV Charge Volts (PT Controller)

◇ **Battery Type (Custom)** – This selection allows you to individually adjust the float, absorb, and equalization charge voltage settings and to set an equalization time for your batteries. This allows the multi-stage charging method (see Figure 12-3) to be customized specifically for your batteries. Use the following Custom battery settings to determine the battery's absorption, float, and equalization voltages, and the maximum amount of time spent equalizing.

Custom Chg Settings

■ **Set Absorb Volts** – Sets the level at which the charging voltage is held constant during the Absorption charge.
Default: *12.0V (12v), 24.0V (24v), 48.0V (48v)*
Range: *12.0-16.0V (12v), 24.0-32.0V (24v), 48.0-64.0V (48v)*

■ **Set Float Volts** – Sets the level at which the charging voltage is held constant during the Float charge.
Default: *13.2V (12v), 26.4V (24v), 52.8V (48v)*
Range: *12.0-16.0V (12v), 24.0-32.0V (24v), 48.0-64.0V (48v)*

■ **Set EQ Volts** – Sets the level at which the charging voltage is held constant during the Equalization charge.
Note: EQ Volts *setting cannot be set lower than the* Absorb Volts *setting, or more than 2 volts (12v systems), 4 volts (24v systems), or 8 volts (48v systems) above the* Absorb Volts *setting.*
Default: 14.0V (12v), *28.0V (24v), 56.0V (48v)*
Range: *12.0-16.0V (12v), 24.0-32.0V, 48.0-64.0V (48v)*

■ **Set EQ Done Time** – Sets the time (duration) the battery charges at the *EQ Volts* setting.
Default: *4.0 Hrs*
Range: *0.1-25.5 Hrs*

Info: The internal timer for the *EQ Done Time* setting counts when the battery voltage is equal to the *EQ Volts* setting, and clears when the controller status goes to *Float Charging*. It clears automatically when the EQ charging finishes, or can be manually cleared by selecting *Float Start* (under the *CTRL: 05A PT CHG Ctrl* menu).

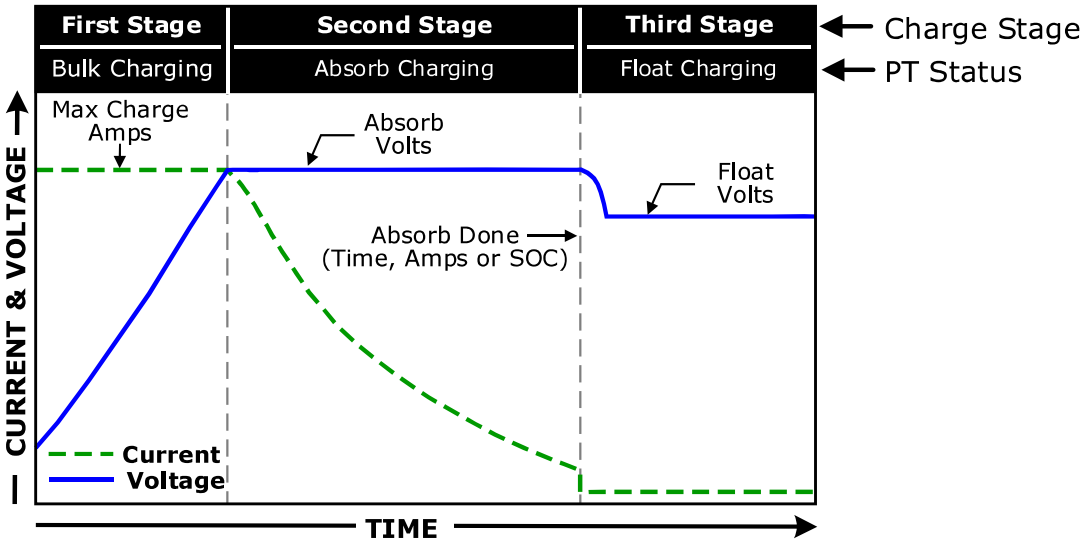

Figure 12-3, Multi-Stage Charging (PT Controller)

- **07B Absorb Done (Time, Amps, SOC)** – This setting identifies whether time, amps, or SOC are used to determine when the second stage of battery charging (Absorption) is finished. Absorption is the charge process that attempts to fully charge the batteries. Once this stage is finished, the charge cycle transitions to the third charge stage (Float).

  Note: *If "*CC/CV Controlled*" displays on this menu's screen, you will not be able to adjust the settings as "*CC/CV*" has been selected as the battery type from the* 07A Battery Type *menu.*

  Info: If the Absorb stage is short or terminated, the batteries may not receive a full charge. In contrast, if the Absorb stage is too long the batteries may be overcharged. Either scenario may lead to poor performance or damage to the batteries. Contact the battery manufacturer to ensure the best charge settings are used for your batteries.

  ◇ **Set Absorb Done Time** – *Absorb Done Time* is used when a specific period of time is determined to be best for ending the Absorption stage. When using time, the size of the battery bank amp-hour capacity typically determines the length of the *Absorb Done Time* setting. The larger the battery bank, the longer the absorb time needed to ensure a full charge to the batteries. Taking specific gravity readings of the batteries and adjusting the absorb time may be needed in order to obtain the appropriate absorb time for your battery type and battery bank capacity. See Table 3-2 to help select the *Absorb Done Time* setting based on the amp-hour capacity of your battery bank.

  Default setting: *2.0 Hrs*

  Range: *0.1-25.5 Hrs*

  ◇ **Set Absorb Done Amps** – This setting—which requires a battery monitor to be installed—determines how long the charger holds the battery voltage at the *CV Charge Volts* setting—based on a minimum current setting (also known as "return amps"). During Absorb charge mode—as battery charges—the current required by the battery decreases. When the return amps decrease below the *Absorb Done Amps* setting, the charger transfers from the Absorption charge stage to the Float charge stage. Most battery manufacturers use a specific formula to determine the return amps needed to fully charge their type of battery. The formula used by most manufacturers to absorb the batteries is C/20, where C=Battery Bank's Total Amp Hours. Basically, they take approximately 5% of the total battery bank size and consider the battery totally charged when the charger's return amps drops to this level. Check with your battery manufacturer to find out what the correct return amp settings are for your batteries.

  Default setting: *20 ADC*

  Range: *0-250 ADC*

Info: The ME-BMK battery monitor is required if the *Absorb Done Amps* setting is used. The *Absorb Done Amps* setting relies on the *METER: 05C DC Amps-BMK* value to determine when to transfer out of the Absorption charge stage.

◇ **Set Absorb Done SOC** – This setting can be used if a battery monitor kit is installed and you want to use the SOC (State of Charge) of the battery bank to determine when the batteries are fully charged. During the Absorption charge mode, once the *METER: 05A BMK SOC* menu reaches the *Absorb Done SOC* setting, the charger transfers to the Float charge stage.

Note: *The SOC is the best way to determine when the batteries are fully charged (any DC loads or other charge sources connected to the battery bank will not affect the SOC reading).*

Default setting: *100%*
Range: *50-100%*

Info: A ME-BMK is required in order to use the *Absorb Done SOC* setting. If a valid SOC number is not displayed under the *METER: 05A BMK SOC* menu (i.e., *Think'n*, *No Comm*, *Power-up Fault*, or *Factory Fault* are not valid SOC numbers), then the PT reverts back to *Absorb Done Time*.

- **07C Max Charge** – This setting determines the maximum current allowed to charge the batteries during Bulk, Absorption, Float and Equalize charging, and sets a maximum time the PT controller is allowed to operate in either charge mode.

◇ **Max Charge Rate** – This setting is provided as a percentage of the PT controller's maximum charging capability (100%=100 amps). It will limit the charge current to the battery bank to prevent battery overheating caused by charging at too high a charge rate. A 100% setting uses the maximum charging capability of the PT controller to charge the batteries if needed, while a 0% setting minimizes the charging current.

Default setting: *100%*
Range: *0-100%*

Example: The maximum charge rate of the PT controller is 100 amps and you need to limit the charge rate to 60 amps. Choose a *Max Charge Rate = 60%* (i.e., 60 amps = 60% of 100 amps).

How do I determine where to set my Maximum Charge Rate? Generally, set to a C/5* rate (C = the total AH capacity of the battery bank—using the 20-hour AH rate). The C/5 rate is usually used when the objective is to quickly charge the batteries (i.e., 400 AH ÷ 5 = 80 amp max charge rate). A lower rate such as C/20* is used when the batteries need to be slowly charged.

** C/5 or C/20 rate – charge rates are commonly expressed as a ratio of the total amp-hour (AH) capacity of the battery bank. For example, with a 400 AH battery bank (C = 400), the C/5 charge rate is 80 A (400/5 = 80 A).*

CAUTION: The C/5 or C/20 charge rate settings are general guidelines on how to set your battery charge rate. For specific charge rate requirements, refer to your battery manufacturer.

CAUTION: If multiple controllers are used on a single battery bank, ensure that the total charge rate from all controllers is limited to the maximum charge rate needed for your battery bank. The *Max Charge Rate* setting only limits the charging on each controller individually, not on all controllers.

◇ **Max Charge Time** – This setting is a safety feature that ensures abnormal conditions will not cause the controller to hold batteries at a high voltage for a prolonged period of time. This menu sets a maximum time the controller is allowed to operate in either the Bulk, Absorption, or Equalization charge modes. If the controller reaches the maximum charge time setting, it will transition to the Float charge stage. The "*OFF*" selection can be used if there is an application where 25.5 hrs is not long enough.

Default setting: *OFF*
Range: *OFF, 0.1-25.5 Hrs*

CAUTION: If using "*OFF*", the batteries can be held at a high voltage for an extended time. Monitor the batteries to ensure they are not overcharged.

Info: If the time the charger has been in Bulk, Absorption, or EQ charge modes exceeds the *Max Charge Time* setting, the "*PT Max Charge Time*" scrolls across the LCD display.

Where should I set my Max Charge Time? To ensure a complete charge cycle is accomplished, adjust the *Max Charge Time* setting to a time period that will normally be longer than the settings in the following SETUP menu items: *07B Absorb Done Time/Amps/SOC*. The *Max Charge Time* setting has priority over these menus and will stop the charge cycle once that setting is satisfied.

Example: Max Charge Time set at 6 hours, but the *Absorb Done Time* is set at 8 hours. After 6 hours in the Absorption charge cycle, the charger then transitions to the Final Charge stage.

- **07D Bulk Start** – The settings available from this menu allow the PT controller to automatically start a Bulk charge cycle based on different conditions (i.e., daily at sunup, battery voltage, or battery SOC). One, two, or all three of these conditions can be enabled to determine when a Bulk charge cycle begins.

  ◇ **Daily/SunUp** – This menu provides the option to set the PT controller to start the Bulk charge cycle each new day at sun-up.
  Note: *A "new day" is defined as: for a networked PT = after midnight, for a standalone PT = two hours of no sun.*
  Note: *If the* Daily/SunUp *bulk start condition is set to* No *(disabled), on a new day the PT controller stays in the same charge mode as the previous day.*
  Default setting: *YES*
  Range: *YES, NO*

  ◇ **Low VDC** – This menu provides the option to set a DC voltage level that will start the Bulk charge cycle when the battery voltage decreases to or below this setting continuously for at least one minute. This one minute delay time is to prevent a Bulk charge cycle when a heavy load causes the battery to momentarily dip.
  Default setting: *10.0 VDC (12v), 20.0 (24v), 40.0 VDC (48v)*
  Range: *OFF, 9.0-16.0 VDC (12v), 18.0-32.0 VDC (24v), 36.0-64.0 VDC (48v)*
  Note: *If "*CC/CV Controlled*" displays on this menu's screen, you will not be able to adjust the settings as "*CC/CV*" has been selected as the battery type from the* 07A Battery Type *menu.*

Where should I set Bulk Start – Low VDC? The Bulk Start voltage must be high enough to not over-discharge the battery, but low enough to keep from starting the Bulk charge unnecessarily. Typically, battery voltage SOC charts show approximately 12.2 VDC (for a 12-volt system) to be approximately 50% of the battery capacity. However, these charts show the battery at "rest", meaning it has no load connected and has been at rest for a minimum of 30 minutes. While this voltage is accurate under these at rest conditions, this same voltage with a load applied means the battery is well above 50% SOC. Normally, the battery is loaded (inverter connected or DC loads), so the voltage used to determine 50% battery capacity should be set much lower than what is shown on typical battery voltage charts. A typical bulk start voltage setting would be between 11.0 VDC - 11.5 VDC (for a 12-volt system).

Info: The *Bulk Start – Low VDC* feature uses the DC voltage displayed from the *METER: 07C PT Volts* menu to determine when to start another Bulk cycle.

◇ **SOC** – This menu requires the ME-BMK to be installed and sets the battery's SOC level to start the Bulk charge cycle. The SOC value is provided from the attached battery monitor and is shown on the *METER: 05A BMK SOC* menu display. The SOC level is considered the best overall method for determining when to start another Bulk charge cycle. Since the ME-BMK already uses voltage, time, and current to determine the true SOC of the batteries, there is little guesswork or calculating needed to determine what settings to use.
Default setting: *80%*
Range: *OFF, 50-100%*

Note: *If* "CC/CV Controlled*" displays on this menu's screen, you will not be able to adjust the settings as* "CC/CV*" has been selected as the battery type from the* 07A Battery Type *menu.*

Info: The *METER: 05A BMK SOC* menu's meter must have a valid SOC number for the Bulk Start – SOC feature to determine when to start the Bulk charge cycle based on the battery SOC. Under the *METER: 05A BMK SOC* menu, Think'n, No Comm, or any BMK fault (i.e., Factory Fault, Power-up Fault, or Unknown Fault ##) are not valid SOC numbers.

Where should I set Bulk Start – SOC? Most battery manufacturers recommend that a deep-cycle battery should not be discharged below 50% SOC. Set the *Bulk Start – SOC* level to 50%, or if you do not want to discharge the batteries quite as much, set it to 60% SOC.

PT Relay Engage/Disengage: The PT Aux Relay has three contacts, N.O. (Normally Open), COM (COMmon), and N.C. (Normally Closed). This means this relay has two sides; COM to N.O. is one side, and COM to N.C. is the other side. Having two sides means either side can be open or closed at any time, so using the terms "open" or "close" doesn't appropriately describe the relay status.
When describing this relay's contact status or operation, the terms "engage" (or "engaged") and "disengage" (or "disengaged") are used. When the PT controller energizes the relay to engage, the COM to N.O. contact closes, and the COM to N.C. contact opens. When the PT Aux Relay is no longer energized, it disengages, the COM to N.O. contact opens, and the COM to N.C. contact closes.

- **07E PT Relay VDC** – The Aux Relay in the PT controller becomes a battery voltage-controlled relay when *VDC* is selected from the *CTRL: 05B PT Aux Relay* menu. It can be programmed to engage or disengage on DC volts with an adjustable delay using the following settings.
  Note: *If more than one PT controller is connected in your system, you can view/edit the data for each individual controller. See Figure 12-8 for instructions on navigating this menu.*
  ◇ **Relay Engage VDC** – This setting is the battery voltage trip point at which the *Relay Engage Delay* time begins. Once the battery voltage has reached this setting continuously for the duration of the *Relay Engage Delay* setting, the PT Aux Relay contacts will engage (N.O. to COM closed, N.C. to COM opened). This setting can be below or above the *Relay Disengage Volts* setting, depending on if you want the PT Aux Relay to work as active low or active high.
  Default setting: *10.0 VDC (12V), 20.0 VDC (24V), 40.0 VDC (48V)*
  Range: *8.0-17.0 (12V), 16.0-34.0 (24V), 32.0-68.0 (48V)*
  ◇ **Relay Engage Delay** – This setting determines how long the *Relay Engage Volts* parameter must be continuously maintained before the PT Aux Relay engages. Use this setting to delay the time that the relay engages once the battery voltage trip point has been reached—so the PT Aux Relay does not cycle unnecessarily.
  Default setting: *10 Sec*
  Range: *0-127 Sec, 1-127 Min (1-sec increments up to 127 sec, then 1-min increments)*
  ◇ **Relay Disengage VDC** – This setting is the battery voltage trip point at which the *Relay Disengage Delay* time begins. Once the battery voltage has reached this setting continuously for the duration of the *Relay Disengage Delay* setting, the PT Aux Relay contacts disengage (N.O. to COM opened, N.C. to COM closed). This setting can be below or above the *Relay Engage Volts* setting, depending on if you want the PT Aux Relay to work as active low or active high.
  Default setting: *14.0 VDC (12V), 28.0 VDC (24V), 56.0 VDC (48V)*
  Range: *8.0-17.0 (12V), 16.0-34.0 (24V), 32.0-68.0 (48V)*
  ◇ **Relay Disengage Delay** – This setting determines how long the *Relay Disengage Volts* parameter must be continuously maintained before the PT Aux Relay disengages. Use this setting to delay the time that the relay disengages once the battery voltage trip point has been reached—so the PT Aux Relay does not cycle unnecessarily.
  Default setting: *10 Sec*
  Range: *0-127 Sec, 1-127 Min (1-sec increments up to 127 sec, then 1-min increments)*

- **07F PT Relay SOC –** When SOC is selected from the CTRL: 05B PT Aux Relay menu, the Aux Relay in the PT controller can be programmed to engage or disengage based on the SOC percentage of your battery bank using the following settings.

  Note: *Requires the optional ME-BMK (Battery Monitor Kit) to be installed.*

  Note: *If more than one PT controller is connected in your system, you can view/edit the data for each individual controller. See Figure 12-8 for instructions on navigating this menu.*

  Info: The *METER: 05A BMK SOC* menu's meter must have a valid SOC number for the Bulk Start – SOC feature to determine when to start the Bulk charge cycle based on the battery SOC. Under the *METER: 05A BMK SOC* menu, Think'n, No Comm, or any BMK fault (i.e., Factory Fault, Power-up Fault, or Unknown Fault ##) are not valid SOC numbers.

  ◇ **Engage SOC** – This setting is the SOC% value that causes the PT Aux Relay contacts to engage (N.O. to COM closed, N.C. to COM opened). This setting can be below or above the *Relay Disengage SOC* setting, depending on if you want the PT Aux Relay to work as active low or active high.

  Default setting: *50%*
  Range: *20%-100%*

  ◇ **Disengage SOC** – This setting is the SOC% value that causes the PT Aux Relay contacts to disengage (N.O. to COM opened, N.C. to COM closed). This setting can be below or above the *Relay Engage SOC* setting, depending on if you want the PT Aux Relay to work as active low or active high.

  Default setting: *100%*
  Range: *20%-100%*

- **07G PT Alarm** – The alarm in the PT controller can be programmed to be a high or low battery voltage alarm when VDC is selected from the *CTRL: 05C PT Alarm Control* menu. Use the following settings to adjust the battery voltage levels (with an adjustable delay) that determine when the alarm turns on and off.

  Note: *If more than one PT controller is connected in your system, you can view/edit the data for each individual controller. See Figure 12-8 for instructions on navigating this menu.*

  ◇ **Set PT Alarm VDC (ON Volts)** – This setting is the battery voltage trip point at which the *Alarm ON Delay* time begins. Once the battery voltage has reached this setting continuously for the duration of the *Alarm ON Delay* setting, the alarm will turn on. This setting can be below or above the *Alarm OFF Volts* setting, depending on if you want the alarm to work as active low or active high.

  Default setting: *10.0 VDC (12V), 20.0 VDC (24V), 40.0 VDC (48V)*
  Range: *8.0-17.0 (12V), 16.0-34.0 (24V), 32.0-68.0 (48V)*

  ◇ **Set PT Alarm Delay (ON Delay)** – This setting determines how long the *Alarm ON Volts* parameter must be continuously maintained before the alarm turns on. Use this setting to delay the time that the alarm turns on once the battery voltage trip point has been reached—so the alarm does not turn on unnecessarily.

  Default setting: *10 Sec*
  Range: *0-127 Sec, 1-127 Min (1-sec increments up to 127 secs, then 1-min increments)*

  ◇ **Set PT Alarm VDC (OFF Volts)** – This setting is the battery voltage trip point at which the *Alarm OFF Delay* time begins. Once the battery voltage has reached this setting continuously for the duration of the *Alarm OFF Delay* setting, the alarm turns off. This setting can be below or above the *Alarm ON Volts* setting, depending on if you want the alarm to work as active low or active high.

  Default setting: *14.0 VDC (12V), 28.0 VDC (24V), 56.0 VDC (48V)*
  Range: *8.0-17.0 (12V), 16.0-34.0 (24V), 32.0-68.0 (48V)*

◇ **Set PT Alarm Delay (OFF Delay)** – This setting determines how long the *Alarm OFF Volts* parameter must be continuously maintained before the alarm turns off. Use this setting to delay the time that the alarm turns off once the battery voltage trip point has been reached—so the alarm does not turn off unnecessarily.

Default setting: *10 Sec*

Range: *0-127 Sec, 1-127 Min (1-sec increments up to 127 secs, then 1-min increments)*

- **07H PT Power Save Display** – The PowerSave feature is provided to conserve energy by turning off any unneeded indicator. While the PT controller is in the PowerSave mode, the period (or decimal) of each LED segment (3 periods total) comes on one at a time (from left to right, then right to left). The rest of the PT display and its four relevant LED indicators are off to conserve energy. During the day—while charging—the charger status LED will still be on during PowerSave; at nighttime—when not charging—the charger status LEDs will be off.

  The controller goes into PowerSave mode if there hasn't been a button press or fault message for a set period of time, depending on the setting (*15 Min* is the default setting). Whenever the controller goes into PowerSave mode, the display and its relevant LEDs can be reactivated by pressing any pushbutton.

  If the PT Aux Relay is energized, the AUX LED remains on during PowerSave mode. If a fault occurs during PowerSave, the display and Fault LED come on and stay on as long as the fault is active.

  Note: *If more than one PT controller is connected in your system, you can view/edit the data for each individual controller. See Figure 12-8 for instructions on navigating this menu.*

  Default setting: *15 Min*

  Range: *OFF, 1-60 Min (1-min increments)*

12.2 Operating/Monitoring the PT Controller using the ME-ARTR

This section provides the PT menus under the ME-ARTR's CTRL and METER buttons that determine how to control and operate the charge controller.

12.2.1 Operating the PT Charge Controller

The charge mode is automatically activated and begins when acceptable PV power is connected to the PV input of the controller. When the controller is actively charging, the display may show: *Bulk Charging*, *Absorb Charging*, *Float Charging*, or *Equalizing*.

CTRL: 05A PT Chg Ctrl

Generally, the *PT Control* menu is left in the *Multi-Stage* selection. To change this selection, press the CTRL button and rotate the SELECT knob to the *05 PT Control* menu, and then press the SELECT knob to enter this menu.

Default setting: *Multi-Stage*

Range: *Multi-Stage, Charger Off, Start Float, Start Bulk, Start EQ (5sec)*

- **Multi-Stage** – This charge profile causes the charger to automatically operate through the multi-stage (Bulk, Absorption, and Float) charge cycles. When PV is connected and charge mode begins[1], the battery voltage is monitored to determine the charging stage. If the battery voltage is low, the charger begins Bulk charging. If the DC voltage is high, the charger skips the Bulk and Absorb charge stages and goes directly to the Float charge stage.

  Info: Unlike the inverter/charger, the PT controller's multi-stage charge profile does not go silent. Once the Bulk and Absorption charge stages are complete, the controller enters the Float charge stage (or, the Constant Current and Constant Voltage modes if battery type CC/CV is selected).

  Note[1] *– When the charge mode begins, if the* 07A Battery Type *selection is* CC/CV *the charger enters Constant Current mode.*

- **Charger Off** – The *Charger Off* selection stops the controller from charging. Even if PV is available on the PV input, the controller is not allowed to charge. To resume charging, select a setting other than "*Charger Off*".

- **Start Float** – This selection restarts the Float charge cycle from any stage in the charge cycle as long as the controller is actively charging.

Info: The *Start Float* selection automatically returns to the *Multi-Stage* setting once the PT controller status displays as "*Float Charging*" on the router.

Info: If battery type *CC/CV* is chosen, the *Start Float* selection transfers the charger to Silent mode (router displays "*Float Charging*")—unless "*Hold CV Chg Volts*" is selected—then, the charger enters Constant Current charge mode (displays "Bulk Charging").

- **Start Bulk** – This selection restarts the Bulk charge cycle from any stage in the charge cycle as long as the controller is actively charging. This setting is useful when an additional charge cycle is required to bring the specific gravity of the batteries to the proper level.

Info: The *Start Bulk* selection automatically returns to *Multi-Stage* once the PT's status displays "*Bulk Charging*".

Info: If battery type *CC/CV* is chosen, the *Start Bulk* selection transfers the charger to Constant Current mode.

Info: If you have to continually restart the bulk cycle in order to fully charge the batteries, check the charge settings from the *SETUP: 07 PT Setup* menu to ensure the batteries are fully charged at the end of a regular multi-stage charge cycle.

CAUTION: Frequently restarting the Bulk charge cycle may result in overcharging of the batteries.

- **Start EQ** – This selection starts the Equalize charge cycle from any stage in the charge cycle as long as the controller is actively charging. To enable the EQ charge cycle, press the SELECT knob for 5 seconds at the "*Start EQ*" display to start a 5-second countdown timer. Once the countdown has finished, the Equalize charge cycle starts and the lower line on the display shows "*EQ STARTED*". After the Equalize charge cycle has started, it will automatically stop after 4 hours; unless "*Custom*" is selected from the *SETUP: 07A Battery Type* menu. In this case, the Equalize charge continues for the duration of the *Set EQ Done Time* setting (default of 4.0 hours). The Equalize charge cycle can also be manually stopped by using the *CTRL: 05 PT Control* menu to allow you to choose a different selection.
  Note: *Depending on the battery type selected in the* 07A Battery Type *menu, "EQ not allowed in this battery type" may appear on the display.*

Info: If the EQ charging time exceeds the *Max Charge Time* setting, "*PT Max Charge Time*" scrolls across the LCD display.

WARNING: Do not perform an Equalization charge without reading and following all safety precautions pertaining to charging/equalization per the battery manufacturer, the inverter owner's manual, and as noted on pages 60-61 in this manual.

CTRL: 05B PT Aux Relay

This menu allows the Aux Relay in each of the PT controllers to be programmed to automatically engage or disengage based on battery voltage, or used to indicate a PT controller fault has occurred. This menu also allows the PT Aux Relay to be manually engaged or disengaged. View the PT Aux Relay's status from the *METER: 07B Aux Relay* menu.
Note: *If more than one PT controller is connected in your system, you will need to adjust this setting for each controller. See Figure 12-4 for instructions on navigating this menu.*

Default setting: DISENGAGED
Range: DISENGAGED, VDC, FAULT, ENGAGED, SOC

Info: When the relay is engaged, the AUX LED on the PT controller display is on (yellow). When the relay is no longer engaged (disengaged), the LED is off.

- **DISENGAGED** – Manually forces the PT Aux Relay contacts to stay disengaged. When the PT Aux Relay is disengaged, the COM to N.O. contact is open, and the COM to N.C. contact is closed. This setting can be used to manually control the device connected to the PT Aux Relay, or can be used to test the PT Aux Relay's operation.
- **ENGAGED** – Manually forces the PT Aux Relay contacts to stay engaged. When the PT Aux Relay is engaged, the COM to N.O. contact is closed, and the COM to N.C. contact is open. This setting can be used to manually control a device connected to the PT Aux Relay, or can be used to test the PT Aux Relay's operation. This setting also allows the PT Aux Relay to stay energized until the *07E PT Relay VDC/Disengage VDC* setting is reached. Normally, under the *VDC* setting, the PT Aux Relay is disengaged until the *Engage VDC* setting is reached.

  However, if *ENGAGE* is selected first, and then *VDC*—if the battery voltage is between the engage and disengaged volt settings after *VDC* is selected—the relay will stay engaged until the *Disengage VDC* setting (and any delay time) is reached.

Info: When the *DISENGAGE* and *ENGAGE* options are selected, the PT Aux Relay activates without any time delay.

- **VDC** – Automatically activates the PT Aux Relay based on adjustable DC voltage settings from the *SETUP: 07E PT Relay VDC* menu. The relay uses the *Engage VDC* and *Disengage VDC* settings to activate based on a low or high DC voltage, and allows the relay to be configured to activate either as an "active high" or "active low" type relay. This relay also uses the *Engage Delay* and *Disengage Delay* settings to automatically control the PT Aux Relay's engage and disengage delay times (refer also to the *SETUP: 07E PT Relay VDC* menu on page 128 for more information on these settings).
- **FAULT** – This setting causes the PT Aux Relay to stay disengaged during normal operation, but engages when a PT controller fault is detected (see Section 12.2.4.3 for a list of PT controller faults). ***Note***: *The PT Aux Relay automatically disengages when the PT fault is cleared.*
- **SOC** – Automatically activates the PT Aux Relay based on adjustable SOC% settings from the *SETUP:07F PT Relay SOC* menu. The relay uses the *Engage SOC* and *Disengage SOC* settings to activate based on a low or high SOC value, and allows the relay to be configured to activate either as an "active high' or "active low" type relay. See page 129 for more information.

CTRL: 05C PT Alarm Ctrl

The alarm inside each PT controller can be programmed to turn on and off based on the battery voltage, or turn on if a PT controller fault has occurred.
Note: *If more than one PT controller is connected in your system, you will need to adjust this setting for each controller. See Figure 12-4 for instructions on navigating this menu.*

Default setting: OFF
Range: OFF, VDC, FAULT, ON

Info: When the *ON*, *OFF*, and *FAULT* settings are selected, the alarm turns on/off without any time delay. The VDC setting has adjustable on and off delay settings.

- **OFF** – Manually forces the alarm to stay off.
- **ON** – Manually forces the alarm to stay on. This setting can also be used to test the alarm's sound and operation.
- **VDC** – Automatically sounds the alarm based on adjustable DC voltage settings from the *SETUP: 07G PT Alarm* menu. The alarm uses the *Alarm ON Volts* and *Alarm OFF Volts* settings to activate based on low or high battery voltage, and allows the alarm to be configured to activate either as an "active high" or "active low" type alarm. This alarm also uses the *Alarm ON Delay* and *Alarm OFF Delay* settings to control the PT alarm's delay times (refer to the *SETUP: 07E PT Relay VDC* menu on page 128 for more information).
- **FAULT** – This setting causes the alarm to stay off during normal operation, but sounds when a PT controller fault is detected (see Section 12.2.4.3 for a list of PT controller faults).

  Note: *The Aux Relay automatically disengages when the PT fault is cleared.*

CTRL: 05D PT MPPT Ctrl

To maximize energy harvest under partially shaded conditions, the PT controller performs an initial sweep of the entire power-voltage characteristic of the array. It does this to ensure the approximated Maximum Power Point (MPP) is detected under partially shaded conditions. After this initial sweep occurs, the sweep frequency (or how often the sweep occurs) can be changed in an attempt to match the environmental conditions—using the following settings.

Note: *If more than one PT controller is connected in your system, you will need to adjust this setting for each controller. See Figure 12-4 for instructions on navigating this menu.*

Default setting: 15 Min Sweep

Range: 5 Min Sweep, 15 Min Sweep, 1 Hour Sweep, Fixed Sweep

Info: Unless there is an unusual environmental event that can change the MMP quickly, such as fast moving clouds, then it is highly suggested that you not change the default setting (15 Min Sweep).

- **5 Min Sweep¹** – After the initial sweep, performs a full sweep every 5 minutes.
- **15 Min Sweep¹** – After the initial sweep, performs a full sweep every 15 minutes.
- **1 Hour Sweep¹** – After the initial sweep, performs a full sweep every 60 minutes.
- **Fixed Sweep** – With this setting, there is no full sweep. At sunrise, the sweep begins and holds at the first peak and then increments around this point until sunset.

Info: The *Fixed Sweep* setting is advantageous if used in areas with normally clear skies and no obstructions on or around the array. However, if there are multiple peaks as the result of partial shading, the controller may not be fixated on the maximum power point.

Note¹ *– In each of these time sweeps, the PT controller continually increments to find the MPP.*

12.2.2 Monitoring the PT Charge Controller

The ME-ARTR router's METER button has additional menus that are helpful for the proper operation and monitoring of your PT controller system.

12.2.2.1 ME-ARTR Router's PT Controller METER Menus

Press the ME-ARTR router's METER button, rotate the SELECT knob to the *07 PT Meters* menu, and then press the SELECT knob to access the *07 PT Meter* read-only menus. Rotate the SELECT knob to view the various PT meters.

METER: 07A PT Status

This read-only menu allows you to view your controller system's PT and power statuses. Press and then rotate the SELECT knob to view the PT and power statuses for each individual connected PT controller.

Info: This menu is used to determine if the PT controller is working correctly and for troubleshooting. Refer to Section 12.3.2.

There are 24 different status/fault messages that can display to identify what state the PT is currently in—only one displays at a time (refer also to Tables 12-2 and 12-4).

PT Status:

- Absorb Charging
- Bulk Charging
- Charger Off
- EQ Charging
- Float Charging
- Sleeping
- UnknownStatus ##

Chg Mode:

- Absorb
- Bulk
- Charger Off
- EQ
- Float
- Unknown Status ##

PT Faults:

- ARC Fault-PT
- BTS Open-PT
- BTS Shorted-PT
- FET Overtemp-PT
- Ground Fault-PT
- HiBatt Temp-PT
- High Bat VDC-PT
- High PV VDC-PT
- Ind Overtemp-PT
- Int Hardware-PT
- Int NTC-PT
- Int Overload-PT
- Int Phase-PT
- Int Power-PT
- Int Pwr Sup-PT
- No PV Input-PT
- Unknown Fault ##

There are eight different PT Power statuses and two PT Relay statuses that can display (refer also to Figure 12-5, and Tables 12-3 and 12-5).

Power Status:

- Limit: Above VDC
- Limit: Int Hz
- Limit: Int Temp
- MPPT On
- No Power Out
- Regulating: Amps
- Regulating: VDC
- Unknown Power ##

PT Relay Status:

- Disengaged
- Engaged

METER: 07B Aux Relay

This read-only menu allows you to view your controller system's aux relay status. Press and then rotate the SELECT knob to view the aux relay status for each individual connected PT controller.

METER: 07C PT Volts

This read-only menu shows your controller system's input voltage from the PV array and the voltage to the controller's battery voltage terminals. Press and then rotate the SELECT knob to view the input from the PV array and voltage to the controller's battery voltage terminals for each individual connected PT controller.

Note: *Normally, this voltage is the same as the battery bank voltage as long as there is no voltage loss in the cables.*

METER: 07D Target Volts

When charging, this read-only menu displays the system's voltage regulation set-point after it has been compensated based on the battery temperature sensor (BTS) reading shown. Press and then rotate the SELECT knob to view the voltage regulation set-point (after BTS compensation) for each individual connected PT controller. The PT controller uses the temperature around the BTS to determine how much the voltage should decrease or increase from the actual voltage regulation setting (i.e., *Absorb Volts*, *Float Volts*, or *EQ Volts* settings). The temperature compensated voltage regulation set-point will be lower than the actual setting if the temperature shown is >77°F/25°C, and will be higher than the actual setting if the temperature shown is <77°F/25°C. This may give the appearance that the batteries are being overcharged when cold and undercharged when hot. However, this voltage change improves the performance of the batteries in cold weather and reduces gassing in hot weather.

Note: *The PT controller temperature compensates the battery charging voltage (i.e., target voltage) down to -4°F/-20°C, but the BTS temperature value displayed on this meter has a low range of 32°F/0°C. Therefore, if the actual BTS temperature is 32°F/0°C or lower, the temperature displayed is held at the low range of 32°F/0°C, but the target voltage displayed on the* 07D Target Volts *meter will be correct.*

Also, the BTS temperature value displayed on this meter is 305°F/152°C if no BTS is detected, and 304°F/151°C if a shorted BTS is detected; in either of these situations (open or shorted BTS), no temperature compensation is applied to the battery charging voltage.

Note: *If using* SETUP: 07A Battery Type: CC/CV*, and* CV Chg Done Time *(or* Amps*) is selected, once the charger finishes the Constant Voltage (CV) charge, the charger goes silent (i.e., not actively charging). After the PT controller goes silent, this menu displays a voltage regulation set-point that is just above the inverter's LBCO level. This voltage regulation set-point allows the PT controller to use as much PV current as possible to ensure the battery voltage—at the inverter's terminals—stays above the inverter's LBCO set-point to prevent the inverter from shutting down.*

Info: The battery temperature reading is from the BTS connected to the networked Magnum inverter. However, if a BTS is not connected to the inverter, then this display uses the temperature readings from the BTS that is connected to the PT controller.

METER: 07E To Batt Now

This read-only menu shows your controller system's real-time current out of the PT controller system to the battery (amps) and the power out of the PT controller system occurring now (in Watts). Press and then rotate the SELECT knob to view the real-time current out of the PT controller to the battery (amps) and the power out of the PT controller occurring now (in Watts) for each individual connected PT controller.

METER: 07F Power to Bat

This read-only menu shows two separate fields to display power out of the PT controller system (press and then rotate the SELECT knob to view/reset power out for each individual connected PT controller):

- **Life:** This display shows the total power out of the controller since it was installed (shown in Megawatt-hours or MWh). To reset this display, access the *Reset* menu, then press and hold the SELECT knob for approximately 5 seconds. Once the *Reset* meter is cleared, return to the *Life* menu, and then press and hold the SELECT knob approximately 10 seconds to clear the *Life* meter. This meter value has a maximum range of 655.36 MWh (.01 MWh resolution).

  Info: The *Life* menu may be reset if the PT controller changes ownership, or if the user purchases a new array and wants to only monitor lifetime power out of the PT controller to the new array.

- **Reset:** This display shows the total power out of the controller since the last time it was reset (shown in Kilowatt-hours or kWH). To reset this display, press and hold the SELECT knob for 5 seconds. This meter value has a maximum range of 6553.6 kWH (0.1 kWH resolution).

METER: 07G Ground Fault

This read-only menu shows the real-time measurement of the controller system's ground fault current. Press and then rotate the SELECT knob to view the ground fault current for each individual connected PT controller.

Note: *This meter can be monitored to give an indication of developing ground faults.*

METER: 07H PT Data

This menu enables you to access the PT Data matrix (see Figure 12-6). The PT Data feature uses the ME-ARTR's internal clock to capture daily PT data events (see the list of data events below). Each separate data capture includes PT data from a designated time period (12:00AM-11:59PM each day). The PT data summary for each time period is displayed in reverse chronological order (i.e., first today's data, then yesterday's data, and so on up to 255 days prior to today). Figure 12-6 also provides an example of how to navigate the PT Data matrix.

Note: *If there is no PT data, then "*No Data Recorded*" displays on the ME-ARTR when you select this menu. PT data is continually updated for the current day (i.e., Today's data).*

Info: Press and hold the SELECT knob for 3 seconds to return to the *07H PT Data* main menu from any screen within the PT Data matrix.

Info: The ME-ARTR's time clock is a critical piece in accurately capturing that day's PT data. Refer to the *SETUP: 01 System Setup/01A Set Clock* menu in Section 3.3.4 for information on setting the router's time clock.

Note: *The ME-ARTR obtains power from the inverter. If the ME-ARTR is disconnected from the inverter, the ME-ARTR's time clock will reset.*

- **Harvest Total** – Displays the total amount of energy in kilowatt hours (shown as kWH) delivered to the batteries. The maximum range is 25.5 kWH (0.1 kWH resolution).
- **Max PV** – Displays the highest voltage received from the PV array and the time of day that it occurred (to nearest 6-minute increment). The voltage shown on the display is averaged each second, and this allows you to check your PV charging system to ensure the PV voltage does not normally exceed the Upper V_{MP} level.
- **Max Bat** – Displays the highest battery voltage since the last reset and the time of day that it occurred (to nearest 6-minute increment). The voltage shown on the display is averaged each second, and is helpful for troubleshooting or detecting an over-charge condition.
- **Min Bat** – Displays the lowest battery voltage since the last reset and the time of day that it occurred (to nearest 6-minute increment). The voltage shown on the display is averaged each second, and is helpful for troubleshooting or detecting an over-discharge condition.
- **On/Work Time** – Displays the number of hours of active production by the PV array (to nearest 6-minute increment).

- **On/Work Time** – Displays the number of hours of active production by the PV array (to nearest 6-minute increment).
- **AH to Batt** – Displays the total amp-hours (AH) delivered from the PT array to the DC system. This display can be used as a battery load indicator to help identify and monitor the battery load consumption. The maximum range is 2,550.0 AH (10.0 AH resolution).
- **Max Pwr** – Displays the maximum power output from the PV array in kilowatts (shown as kW) and the time of day it occurred (to nearest 6-minute increment). The max range is 25.5 kW (.1 kW or 100W resolution).

METER: 07I Clear PT Data History

This read-only menu enables you to delete the PT system's data history displayed in the *METER: 07H PT Data* menu's PT Data matrix. Press and hold the SELECT knob for 5 seconds until "*HISTORY CLEARED*" displays.

Note: *If more than one PT controller is connected in your system, you can clear data history for all controllers or each individual controller. See Figure 12-5 for instructions on navigating this menu.*

Note: *This only clears all previous days' PT data, not today's PT data.*

METER: 07J PT Version

This read-only menu displays the current software version(s) of the connected PT charge controller(s).

Note: "Stacked PT's are different" *appears if you have varied versions of controllers connected. If no PT controllers connected, display shows "- . -".*

METER: 07K PT Active

This read-only menu displays the number of active PT controllers connected to your system (i.e., PTs shown as "C01, C02, C03", etc, depending on many PT controllers you have connected and the particular assigned DIP switch number).

Note: *If only one PT controller connected,* "Not Stacked*" will display.*

Note: *If no PT controllers are connected* <u>*and*</u> "YES*" has been selected from the* TECH: 08 Show All Menus *option, then* "Not Stacked*" will display.*

12.2.2.2 ME-ARTR Router's PT-specific TECH Menus

Press the ME-ARTR's TECH button, and rotate the SELECT knob to access:

TECH: 01 Temperatures (rotate SELECT knob until *PT Temps* displays)

- **01F PT Temps** – Displays the temperature of the attached BTS, and the PT controller's FETs and Inductor.

  PT BTS – Displays the temperature of the Battery Temp Sensor (BTS) that is connected to the PT controller. Refer to info on the *METER: 07D Target Volts* menu on page 134.

  Note: *Shows 305°F/152°C if no BTS is detected, and 304°F/151°C if a shorted BTS is detected. In either situation (open or shorted BTS), there is no temperature compensation applied to the battery charging voltage.*

  PT FETs – Displays the temperature of the PT controller's FETs (Field Effect Transistors).

  PT Inductor – Displays the temperature of the PT controller's internal inductor.

TECH: 04 PT Versions

- **Version: #.#** – Displays the software version of the PT controller connected to the Magnum network (displays "*0.0*" if the PT controller is not communicating on the network).

TECH: 05 Fault History

Press the SELECT knob, rotate the knob to the *PT Faults* option, and then press SELECT.

- **H1A PT Fault History** – This menu displays a history of the last nine PT controller faults. Information for each fault displays from the most recent fault (H1) to the earliest/past recorded faults (H2 up to H9). ***Note:*** *See Section 3.3.5 for procedures on clearing PT fault history data.*

Table 12-1, PT Default Settings on ME-ARTR

Menu Items	Default Settings
Battery Type	Flooded
Absorb Done	Time = 2.0 Hrs, Amps = 20 ADC, SOC = 100%
Max Charge Rate	Rate = 100%, Time = OFF
Bulk Start	Daily/SunUp = YES Volts = 10.0 (12V), 20.0 (24V), 40.0 (48V) SOC = 80%
PT Relay VDC	Engage VDC = 20V, Disengage VDC = 28V Engage Delay = 10 secs, Disengage Delay = 10 secs
PT Relay SOC	Engage SOC = 50% Disengage SOC = 100%
PT Alarm	ON Volts = 10.0 (12V), 20.0 (24V), 40.0 (48V) ON Delay = 10 Sec OFF Volts = 14.0 (12V), 28.0 (24V), 56.0 (48V) OFF Delay = 10 Sec
Power Save PT	Display = 15 Min

12.2.3 PT Charge Controller Menu Maps

Figures 12-4 through 12-8 are a complete overview of the PT settings and information displays available from the ME-ARTR router's CTRL, METER, and SETUP menus. Refer to Appendix A in the back of this manual for a glossary of abbreviations that may appear on the router's LCD display.

Note: *When applicable, battery voltage defaults and ranges are shown for a 12-volt battery (24-volt systems multiply by 2; 48-volt systems multiply by 4).*

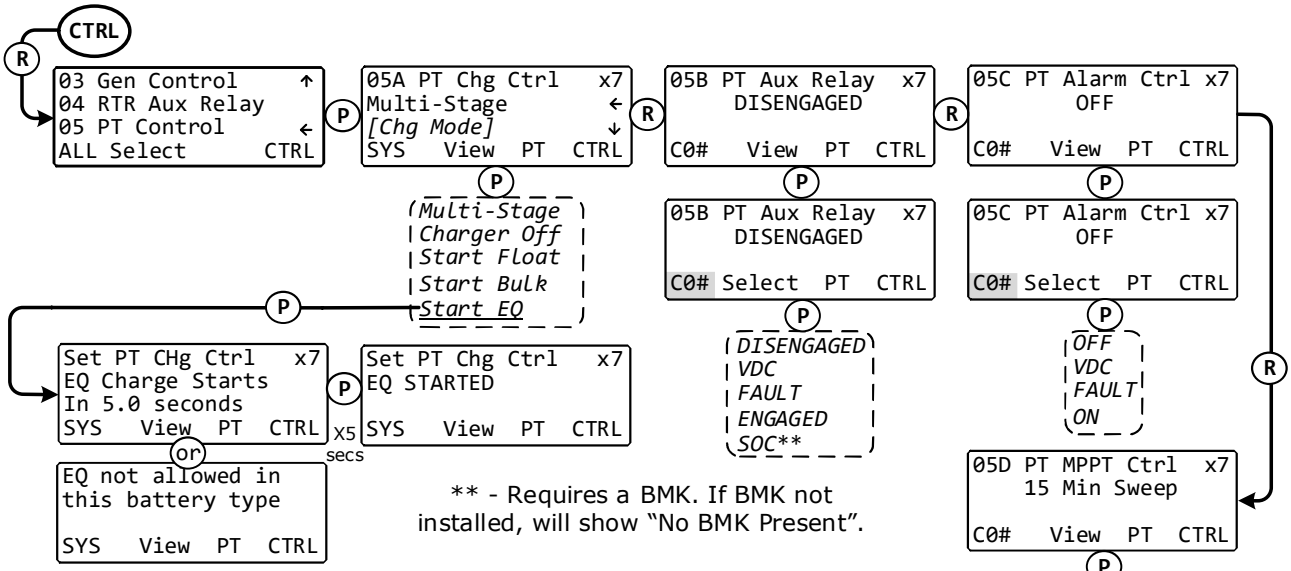

Note: C0# (blinking) = Shows data for the PT controller (per the assigned DIP switch number inside that PT) that appears on the router's display (lower left). Rotate the SELECT knob to view/edit data for any additional connected controller(s). If only one controller connected, "SYS" appears in lower left for 05B, 05C, and 05D menu displays.

Figure 12-4, PT Charge Controller CTRL Menu Map

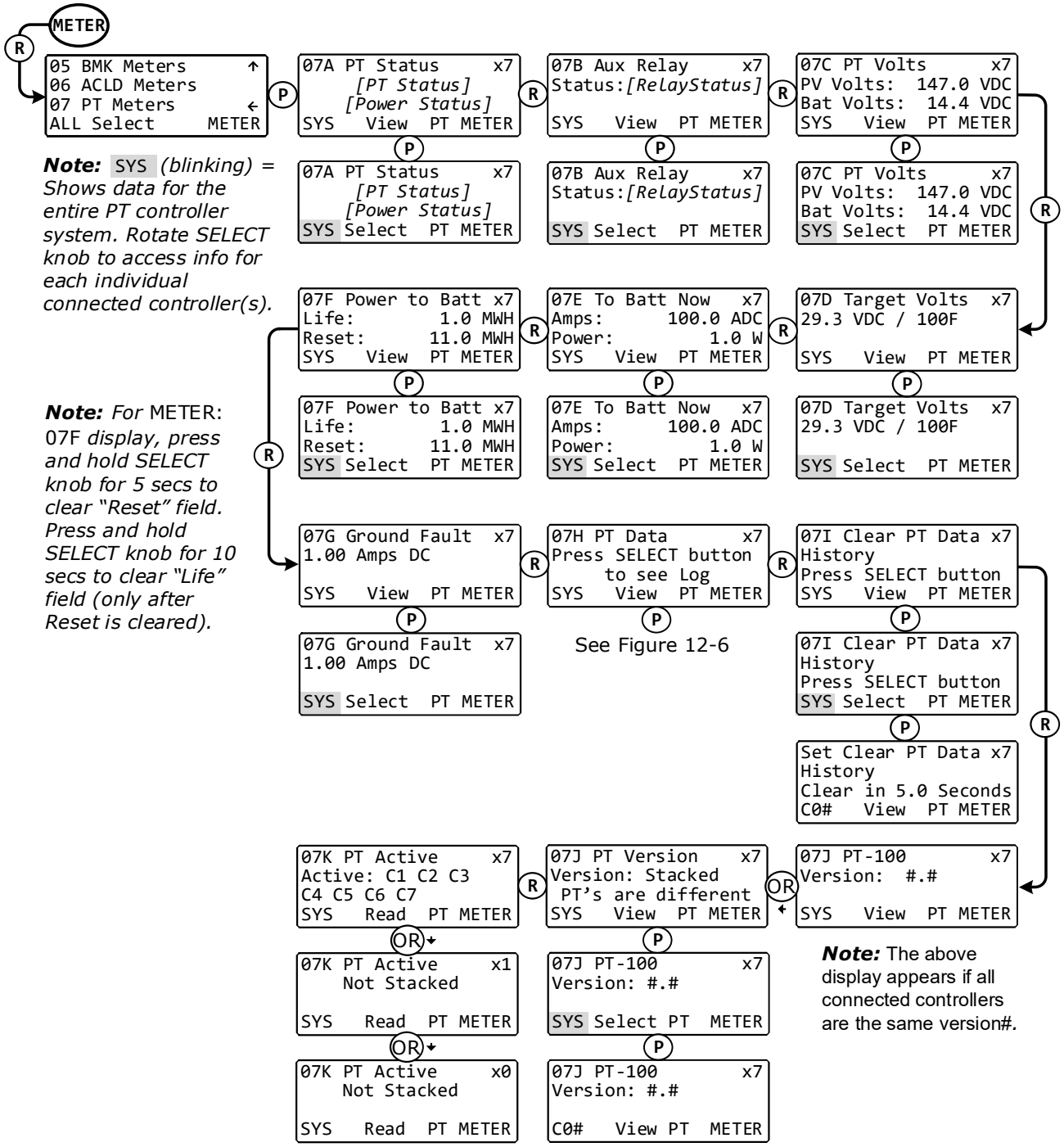

Figure 12-5, PT Charge Controller METER Menu Map

Accessing System PT Data History

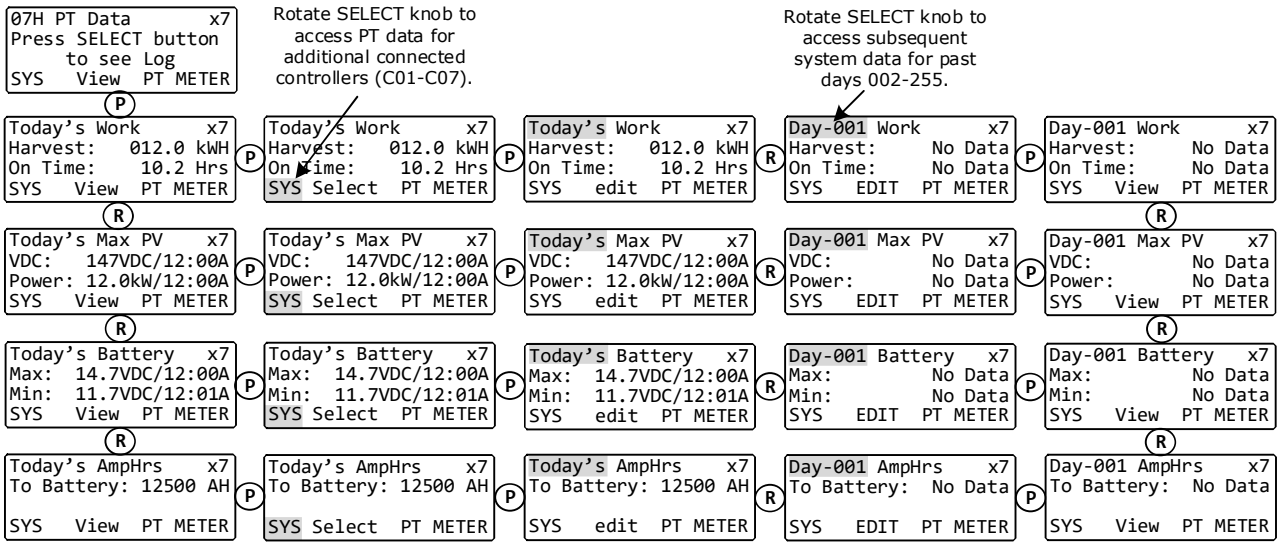

KEY:
Shaded areas denote active fields that you can change by turning the SELECT knob.

(P) = PRESS the SELECT knob

(R) = ROTATE the SELECT knob

Note: Press and hold the METER button at any time when in the PT Data Matrix to return to the *METER: 7H PT Data* menu.

(blinking): Rotate the SELECT knob to access/view data for any additional controllers in your system, or to change the particular field that is blinking on the display.

Accessing Individual PT Data History

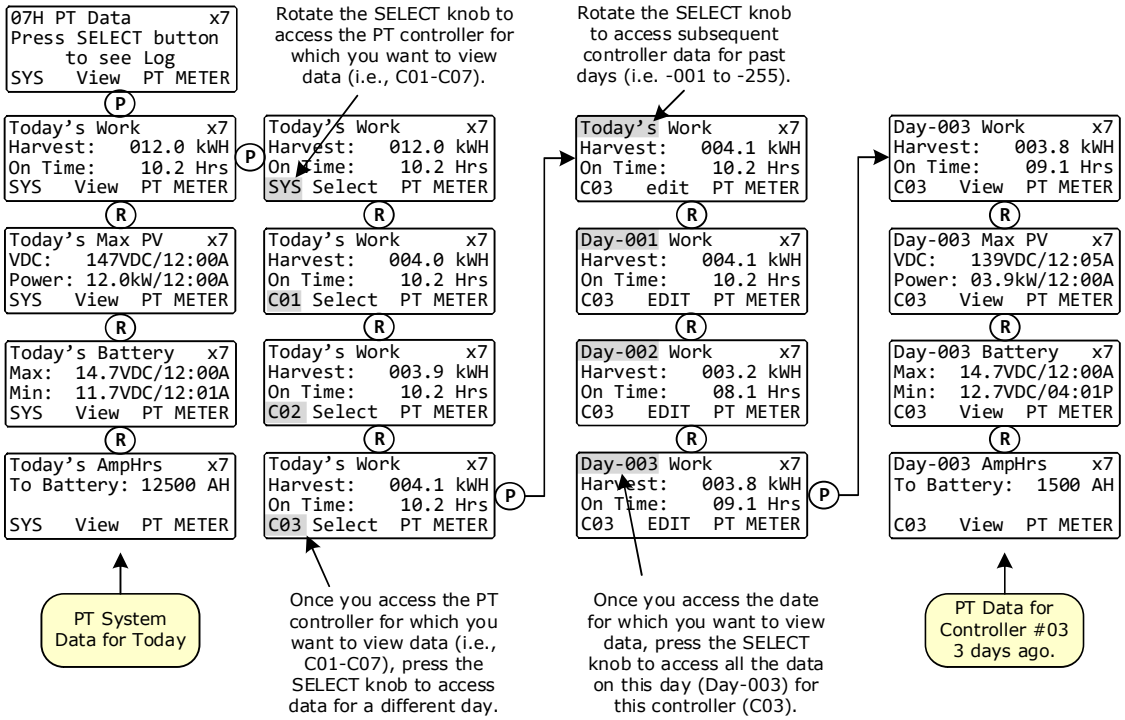

Figure 12-6, PT Charge Controller Data History Matrix Menu Map

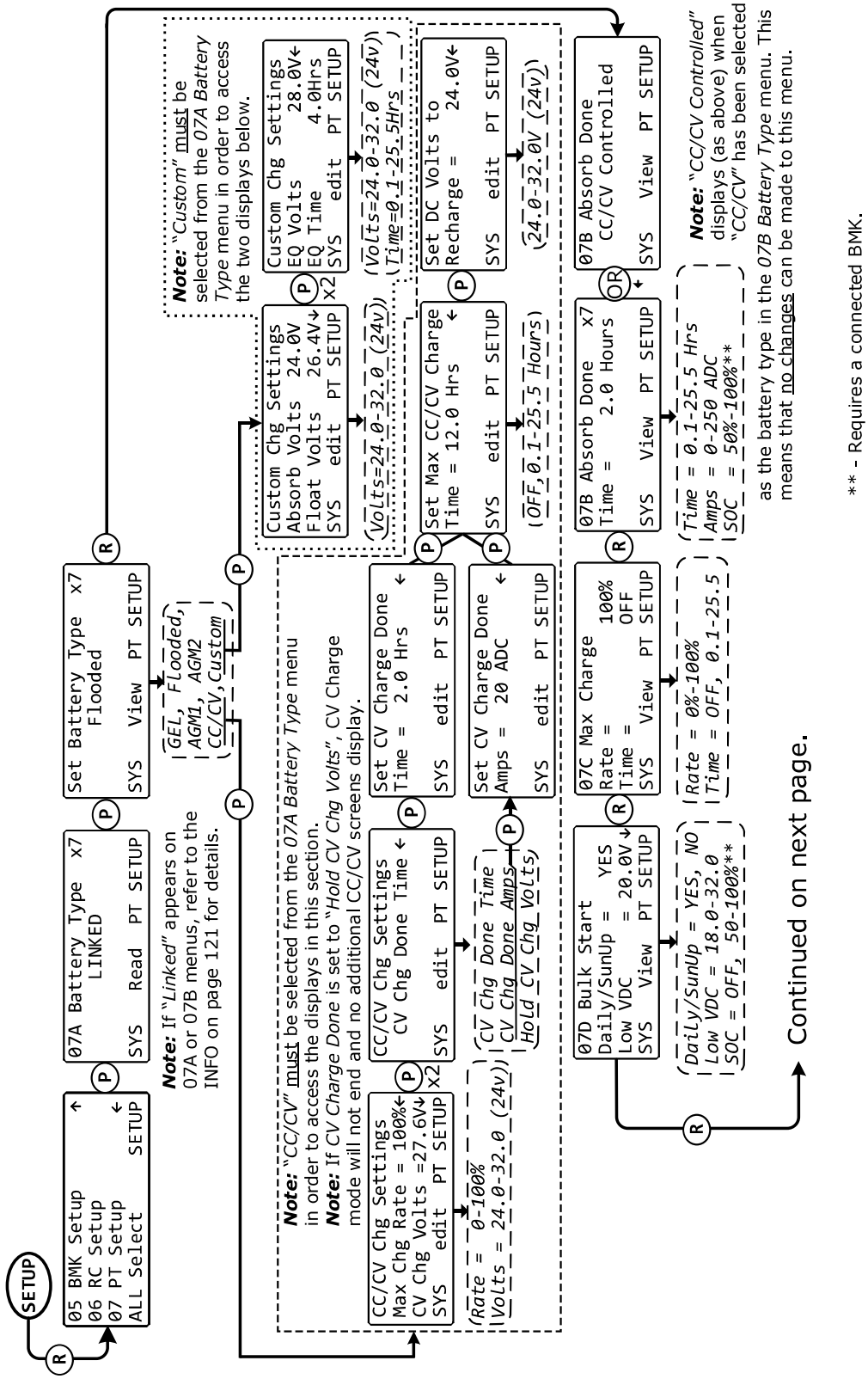

Figure 12-7, PT Charge Controller SETUP1 Menu Map

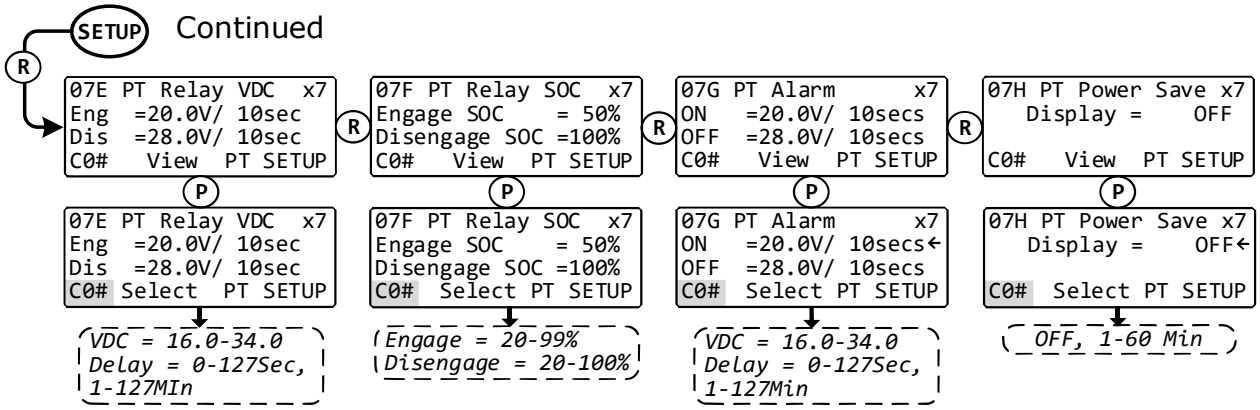

Note: C0# (blinking) = Shows data for the PT controller number (determined by the assigned DIP switch number inside that PT) that appears on the router's display. Rotate the SELECT knob to view/edit data for any additional connected controller(s).

Figure 12-8, PT Charge Controller SETUP2 Menu Map

12.2.4 PT Charge Controller Router Status Messages

A PT status may be an operational, relay, fault, or power status message. The *METER: 07A PT Status* menu displays the PT's current operating status. This menu is important when determining if the PT is working correctly, or for troubleshooting a PT installation.

12.2.4.1 PT Router Operational Statuses

Refer to Table 12-2 below for a brief description of the possible PT charge controller operational statuses that may display (depending on your router).

Table 12-2, PT Controller Router Operational Statuses

Status	Description
Absorb Charging [Absorb]	This charging stage begins after the absorb voltage has been reached. Absorb charging provides the batteries with a constant voltage and reduces the DC charging current to maintain the absorb voltage setting.
Bulk Charging [Bulk]	This is the initial stage of charging. While bulk charging, the charger supplies the battery with controlled constant current. The charger will remain in bulk charge until the absorption charge voltage is achieved.
Charger Off [Chg Off]	Charging in the PT controller has been disabled manually by selecting *Charger Off* from the *04A PT CHG Ctrl* menu, or may be caused by a controller fault.
EQ [EQ]	Battery equalization is in process and the PT controller is trying to maintain the battery at the equalize target voltage.
Float Charging [Float]	The third charging stage occurs at the end of the Absorb charge stage. The charge voltage is reduced to the float charge voltage and kept fully charged—unless the battery type is CC/CV. When the battery type is CC/CV the controller stops charging, but is actively monitoring the battery voltage. If the battery voltage drops to the *Set Recharge Volts* setting, another Constant Current (Bulk)/Constant Voltage (Absorb) charge cycle begins.
Sleeping [Sleeping]	The PV controller is not charging the battery because either the PV has been turned off, or it has determined that there is no sun (i.e., nighttime). ***Note:*** *"No sun" is based on low PV voltage and no effective power (i.e., nighttime).*
Unknown Status ## [UnkS ##]	This status message displays when the inverter/charger has sent a status code that cannot be determined by the ME-ARTR router.

12.2.4.2 PT Router Relay Statuses

The following "Relay" statuses indicate whether the Aux Relay is "engaged" or "disengaged".

Table 12-3, PT Router Relay Statuses

Status	Description
Disengaged	This status indicates that the PT controller is no longer energizing the Aux Relay. When the Aux Relay status shows "*Disengage*", the COM to N.O. contact is open, and the COM to N.C. contact is closed.
Engaged	This status indicates that the PT controller has energized the Aux Relay. When the Aux Relay status shows "*Engage*", the COM to N.O. contact is closed, and the COM to N.C. contact is open.

Info: The Aux Relay can be activated manually; or activated automatically based on battery voltage or if a PT controller fault occurs. Refer to the *CTRL: 04B PT Aux Relay Control* menu to see the selection that is used to activate the Aux Relay.

12.2.4.3 PT Router Fault Statuses

The following "Fault" statuses (Table 12-4) display on the router to indicate that the PT is not operating as intended. Refer to Section 12.3.2 for help in diagnosing/resolving the problem.

Note: *Fault codes (example: "F12") listed below only appear on the PT's LCD display to identify the particular PT fault. These codes do not appear on the ME-ARTR router's LCD display.*

Table 12-4, PT Router Fault Statuses

Status	Description
No PV Input-PT (F01)	The PT controller turned off because there has been no source of PV power detected on the PV terminals (i.e., PV+ to PV-) for >24 hrs.
Int Pwr Sup-PT (F02)	The PT controller turned off because the voltage from the auxiliary power supply in the controller has dropped to a low level.
High PV VDC-PT (F03)	The PT controller turned off because a very high PV voltage (>187 VDC) has been detected on the PV terminals (i.e., PV+ to PV-).
High Bat VDC-PT (F04)	The PT controller turned off due to instantaneous high voltage (≥68 VDC) detected on the battery terminals (i.e., BAT+ to BAT-).
BTS Shorted-PT (F05)	The PT controller continues to run, but a problem with the BTS has been detected (temp sensor has shorted). When this happens, the temp-compensation is fixed at a temperature of 77°F/25°C.
FET Overtemp-PT (F06)	The PT controller turned off because the internal FETs (Field Effect Transistors) have exceeded their safe operating temperature (≥185°F/85°C).
HiBatt Temp-PT (F07)	The PT controller turned off because the BTS has reached a very high temperature (≥131°F/55°C).
Int Overload-PT (F08)	The PT controller turned off because the current to an internal sensor has exceeded the controller's protection limits.
Int Phase-PT (F09)	The PT controller turned off because one of the internal phases is faulty or the phase signals are not in sync with each other.
BTS Open-PT (F10)	The PT controller continues to run, but the BTS has opened or is no longer connected. When this happens, the temp-compensation is fixed at a temperature of 77°F/25°C.
Int Power-PT (F11)	The PT controller turned off because the internal power control circuitry reached its protection limits.
Ground Fault-PT (F12)	The PT controller turned off because the GFP fuse has opened due to a ground-fault condition.
ARC Fault-PT (F13)	The PT controller turned off because a series ARC fault has been detected.
Int NTC-PT (F14)	The PT controller turned off because the internal NTC (Negative Temperature Coefficient) temperature sensor suddenly caused a large, unexpected temperature change.
Int Hardware-PT (F15)	The PT controller turned off because a redundant hardware protection circuit that monitors the internal temperature has exceeded a safe operating limit.
Ind Overtemp-PT (F16)	The PT controller turned off because the charger's inductors have exceeded their safe operating temperature (≥270°F/32°C).
USB Fault-PT (F17)	This fault indicates that the PT's USB port is plugged into a computer as the unit is attempting to convert power. ***Note:*** *This fault typically occurs when a software update is performed and the USB cable hasn't been unplugged.*

Table 12-4, PT Router Fault Statuses (Cont.)

Status	Description
No Stack Comm-PT (F20)	The PT controller will not run because stacking has been enabled (DIP switch 10 is set to UP), but the controller is not receiving any network communications from the Magnum inverter.
Stack ComLost-PT (F21)	The controller was previously communicating on the network, but now it is no longer receiving any communications from the Magnum inverter or from another controller. ***Note:*** *The controller continues to run with this fault*.
Stack Switch-PT (F22)	The PT controller is not able to run because the controller's stacking address has been incorrectly set.
Battery Volts-PT (F23)	This fault indicates that there is a large battery voltage difference between the main controller and a supplemenary controller. This fault is only allowed on a supplementary controller and displays on each supplementary controller that detects a 4% or greater battery voltage difference from the main controller. ***Note:*** *The controller continues to run with this fault.*
Unknown Fault ##	The PT controller turned off because the PT controller has sent a fault code that cannot be determined by the ME-ARTR router.

12.2.4.4 PT Router Charge Modes

The following Charge Modes show the status of the controller's charger.

Table 12-5, PT Router Charge Modes

Status	Description
Absorb	The controller is in the Absorb charge stage, regulating the current from the PV to maintain the battery at the Absorb target voltage.
Bulk	The controller is in the Bulk charge stage, providing maximum current from the PV to the battery.
Charger Off	Charging in the PT controller has been disabled manually by selecting *Charger Off* from the *04A PT CHG Ctrl* menu, or may be caused by a controller fault.
EQ	The controller is in the Equalization charge mode, regulating the current from the PV to maintain the battery at the Equalize target voltage.
Float	The controller is in the Float charge stage, regulating the current from the PV to maintain the battery at the Absorb target voltage.
Unknown Status ##	This status message displays when the inverter/charger has sent a status code that cannot be determined by the ME-ARTR router.

12.2.4.5 PT Router Power Statuses

The following "Power" statuses show the status of the controller's Power Point Tracking.

Note: *The power status codes (example: "P04") listed below only appear on the PT's display to identify the particular PT power status.*

Table 12-6, PT Router Power Statuses

Status	Description
MPPT On (Pon)	**Power Maximized (MPPT is On)** – The MPPT circuit is delivering the maximum power from the array to the battery.
Regulating: VDC **[Reg: VDC]** (P01)	**Battery Voltage Regulation (Normal Current Regulation)** – The PT controller is regulating the current to the batteries to keep them at their target voltage in the Absorb, Float or Equalization stage.
Regulating: Amps **[Reg: Amps]** (P02)	**Battery Current Regulation (Normal Current Regulation)** – The PT controller is regulating the current to the battery to ensure the controller's maximum output current is not exceeded.
Limit: Int Temp **[Lim: Temp]** (P03)	**Power Limited (Internal High Temperature)** – The temperature inside the PT controller is getting high, so the output current is being limited in an attempt to prevent the controller from shutting down.
Limit: Int Hz **[Lim: Hz]** (P04)	**Power Limited (Internal Frequency)** – The controller includes a variable frequency converter—this power status displays if the output current is being dialed back to prevent the frequency from going either too high or too low. **Info:** If the PV voltage is sized too close to the battery voltage, a *Limit: Int Hz* power status can occur. If this status occurs often, the array may need to be re-configured to increase the PV voltage.
Limit: Above VDC **[Lim: VDC]** (P05)	**Power Limited (Above Voltage Regulation)** – The voltage on the battery bank is above the target voltage set-point. Generally, this is due to an external charger being set to charge at a higher voltage level. The PT controller is limiting the output current in an attempt to prevent the battery voltage from increasing to a voltage level that would trigger a *High Battery In* (F04) fault.
Unknown Power ## **[Unkp ##]** (P##)	This status message (with the hex code number) displays when the ME-ARTR router cannot determine the power status code that was received.

12.3 PT Controller Troubleshooting using the ME-ARTR

This section assists in using your router to identify a fault, and to resolve an abnormal operational condition detected within your AGS system.

12.3.1 PT Controller Fault Message Screens

When a PT fault is detected, the ME-ARTR's red FAULT LED lights and the fault status is displayed on the LCD screen (see Figure 12-9 example). Use the router's LCD screen and the information in this section to identify and correct the issue.

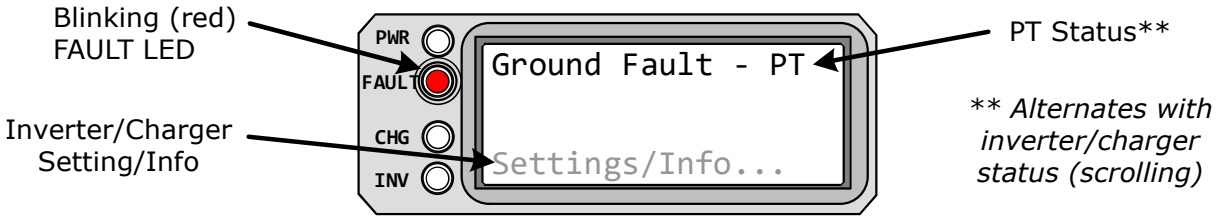

Figure 12-9, PT Controller Fault Message (Example)

12.3.2 Resolving PT Faults using the ME-ARTR

For each PT fault (listed alphabetically), refer to their respective remedy.

- **ARC Fault-PT** – A series ARC fault has been detected on the PV input side of the PT. The PT turned off to reduce current flow in an attempt to extinguish the DC arc in the PV system.

  Remedy: A breakdown in the wiring or in an electrical connector has the potential for producing a DC ARC fault. Look for any loose or intermittent connection, or a defective component (i.e., connectors, cables, PV controllers, or junction box) in the PV circuit.

  Note: *When the cause of the ARC fault has been corrected, manually clear this fault by pressing the PT controller's RESET pushbutton for one second.*

  Info: The PT controller contains an ARC fault test button to verify the operation of the ARC fault detection/indication circuit. See the PT owner's manual for more information on the ARC fault test button.

  Info: The ARC fault circuit is normally enabled. However, if an external system ARC fault detection/indicator is installed, the ARC fault detection circuit inside the PT can be disabled. See the PT owner's manual for information on disabling the ARC fault circuit.

- **Battery Voltage Fault** – This fault indicates that there is a large battery voltage difference between the main controller and a supplementary controller. This fault is only allowed on a supplementary controller and displays on each supplementary controller that detects a 4% or greater battery voltage difference from the main controller.

  Note: *The controller continues to run with this fault.*

  Remedy: This fault can be caused by an open breaker to the BAT+ input, a bad wire connection, or having a large voltage drop (due to using wire that is too small for the distance and current) to the BAT input terminals on the supplementary PT controller.

  The fault will automatically clear and the controller will resume operation once the voltage to the BAT input terminals (on the supplementary controller) is within 4% of the main controller's battery voltage.

- **BTS Open-PT** – The BTS has opened or is no longer connected. This fault causes the BTS to show *305°F/152°C* on the *TECH: 01F PT Temps* display. With a defective or disconnected BTS, there is no temperature compensation applied to the battery charging voltage.

  Remedy: Normally when a BTS is connected, it communicates temperature information to the PT controller. This fault occurs when the PT controller is no longer receiving this information, which can occur if the BTS cable becomes disconnected or damaged. See if the BTS cable has fallen out of the BTS port on the PT controller. If still connected, check for any damage to the BTS cable.

  Note: *The fault will automatically clear once a good BTS is reconnected. If the BTS is determined to be faulty, this fault can be cleared manually by removing the faulty BTS and pressing the PT controller's RESET pushbutton for one second.*

- **BTS Shorted-PT** – A shorted BTS has been detected. This fault causes the BTS temperature to show *304°F/151°C* on the *TECH: 01F PT Temps* display. With a defective BTS, there is no temperature compensation applied to the battery charging voltage.

  Remedy: This can be caused by a shorted BTS cable or debris within the BTS RJ11 terminal. Either remove or replace the BTS (and cable), check the BTS connector to ensure there are no shorted pins, or check inside the BTS RJ11 terminal for debris.

  Note: *If caused by a faulty BTS, the fault automatically clears once the BTS is removed.*

- **FET Overtemp-PT** – The internal FETs (Field Effect Transistors) have exceeded their safe temperature operating range (≥*185°F/*85°C).

  Remedy: If this fault happens often, ensure the controller is not in a hot area, has proper ventilation, and the cooling fans inside are working.

  Note: *This fault automatically clears and the unit resumes operation when the FET temperature has cooled down to 181°F/83°C or below. Manually clear by pressing the PT's RESET pushbutton for one second once the FET temperature falls below 185°F/85°C.*

- **Ground Fault-PT** – The PT controller turned off because the GFP fuse inside the PT has opened due to a ground-fault condition.

  WARNING: Conductors that were normally grounded may have become ungrounded and energized if a ground fault is indicated.

  Remedy: Find and correct the ground-fault condition and replace the GFP fuse. Once the ground-fault condition is corrected and the GFP fuse is replaced, manually clear this fault by pressing the PT controller's RESET pushbutton for one second.

  Info: See the PT owner's manual for the GFP fuse location and type.

- **HiBatt Temp-PT** – The temperature around the BTS has risen to 131°F/55°C or above.

  Remedy: Check the area where the BTS is located. Ensure that the BTS hasn't been placed in a hot area or near a hot device. If the BTS was placed on a battery ensure the batteries are not overheated. If neither of these are the issue, then remove the BTS from the BTS port. If the fault clears, replace the BTS. If the fault continues, then inspect the BTS port for cleanliness and/or have the controller serviced.

  Note: *This fault automatically clears and the unit resumes operation when the BTS temperature has cooled down to 122°F/50°C or below. Manually clear by pressing the PT's RESET pushbutton for one second once the BTS temperature falls below 129°F/54°C.*

- **High Bat VDC-PT** – High voltage (≥68 VDC) has been detected on the battery input terminals (i.e., BAT+ to BAT-).

Remedy: Check the voltage on the battery terminals. High voltage can be caused by an incorrect connection of the PV array to the battery terminals, or the battery bank being charged by an external means and the voltage is >68 VDC (including ripple voltage).

Note: *The fault automatically clears and the unit resumes operation once the voltage to the battery input terminals is ≤66.4 VDC. Manually clear the fault by pressing the PT controller's RESET pushbutton for one second when the voltage falls below 68 VDC.*

CAUTION: The PT controller can be damaged if the voltage to the battery input terminals is above 68 VDC.

- **High PV VDC-PT** – A very high PV voltage (>187 VDC) has been detected on the PV terminals (i.e., PV+ to PV-).

Remedy: Check if the sizing of the PV array voltage is too high or too close to the maximum PT input operating voltage during cold weather periods. To prevent this fault and keep the controller running, size the PV array to ensure the PV input voltage stays below 187 VDC under any weather condition.

Note: *The fault automatically clears and the unit resumes operation once the voltage to the PV input terminals is less than 187 VDC.*

CAUTION: The PT controller can be damaged if the voltage to the PV input terminals is more than 200 VDC above the battery voltage or greater than the 240 VDC maximum, whichever is less.

- **Ind Overtemp-PT** – The PT controller turned off because the internal inductors have exceeded their safe operating temperature (≥270°F/132°C).

Remedy: If this fault frequently occurs, ensure the controller is not in a hot area, has proper ventilation, and the cooling fans inside are working.

Note: *This fault automatically clears and the unit resumes operation when the IND temperature has cooled down below 261°F/127°C. Manually clear by pressing the PT's RESET pushbutton for one second once the FET temperature falls below 270°F/132°C.*

- **Int Hardware-PT** – The redundant hardware protection circuit that monitors the internal temperature has exceeded a safe operating limit.

Remedy: When a fault condition occurs, the PT controller shuts down to protect itself. Press and hold the PT's RESET pushbutton for 10 seconds to turn the controller on and to verify the fault has cleared. If the fault remains, the controller will require repair.

- **Int NTC-PT** – The internal NTC (Negative Temperature Coefficient) temperature sensor detected a large, unexpected temp change.

Remedy: When this fault condition occurs, the PT controller shuts down to help protect itself. Press and hold the PT's RESET pushbutton for 10 seconds to turn the controller on and to verify the fault has cleared. If the fault remains, the controller will require repair.

- **Int Overload-PT** – The current to an internal sensor has exceeded the PT's protection limits.

Remedy: When this fault condition occurs, the PT controller shuts down to help protect itself. Press the PT's RESET pushbutton for one second to turn the controller on and to verify the fault has cleared. If the fault remains, the inverter will require repair.

- **Int Phase-PT** – The internal phases is faulty or the phase signals are not in sync with each other.

Remedy: When this fault condition occurs, the controller shuts down to help protect itself. Press the PT's RESET pushbutton for one second to turn the controller on and to verify the fault has cleared. If the fault remains, the controller requires repair.

- **Int Power-PT** – The internal power control circuity reached its protection limits.

  Remedy: When this fault condition occurs, the controller shuts down to help protect itself. Press the RESET pushbutton for one second to turn the controller on and to verify the fault has cleared. If the fault remains, the controller will require repair.

- **Int Pwr Sup-PT** – The voltage from the auxiliary power supply in the controller has dropped to a low level.

  Remedy: Check for a loading of the power circuit on the PT controller's NETWORK or STACK port. This happens if an accessory cable that is plugged into the PT controller has shorted, or an accessory—that should be powered externally—is plugged into the PT controller and is attempting to be powered from one of the PT's ports.

  Remove any cable plugged into the NETWORK (or STACK) port and also check these two ports for debris, then clear the fault by pressing the PT's RESET pushbutton for one second. If the fault continues—after removing all cables, checking the ports for cleanliness and pressing the RESET button—the controller requires service.

- **No PV Input-PT** – No source of PV has been power detected on the PV input terminals (i.e., PV+ to PV-) for more than 24 hours.

  Remedy: Check for an open breaker to the PV input, a bad PV wire connection to the PV terminals on the PT controller, or a long period (>24 hours) of no sun or very low sun.

  Note: *The fault automatically clears and the unit resumes operation once the voltage to the PV terminals is >5 volts above the battery voltage.*

- **No Stack Comm-PT** – The PT controller will not run because stacking has been enabled (DIP switch 10 is set to UP), but the controller is not receiving any network communications from the Magnum inverter.

  Remedy: This fault can be caused by:

  1. Stacking mode was inadvertently/incorrectly enabled (DIP switch 10 set UP).
     a) Disable stacking (if it is not needed) by setting DIP switch 10 to DOWN.
  2. An open, incorrect or disconnected network cable.
     a) Examine the network cable for any damage, and replace if needed.
     b) Ensure the correct network cable is used.
     c) Ensure the network cable is connected to the inverter's and controller's NETWORK port. Listen and make sure you hear an audible "click" when inserting the connector into the networks ports.
     d) Inspect both ends of each cable to ensure they are clean and not damaged; also inspect the ports to ensure there is no debris or damage.
     e) Try another network cable.
  3. The inverter is not powered, or its NETWORK communication port is faulty.
     a) Ensure the inverter has power and is able to turn on and off.
     b) If the router is powered and communicating, then the remote port is working; in this case, remove the network cable from the NETWORK port and connect it to the inverter's REMOTE port to see if it now starts communicating.

  The fault will automatically clear and the controller will begin operation once the controller is able to communicate on the network.

- **Stack ComLost-PT** – The controller was previously communicating on the network, but now it is no longer receiving any communications from the Magnum inverter or from another controller. ***Note:*** *The controller continues to run with this fault.*

  Remedy: This fault can be caused by:

  1. A stack or network cable was damaged or disconnected.
     a) Examine the cables for any damage and replace if needed, or try another remote and/or stack cable.
  2. The network or stack cable has been disconnected or the connection is now bad.
     a) Inspect both ends of each network or stack cable to ensure they are clean and not damaged; also, inspect the inverter's and controller's NETWORK ports and the controller's stack ports to ensure there is no debris or damage.
  3. The inverter is no longer powered or it's communication port is faulty.
     a) Ensure the inverter has power and is able to turn on and off.
     b) If the router is powered and communicating, then the remote port is working; in this case, remove the network cable from the NETWORK port and connect it to the inverter's REMOTE port to see if it now starts communicating.

  The fault will automatically clear and the controller will resume operation once it receives communications from the network (or from another controller).

  This fault can also be manually cleared by pressing the RESET button on the front of the PT controller for a minimum of two seconds.

  Info: Even though network communications has stopped, all network settings in the controller remain until disconnected from both PV and battery power.

- **Stack Switch Fault** – The PT controller is not able to run because the controller's stacking address has been incorrectly set.

  Remedy:

  1. Ensure the stacking address is not set to "*C00*".
     a) C00 is an invalid stacking address, examine DIP switches 7, 8, and 9 to ensure that only C01-C07 is set as the stacking address.
  2. Ensure none of the stacked controllers have the same stack address.
     a) Each controller must have its own unique stack address. Examine DIP switches 7, 8, and 9 to ensure each controller address is different—and not set to C00.
  3. If stacking cables have been connected between controllers, ensure stack mode (DIP switch 10 set UP) has been enabled.
     a) Set DIP switch 10 to the UP position (stack enabled) on every controller connected together in a stacked configuration.

  The fault will automatically clear and the controller will resume operation once the correct stack address is set.

- **USB Fault** – This fault indicates that the USB port on the PT is plugged into a computer as the unit is attempting to convert power. ***Note:*** *This fault typically occurs when a software update is performed and the USB cable hasn't been unplugged.*

  Remedy: Ensure nothing is connected to the USB port on the PT-100, then press and hold the RESET pushbutton for one second. This should clear the fault and turn the controller on.

- **Unknown Fault ##** – The PT controller has sent a fault code that cannot be determined by the router.

  Remedy: Contact DMX Power Technical Support (800-553-6418) for assistance in identifying the actual fault condition.

Appendix A – Router Display Abbreviations

Use the table below to identify the abbreviations that may appear on your router's LCD display.

Table A-1, Abbreviations on Router Display

SHORT ABBREV. (8 char.)	MINI ABBREV. (4 char.)	FULL NAME (*DEVICE*)
NA	NA	Absorb (*PT*)
Absorb	NA	Absorb Charging
NA	NA	Absorb Charging (*PT*)
Acc	NA	Accessory
AC In	ACIn	AC In (*AGS*)
ACLD	NA	AC Load Diversion (*ACLD*)
AC OverL	NA	AC Overload
ActAbsb	AAbs	Active - Absorb (*ACLD*)
ActBulk	ABuk	Active - Bulk (*ACLD*)
ActFlt	AFlt	Active - Float (*ACLD*)
AGM	NA	Absorbed Glass Mats
AGS	NA	Automatic Generator Start
NA	NA	ARC Fault (*PT*)
Backfeed	NA	AC Backfeed
BM or BMK	NA	Battery Monitor Kit
NA	NA	Battery Volts (*PT*)
BMKReady	Redy	BMK Ready (*BMK*)
Brk Trip	NA	Breaker Tripped
BTS Comp	NA	Battery Temp Sensor Comp
NA	NA	Battery Temp Sensor Open (*PT*)
NA	NA	Battery Temp Sensor Shorted (*PT*)
NA	NA	Bulk (*PT*)
Bulk	NA	Bulk Charging
NA	NA	Bulk Charging (*PT*)
BusFault	NA	High Speed Bus
CC/CV	NA	Constant Current/Constant Voltage
CCurrent	NA	Constant Current
Charge	NA	Charging
Chg	NA	Charger
Chg Off	NA	Charger Off (*PT*)
Chg Stby	NA	Charger Standby
Cold	NA	TS Cold (*AGS*)
Cooldown	Cool	Gen Cooldown (*AGS*)
CTRL	NA	Control Button
CVoltage	NA	Constant Voltage
DeadBatt	NA	Dead Battery Charge
DesatFt	DsFt	Desat Fault (*ACLD*)

Router Display Abbreviations (Cont.)

SHORT ABBREV. (8 char.)	MINI ABBREV. (4 char.)	FULL NAME (*DEVICE*)
NA	NA	Disengage (*PT*)
Empty	NA	No Inverter Found
NA	NA	Engage (*PT*)
NA	NA	EQ (*PT*)
EQ	NA	EQ
EQ	EQ	Equalize
NA	NA	EQ Charging (*PT*)
Equalize	NA	Equalizing
ExtInput	NA	External Input (*AGS*)
FacFault	FacF	Factory Fault (*BMK*)
Falt Amp	FAmp	Fault Amp (*AGS*)
Falt Exe	FExe	Fault Exercise (*AGS*)
FaltGnRn	FGnR	Fault Gen Run (*AGS*)
FaltMxRn	FMxR	Fault MaxRn (*AGS*)
Falt SOC	FSOC	Fault SOC (*AGS*)
FaltTemp	FTmp	Fault Temp (*AGS*)
FaltTest	FTst	Fault Test (*AGS*)
Falt TOD	FTOD	Fault Time Daily (*AGS*)
Falt Top	FTop	Fault Topoff (*AGS*)
Falt VDC	FVDC	Fault VDC (*AGS*)
Falt100%	F100	Fault 100% SOC (*AGS*)
Fault##	F##	Unknown Fault ## (*BMK*)
FETOverL	NA	FET Overload
NA	NA	FET Overtemp (*PT*)
FETs	NA	Field Effect Transistors
NA	NA	Float (*PT*)
Float	NA	Float Charging
NA	NA	Float Charging (*PT*)
Full Chg	NA	Full Charge
Gen	NA	Generator (*AGS*)
Gen Off	Off	Gen Off (*AGS*)
GenReady	Redy	Gen Ready (*AGS*)
NA	NA	Ground Fault (*PT*)
HBatTemp	NA	High Batt Temp
HighAmp	HAmp	High Current (*ACLD*)
HighBatt	NA	High Battery
NA	NA	HiBatt Temp (*PT*)
NA	NA	High Bat VDC (*PT*)
NA	NA	High PV VDC (*PT*)
HighVAC	HVAC	High VAC In (*ACLD*)

Router Display Abbreviations (Cont.)

SHORT ABBREV. (8 char.)	MINI ABBREV. (4 char.)	FULL NAME (*DEVICE*)
High VAC	NA	High Volts AC
Hot	NA	TS Hot (*AGS*)
Hrs or HH/Min or MM/Sec	H, M, s	Hours/Minutes/Seconds
Inactive	Inac	Inactive (*ACLD*)
NA	NA	Ind Overtemp (*PT*)
Int Brdg	NA	Internal Bridge
Int Chgr	NA	Internal Charger
NA	NA	Int Hardware (*PT*)
Int NTC	NA	Internal NTC
NA	NA	Int NTC (*PT)*
NA	NA	Int Overload (*PT*)
NA	NA	Int Phase (*PT*)
NA	NA	Int Power (*PT*)
NA	NA	Int Pwr Sup (*PT*)
IntRelay	NA	Internal Relay
Inv	NA	Inverter
Invert	NA	Inverting
Inv Stby	NA	Inverter Standby
Lim: Hz	NA	Limit: Int Hz (*PT*)
Lim: Temp	NA	Limit: Int Temp (*PT*)
Lim: VDC	NA	Limit: Above VDC (*PT*)
Low Batt	NA	Low Battery
LS-AAC	NA	Load Support AAC
LS-VDC	NA	Load Support VDC
Man Run	MnRn	Manual Run (*AGS*)
Mode ##	NA	Unknown Mode ##
MPPT On	NA	MPPT On (*PT*)
No Comm	NCom	No Comm (*ACLD*)
No Comm	NA	No AGS Comm (*AGS*)
No Comm	NA	No Inverter Comm
NoLoad	NLod	No Load (*ACLD*)
NA	NA	No PV Input (*PT*)
No Pwr	NA	No Power Out (*PT*)
NA	NA	No Stack Comm (*PT*)
Off	NA	Off
Open	NA	TS Open (*AGS*)
OutShort	OtSt	Output Short (*ACLD*)
Overcrnt	NA	Overcurrent
Overcrnt	Ovct	Overcurrent (*ACLD*)
Overtemp	Ovtp	Overtemp (*ACLD*)

Router Display Abbreviations (Cont.)

SHORT ABBREV. (8 char.)	MINI ABBREV. (4 char.)	FULL NAME (*DEVICE*)
OverTemp	NA	Overtemp
P1-P6	NA	Port 1-6
P1A	NA	Port# 1 Accessory
PIN	NA	Personal Identification Number
PT	NA	PT-100 Controller
PwrFault	PwrF	Power-up Fault (*BMK*)
QuietTme	QT	Quiet Time (*AGS*)
RC	NA	Remote Control
Reg: Amps	NA	Regulating: Amps (*PT*)
Reg: VDC	NA	Regulating: VDC (*PT*)
Search	NA	Searching
Silent	NA	Silent
Sleeping	NA	Sleeping (*INV* or *PT*)
SOC	NA	State of Charge
SOC: ###%	###%	###% (*BMK*)
NA	NA	Stack ComLost (*PT*)
NA	NA	Stack Switch (*PT*)
StbyAbsb	SAbs	Standby - Absorb (*ACLD*)
StbyBulk	SBuk	Standby - Bulk (*ACLD*)
StbyFlt	SFlt	Standby - Fault (*ACLD*)
StkClock	NA	StackClock Fault
Stk Mode	NA	Stack Mode Fault
StkPhase	NA	StackPhase Fault
StrtAmp	SAmp	Start Amp (*AGS*)
StrtExe	SExe	Start Exercise (*AGS*)
StrtSOC	SSOC	Start SOC (*AGS*)
StrtTemp	STmp	Start Temp (*AGS*)
StrtTest	STst	Start Test (*AGS*)
StrtTOD	STOD	Start Time Daily (*AGS*)
StrtToff	STop	Start Topoff (*AGS*)
StrtVDC	SVDC	Start VDC (*AGS*)
Strt100%	S100	Start 100% SOC (*AGS*)
Stuck Ry	NA	Stuck Relay
Sys	NA	System
Tfmer	NA	Transformer
Tfmr OT	NA	Tfmr Overtemp
Think’n	Thnk	Think’n (*BMK*)
TM	NA	Timers
TS	NA	Temperature Sensor
TS-S	NA	TS Shorted

Router Display Abbreviations (Cont.)

SHORT ABBREV. (8 char.)	MINI ABBREV. (4 char.)	FULL NAME (*DEVICE*)
NA	NA	Unknown ## (*PT*)
NA	NA	Unknown Fault ## (*PT*)
UnkP ##	NA	Unknown Power ## (*PT*)
UnkS ##	NA	Unknown Status ## (*PT*)
Unk?##?	?##?	Unknown ?##? (*AGS*)
NA	NA	USB Fault (*PT*)
Vers	NA	Versions
Warmup	Warm	Gen Warmup (*AGS*)
XOFF	NA	Ext OFF (*AGS*)
XON	NA	Ext ON (*AGS*)
xxC	NA	xxC (*AGS*)
xxxF	NA	xxxF (*AGS*)

Appendix B – Router Feature to Inverter Compatibility

When the ME-ARTR is released with new software, some of the features/functionality may not be available in an inverter or networked accessory with an earlier software level. In this case, the advanced setting is not recognized and will not function. Table B-1 lists the ME-ARTR features/ settings and what inverter compatibility level is required (see the "Model/Level Required" column).

1. Go to: www.dmx-power.com to determine your inverter's compatibility level (L1–L4).
2. Find the features/settings you want to use in Table B-1.
3. An inverter compatibility level ≥ the level required will support the setting/feature.
4. If your inverter does not have the required compatibility level for a feature/setting you want, contact DMX Power for a software upgrade.

Table B-1, ME-ARTR (Version 4.0) Compatibility Matrix

Button	FEATURES/SETTINGS			Model/ Level Required	Default Setting
	Main Menu	Menu Heading/Item	Selections/ Adjustments Range		
CTRL	01 AC In Control		Auto Connect	≥Level 1	Auto Connect
			VDC Connect, Time Connect, AC In-Disabled	≥Level 3 [1]	
			SOC Connect	≥Level 3 [1] [6]	
	02 Charger Control		Multi-Stage, Start Float, Start Bulk	≥Level 4	Multi-Stage
	03 Gen Control		OFF, ON, AUTO	≥Level 1 [7]	OFF**
	04 ARTR Aux Relay		Force Open, Force Closed, Auto VDC, Auto VDC (BTS Comp), Auto Fault, Auto SOC	≥Level 1	Force Open
	05 PT Control	05A PT Chg Ctrl	Multi-Stage, Charger Off, Start Float, Start Bulk, Start EQ	≥Level 4	Multi-Stage
		05B PT Aux Relay	DISENGAGED, VDC, FAULT, ENGAGED, SOC	≥Level 4	DISENGAGED
		05C PT Alarm Ctrl	OFF, VDC, FAULT, ON	≥Level 4	OFF
		05D PT MPPT Ctrl	5 Min Sweep, 15 Min Sweep, 1 Hour Sweep, Fixed Sweep	≥Level 4	15 Min Sweep
METER	01 DC Meters	01A DC Volts to Inv	Read Only display	≥Level 1	Read Only
		01B Inv/Chg DC Amps			
	02 AC Meters	02A AC Output Volts	Read Only display	≥Level 4 [3]	Read Only
		02B AC Output Hz		≥Level 4	
		02C System AC Amps		≥Level 4 [4]	
		02D Inv/Chg Sys Amps		≥Level 4 [4]	
		02E AC Load Amps		≥Level 4 [4]	
		02F AC Input Amps		≥Level 4 [4]	
		02G Inv/Chg AC Amps		≥Level 4 [4]	
		02H Input Volts AC1		MSH Models	
		02I Input Volts AC2		MSH-RE	

Button	FEATURES/SETTINGS			Model/ Level Required	Default Setting
	Main Menu	Menu Heading/Item	Selections/ Adjustments Range		
METER (Cont.)	03 Timers	03A Charge Time	Read Only display	≥Level 1	Read Only
		03B Days Since			
	04 AGS Meters	04A AGS Status	Read Only display	≥Level 1	Read Only
		04B DC Volts to AGS			
		04C Gen Run Time			
		04D AGS Sensor Temp			
		04E Since Run Days			
		04F Since 100% Days			
		04G Gen Hour Meter			
	05 BMK Meters	05A BMK SOC	Read Only display	≥Level 1 [6]	Read Only
		05B DC Volts-BMK			
		05C DC Amps-BMK			
		05D Amp Hours In/Out			
		05E Resettable AHrs			
		05F Total kAHrs Out			
		05G Minimum VDC			
		05H Maximum VDC			
		05I Days Since 100%			
	06 ACLD Meters	06A ACLD Status	Read Only display	≥Level 4	Read Only
		06B Pwr Divert			
		06C ACLD Temperature			
		06D Target VDC			
		06E ACLD-40 Version			
	07 PT Meters	07A PT Status	Read Only display	≥Level 4	Read Only
		07B Aux Relay Status			
		07C PT Volts			
		07D Target Volts			
		07E To Batt Now			
		07F Power to Batt			
		07G Ground Fault			
		07H PT Data			
		07I Clear PT Data Hx			
		07J PT-100 Version			
		07K PT Active			
SETUP	01 System Setup	01A System Clock	Time = 12:00AM-11:59PM	≥Level 1	12:00AM**
			Date = MM/DD/YYYY		
		01B Screen Setup	Contrast = 0-100%		50%**
			Brightness = 0-100%		50%**

Button	FEATURES/SETTINGS			Model/ Level Required	Default Setting
	Main Menu	Menu Heading/Item	Selections/ Adjustments Range		
SETUP (Cont.)	01 System Setup (Cont.)	01C Power Save	PowerSave= OFF, 1-60 min	≥Level 1	15 Min
			Port LEDs = Auto, OFF		Auto
		01D Temp Display	Fahrenheit, Celsius		Fahrenheit
		01E Viewing Ports	Auto Scroll = OFF, 1-60 sec		OFF
		01F ARTR Aux Relay	Open Volts = 8.0-17.0*	≥Level 1	10.0V
			Close Volts = 8.0-17.0*		14.0V
			Open Delay = 0-127 secs, 1-127 mins		10 secs
			Close Delay = 0-127 secs, 1-127 mins		10 secs
		01G ARTR Relay SOC	Open = 20-100%	≥Level 4 [6]	50%
			Close = 20-100%		100%
		01H Max System Charge Amps	Disabled, 20-2500 ADC	≥Level 4	Disabled
		01I Days to remind when to EQ	OFF, 1-255 Days	≥Level 4	OFF
		01J Link PT Charge Settings	YES, NO	≥Level 4	YES
	02 Invert Setup	02A Search Watts	OFF, 5-50 Watts	≥Level 1	5 Watts
		02B LBCO Volts	9.0-12.2* VDC	≥Level 2	10.0 VDC
		02C AC In – Time	Connect=12:00A-11:45P	≥Level 3 [1]	6:00AM
			Disconnect=12:00A-11:45P		6:00PM
		02D AC In – Volts DC	Connect = 9.0-15.9*	≥Level 3 [1]	11.0V
			Disconnect = 9.1-16.0*		14.1V
		02E AC – In SOC	Connect = 20-99%	≥Level 3 [6]	80%
			Disconnect = 21-100%		100%
		02F Inv Always Power-Up When DC Connected	NO, YES	≥Level 1	NO
		02G Inverter Threshold to Start Parallel	OFF, 30%-90%	MS-PAE, MS-PE	60%
	03 Charger Setup	03A AC Input Amps	AC/AC1 Input = 5-60A	≥Level 1 [1]	30A
			AC2 Input = 5-60A	MSH-RE	20A
		03B Low VAC Dropout	AC/AC1 Input = 60-100 VAC, UPS Mode	U.S. Models	80 VAC
			AC2 Input = 60-100 VAC, UPS Mode	MSH-RE Models	70 VAC
			AC Input = 110-190 VAC, UPS Mode	Export models	150 VAC

Button	FEATURES/SETTINGS				Model/ Level Required	Default Setting
	Main Menu	Menu Heading/Item	Selections/ Adjustments Range			
SETUP (Cont.)	03 Charger Setup (Cont.)	03C Battery Type	AGM1, AGM2, Flooded, GEL		≥Level 1	Flooded
			Custom	Absorb = 12.0-16.0V*	≥Level 3 [2]	12.0V
				Float = 12.0-16.0V*		13.2V
				EQ Volts = 12.0-16.0V*		14.0V
				EQ Time = 0.1-25.5Hrs		4.0 Hrs
			CC/CV	Max Chg = 20-990A	≥Level 4	200A
				CV Chg = 12.0-16.0V*		13.8V
				CV Chg Done Time, Amps, Hold Volts		Time
				CV Chg Done Time = 0.1-25.5 Hrs		2.0 Hrs
				CC/CV Max Chg Time = OFF, 0.1-25.5 Hrs		12.0 Hrs
				VDC Recharge = 12.0-16.0V*		12.0V
				CV Chg Done Amps = 0-250ADC		20 ADC
				CC/CV Max Chg Time = OFF, 0.1-25.5 Hrs		12.0 Hrs
				VDC Recharge = 12.0-16.0V*		12.0V
				Hold CV Charge Volts		
		03D Absorb Done	Time, Amps, SOC			Time
			Time = 0.1-25.5 Hrs		≥Level 4 [4]	2.0 Hrs
			Amps = 0-250 ADC		≥Level 4	20 ADC
			SOC = 50-100%		≥Level 4 [6]	100%
		03E Max Charge	Rate = 0-100%		≥Level 3	100%
			Time = OFF, 0.1-25.5 Hrs		≥Level 4	12.0 Hrs
		03F Final Charge Stage	Multi-Stage, Float, Silent			Multi-Stage
			Multi-Stage		≥Level 1	
			Float		≥Level 4	
			Silent	VDC Rebulk = 12.0-16.0*	≥Level 4	12.0V
		03G Always Start Charge in Bulk	Enabled, Disabled		≥Level 4	Disabled
	04 AGS Setup	04A Gen Run DC Volts	OFF, Start Volts= 9.0-15.9*		≥Level 1	11.5V
			Start Delay= 0-127s, 1-127m			120 Secs
			Stop Volts= 9.1-16.0*, Float			14.4V
			Stop Delay= 0-127s, 1-127m			120 Secs
		04B Gen Run Time	OFF, Start = 12:00AM-11:45PM		≥Level 1	OFF
			Stop Daily = 12:00AM-11:45PM			12:00AM

Button	FEATURES/SETTINGS			Model/ Level Required	Default Setting
	Main Menu	Menu Heading/Item	Selections/ Adjustments Range		
SETUP (Cont.)	04 AGS Setup (Cont.)	04C Gen Run AC Amps	Start AC Amps = OFF, 5-60A	≥Level 4	OFF
			Stop AC Amps = 4-59A		4A
			Start Delay = 0-127s, 1-127m		120 sec
			Stop Delay = 0-127s, 1-127m		120 sec
		04D Gen Run SOC	OFF, Start SOC = 20-99%	≥Level 1 [6]	OFF
			Stop SOC = 21-100%		90%
		04E Gen Run Temp	Start = OFF, ExtInput, 65-95F (18-35C)	≥Level 1	OFF
			Time = 0.5-25.5 Hrs		65F/2 Hrs
		04F Max Gen Run Time Autostarted	OFF, 0.1-25.5 Hrs	≥Level 1	12 Hrs
		04G Gen Quiet Time	OFF, Begin = 12:00AM-11:45PM	≥Level 1	OFF
			End Time = 12:00AM-11:45PM		10:00AM
			OFF, Topoff = 30-120 Mins		OFF
		04H Gen Exercise	OFF, Days = 1-255 days	≥Level 1	OFF
			Start Time = 12:00AM-11:45PM		8:00AM
			Run Time = 0.1-25.5 Hrs		1.0 Hrs
		04I Gen No-Load Time	Warm-up = 0-127s, 1-127m	≥Level 1	60 Secs
			Cooldown = 0-127s, 1-127m		
		04J Gen 100% SOC	OFF, Days = 1-255	≥Level 1 [6]	OFF
			Time = 12:00AM-11:45PM		8:00AM
	05 BMK Setup	05A Charge Efficiency	Auto, 50-99%	≥Level 1 [6]	Auto
		05B Battery AH Size	200-2500 AH		400 AH
	06 Remote Control	06A Remote Control	System, Port 1 – Port 6	≥Level 1	System

** – 12-volt values shown; multiply 12-volt values x2 for 24v systems, and x4 for 48v systems.*

*** – These settings return to the factory default setting when power to the router is removed.*

[1] Not available on MM/MM-E/MM-AE/MMS/MMS-E Series models.

[2] AC Couple mode activates when Battery Type = Custom w/ MS-PAE Rev ≥4.1 or MS/MS-PE Rev ≥5.0.

[3] AC output volts only accurate when connected to MS, MS-PAE, MS-PE or MSH Series models.

[4] AC amps displays only appear when connected to MS-PAE, MS-PE, or MSH Series models.

[5] Level 2 and 3 inverters can be used, but: Level 2 inverters are limited from 1 to 4.5 hrs, Level 3 inverters must be <Rev.4.1 and are limited from 1 to 6.5 hrs, Level 3 inverters must be ≥Rev4.1 (& MMS Rev 1.5) and are limited from 1.5 to 6.5 hrs.

[6] BM/SOC features require the ME-BMK (Battery Monitor Kit) to be installed.

[7] ME-AGS-N Rev 5.2 or higher required to manually turn the generator "ON" with the router.

Button	FEATURES/SETTINGS				Model/ Level Required	Default Setting
	Main Menu	Menu Heading/Item	Selections/ Adjustments Range			
SETUP (Cont.)	07 PT Setup	07A Battery Type	AGM1, AGM2, Flooded, GEL		≥Level 1	Flooded
			Custom	Absorb = 12.0-16.0V*	≥Level 3 [2]	12.0V
				Float = 12.0-16.0V*		13.2V
				EQ Volts = 12.0-16.0V*		14.0V
				EQ Time = 0.1-25.5Hrs		4.0 Hrs
			CC/CV	Max Chg = 20-990A	≥Level 4	200A
				CV Chg = 12.0-16.0V*		13.8V
				CV Chg Done Time, Amps, Hold Volts		Time
				CV Chg Done Time = 0.1-25.5 Hrs		2.0 Hrs
				CC/CV Max Chg Time = OFF, 0.1-25.5 Hrs		12.0 Hrs
				VDC Recharge = 12.0-16.0V*		12.0V
				CV Chg Done Amps = 0-250ADC		20 ADC
				CC/CV Max Chg Time = OFF, 0.1-25.5 Hrs		12.0 Hrs
				VDC Recharge = 12.0-16.0V*		12.0V
				Hold CV Charge Volts		
		07B Absorb Done	Time, Amps, SOC			Time
			Time = 0.1-25.5 Hrs		≥Level 4 [4]	2.0 Hrs
			Amps = 0-250 ADC		≥Level 4	20 ADC
			SOC = 50-100%		≥Level 4 [6]	100%
		07C PT Max Charge	Rate = 0-100%		≥Level 3	100%
			Time = OFF, 0.1-25.5 Hrs		≥Level 4	OFF
		07D Bulk Start	Daily/SunUp = YES, NO		≥Level 4	YES
			Low VDC = 9.0-16.0*			10.0V
			SOC = OFF, 50-100%		≥Level 4 [6]	80%
		07E PT Relay VDC	Engage VDC = 8.0-17.0*		≥Level 4	10.0V
			Engage Delay = 0-127s, 1-127m			10 Secs
			Disengage VDC = 8.0-17.0*			14.0V
			Disengage Delay = 0-127s, 1-127m			10 Secs
		07F PT Relay SOC	Engage SOC = 20-100%		≥Level 4 [6]	50%
			Disengage SOC = 20-100%			100%

Button	FEATURES/SETTINGS			Model/ Level Required	Default Setting
	Main Menu	Menu Heading/Item	Selections/ Adjustments Range		
SETUP	07 PT Setup (Cont.)	07G PT Alarm	ON Volts = 8.0-17.0*	≥Level 4	10.0V
			ON Delay = 0-127s, 1-127m		10 Secs
			OFF Volts = 8.0-17.0*		14.0V
			OFF Delay = 0-127s, 1-127m		10 Secs
		07H PT PowerSave	Display = OFF, 1-60 Min	≥Level 4	15 Min
TECH	01 Temps	01A INV BTS Temp	Read Only display	≥Level 4	Read Only
		01B INV Tfmer Temp		≥Level 4	
		01C INV FETs Temp		≥Level 4	
		01D AGS Sensor Temp		≥Level 4	
		01E ACLD Temp		≥Level 4	
		01F PT Temps		≥Level 4	
	02 Port Vers/ARTR = 4.0		Read Only display	≥Level 4	Read Only
	03 AccPort Versions		Read Only display	≥Level 4	Read Only
	04 PT Versions		Read Only display	≥Level 4	Read Only
	05 Fault History	INV Faults	Read Only (rotate SELECT for Hx)	≥Level 4	Read Only
		AGS Faults	Read Only (rotate SELECT for Hx)	≥Level 4	Read Only
		PT Faults	Read Only (rotate SELECT for Hx)	≥Level 4	Read Only
		Clear All Faults	Press SELECT (5 secs) to clear Hx	≥Level 4	Read Only
	06 SETUP PIN		Locked, Unlocked, Change PIN	≥Level 4	Unlocked
	07 Ext Control		YES, ## ## ##, NO	≥Level 4	NO
	08 Show all Menus		YES, NO	≥Level 4	NO
	09 Update Firmware		Press SELECT (5 secs) to load	≥Level 4	
	10 Load All Defaults		Press SELECT (5 secs) to load	≥Level 4	

Appendix C – Using the Router with Non-stacked Inverters

C-1 Using Router to Control Multiple Unconnected Inverters

The router can be used to control multiple Magnum inverters—under certain conditions—that are not connected in parallel (i.e., non-stacked). Each connected inverter must be the same model (i.e., MS4024 and another MS4024), each inverter must be connected to the same battery bank, and because the output of all the inverters are not in-phase with each other, the AC outputs must be isolated from each other.

The behavior of unstacked units are as follows:

- Unstacked units that are inverting:
  1. Pressing the Inverter On/Off button:
     a) If all units are off, turns them all on.
     b) If any unit is on and another one is off, turns them all off.
  2. Units come out of Search mode (if enabled) separately, based on the load sensed by each inverter.
- Unstacked units that are charging:
  1. The lead charger unit is defined as the unit charging and connected to the lowest port number.
  2. All non-lead charger units are forced to the Charge mode of the lead charger.

When using non-stacked units, the router applies the same inverter and charger settings to each inverter. As long as all the inverters are in the same mode either charging or inverting, then the inverters operate together normally. If there is an instance that some inverters connected to the router are charging and others are inverting (such as when an input breaker has tripped), or if the AC is connected to one unit before connecting to another unit (non-synced AC in)—then the features listed below will not work properly.

- System meters (if some units are inverting and others are charging)
- System CHG LED (if lead unit does not have AC in and other units are connected to AC input)
- System Power LED (follows the lead inverter)
- Absorb Done Amps (when some units inverting, others are charging, and there is no BMK installed)
- Absorb Done Time (could get confused and go too long with non-synced AC in)
- Max Charge to battery (when some units inverting and others are charging)
- Batteries may stay in EQ charge longer than desired (can be fooled with non-synced AC in)
- AC In Time/Volts DC/SOC will be inaccurate (when lead unit does not have AC in)
- Remote Monitoring (when some units inverting and others are charging)
- AGS Start on AC Amps (when some units inverting and others are charging)
- AGS Gen Run DC Volts Stop on Float (when lead unit does not have AC in)

Appendix D – Using the ME-ARTR in an AC Coupled Application

This appendix provides information when the router is used in an AC coupled system.

D-1 What is an AC Coupled System

Many homeowners utilize renewable energy (e.g., PV, wind, etc.,) by installing high efficiency, battery-less, grid-tie inverter systems to offset their power consumption from the utility grid. However, during a utility power outage, the grid-tie inverter is required to shut down. This can cause considerable frustration as the homeowner realizes that the critical loads in the home (e.g., refrigerator, lights, water pump, etc.,) are no longer powered, and all the energy produced by the renewable energy source is being wasted while the utility power is out.

In an AC coupled system, all the energy sources and loads are connected directly to the AC side. Installing a bi-directional battery-based inverter (such as Magnum's MS-PAE Series) allows the existing battery-less, grid-tie inverter to continue to operate; and therefore, to continue to utilize the renewable energy to power the home's critical loads during a power outage—all from the AC side. However, in an AC coupled system, during a utility power interruption, the main panel loads are no longer connected and the utility grid is not available to export any excess power that is generated. This means there may be more power on the AC side than the critical loads can consume, causing current to be pushed back thru the output of the MS-PAE Series inverter into the battery bank. Since this is not the normal path to sense incoming current, this inverter is not able to control the current and regulate the battery voltage, providing the possibility that the battery voltage will rise enough to be damaged. To prevent this from happening, the MS-PAE Series inverter includes a "Frequency Shift" feature that can be used to regulate the battery voltage.

D-2 Frequency Shift Feature

The frequency shift feature—when enabled[1]—causes the output frequency of the MS-PAE Series inverter (≥Version 6.0) to change based on the inverter's battery voltage. As the battery voltage begins rising, the output frequency starts decreasing; as the battery voltage returns to its correct voltage level, the frequency increases.

The MS-PAE Series inverter is optimized to work with Magnum Energy's MicroGT500 grid-tie inverter to regulate battery voltage. During a utility power interruption, if the battery voltage begins to rise above the absorb voltage, the output frequency of the MS-PAE Series will start shifting down. The MicroGT500 responds by decreasing its output current to avoid overcharging the battery. As the battery voltage falls, the MS-PAE Series frequency starts shifting back up - allowing the MicroGT500 to gradually provide more current so that the battery can return to its absorb voltage level. The response time on when the frequency continues to shift down or start shifting back up depends on how fast the battery voltage rises or returns to the absorb voltage level.

Note 1: *The Frequency Shift feature is enabled when the battery type is set to Custom, and activates when the battery voltage increases above the absorb voltage setting.*

D-3 Configure the Router to use in an AC Coupled System

The router should be configured to work in an AC coupled system, as described below:

1. Enable the Frequency Shift feature: Select *Custom* under the *03C Battery Type* menu (under *SETUP: 03 Charger Setup*), and then set the *Absorb Volts*, *Float Volts*, and *EQ Volts* per your battery manufacturer's specifications.

   Info: In an AC Coupled system without grid (i.e., Micro Grid), ensure the MS-PAE Series inverter is >Version 6.1 and set the *03D Absorb Done Time menu* (under *SETUP: 03 Charger Setup*) which allows the voltage to transition from the absorb voltage level to the float voltage level—to ensure the batteries are not overcharged.

2. Turn off the Search mode feature: Go to the *02A Search Watts Sensitivity* menu (under *SETUP: 01 Inverter Setup*) and set it to *OFF*.
3. Turn off Parallel Threshold: Go to the *02G Inverter Threshold to Start Parallel* menu (under *SETUP: 01 Inverter Setup*) and set it to *OFF*.
4. Ensure the inverter is set to automatically accept grid power when available: Go to the *01 AC In Control* menu (under *CTRL: 01 AC In Control*) and set to *Auto Connect*.

Index

Symbols

###% 114

A

Absorb/CV Done 20
Absorb Done 16, 20, 26, 29, 34, 37, 38, 40, 59, 60, 83, 85, 92, 106, 117, 119, 121, 125, 126, 127, 163
Absorb Done Amps 38, 40
Absorb Done SOC 29, 38, 40, 92
Absorb Done Time 37, 38, 40
Absorb Volts 36, 119
AC Amps 22
AC Coupled System 164
AC In Control 15, 27
AC In - Disabled 15, 63
AC Input Amps 19, 31, 32
AC Input Volts 22
ACLD-40 Version 117
ACLD Faults
  Desat Fault 120
  High Current Fault 120
  High VAC In Fault 120
  No Load Fault 120
  Output Short Fault 120
  Overcurrent Fault 120
  Overtemp Fault 120
ACLD Meters 20, 117, 120
ACLD Operational Statuses 119
  Active-Absorb 119
  Active-Bulk 119
  Active-Float 119
  Inactive 119
  No Comm 119
  Standby-Absorb 119
  Standby-Bulk 119
  Standby-Float 119
ACLD Power Diverted 117
ACLD Temperature 44, 117, 118
AC Load Amps 19, 85
AC Meters 18, 22
AC Output 22
AC Output Hz 18
AC Output Volts 18
AGS CTRL Menus
  AC In Control 14, 15, 16, 27, 55, 58, 63, 93, 94, 164
  Gen Control 14, 16, 55, 77, 79, 87, 88, 91, 93, 94, 95, 96, 97, 98, 102, 107, 116
AGS Fault Statuses
  Fault 100% SOC 104, 107
  Fault Amp 103, 106
  Fault Exercise 103, 106
  Fault Gen Run 103, 106
  Fault MaxRn 88, 103, 106
  Fault SOC 103, 107
  Fault Temp 104, 107
  Fault Test 104, 107
  Fault Time Daily 104, 107
  Fault Topoff 104
  Fault VDC 104, 107
AGS Menu Maps
  PORT/CTRL/METER/TECH 99
  SETUP 100–101
AGS METER Menus
  AGS Sensor Temp 44, 96
  AGS Status 88, 93, 95, 102
  DC Volts to AGS 82, 96
  Gen Hour Meter 96, 97
  Gen Run Time 23, 83, 84, 85, 86, 87, 88, 92, 94, 96, 103, 107
  Since 100% Days 97, 112
  Since Run Days 90, 97
AGS Meters 20, 93
AGS Operational Statuses
  AC In 14, 15, 16, 23, 27, 28, 29, 55, 58, 63, 65, 93, 94, 102, 163, 164
  Gen Cooldown 91, 96, 102
  Gen Off 93, 102
  Gen Ready 93, 95, 102
  Gen Warm-up 63, 91, 96, 102
  Manual Run 102
  No AGS Comm 102
  Quiet Time 23, 88, 89, 102, 103, 107
  Unknown ?##? 102
AGS Setup 42
AGS SETUP Menus
  Gen 100% SOC Start 86, 92, 93, 97
    Start Gen Days 92

A (Cont.)

Start Time 92
Gen Exercise 23, 90, 91, 103, 106
Run Time 90
Start Gen Days 90
Start Time 90
Gen No-Load Time 91, 102
Cooldown 91
Warm-up 91
Gen Quiet Time 23, 88, 102, 103, 107
Time to Topoff Battery 88–89
Gen Run AC Amps 84, 85, 103, 106
Amps Delay Time 84
Gen Run DC Volts 82, 83, 88, 89, 94, 98
VDC Delay Times 82–83
Gen Run SOC 85, 86, 88, 89, 103, 107
Gen Run Temp 24, 86, 87, 96, 103, 107
Gen Run Time 23, 83, 84, 85, 86, 87, 88, 92, 94, 96, 103, 106
Max Gen Run Time 83, 85, 87, 88, 92, 94, 96, 103, 106
AGS Start Statuses
Start 100% SOC 103
Start Amp 103
Start Exercise 103
Start SOC 85, 86, 103
Start Temp 86, 87, 96, 103, 104, 106
Start Test 103
Start Time Daily 103
Start Topoff 103, 104
Start VDC 94, 103
AGS Statuses
Fault Topoff 104
Always Power-Up 29
ARC Fault 143, 146
Auto Connect 15
Auxiliary (Aux) Relay 2, 11, 16, 17, 24, 25

B

Battery Type 16, 20, 25, 26, 34, 35, 36, 37, 39, 40, 59, 60, 61, 62, 64, 83, 121, 123, 124, 125, 127, 128, 130
AGM1 33
AGM2 33
CC/CV 34
Custom 36
Flooded 33
GEL 33

B (Cont.)

BMK Fault Statuses 114
Factory Fault 114
Power-up Fault 114
Unknown Fault 114
BMK Meters 20, 25, 29, 38, 86
BMK Operational Statuses 114
###% 114
No BMK Present 114
Think'n 114
BMK Setup 43
BTS Temp 43

C

Cables 3, 6, 7, 8, 9, 10, 72, 134, 146, 149, 150
Remote 6
Stack 1
Charger Mode 16, 56, 58
Charger Standby 56
Charger Status Messages 58
Absorb Charging Mode 59
Bulk Charging Mode 59
Charger Standby Mode 59
Charging Mode 59
Constant Current Mode 60
Constant Voltage Mode 60
Equalizing Mode 60
Float Charging Mode 61
Full Charge Mode 61
Load Support AAC Mode 62
Load Support VDC Mode 62
Silent Mode 62
Charge Time 20, 22
Comm LEDs 1
CTRL Button 2, 48
CV Charge Done 34, 35, 123
Amps 34
Hold CV Chg Volts 36
Time 34
CV Chg Volts 34

D

Days Since 22
DC Meters 18, 22
DC Volts to Inv 18, 96
DC Volts to Inverter 22

D (Cont.)

DC Volts to ReBulk 42, 62
DC Volts to Recharge 34, 36, 62
Default Settings
  AGS 104
  Inverter/Charger 47
  PT 137
Disengage Delay 25
Disengage VDC 24

E

Engage Delay 25
Engage VDC 24
EQ 20, 26, 33, 37, 39, 62, 65, 74, 121, 124, 127, 130, 131, 134, 142, 144
EQ Time 37
Equalize Charging 56
EQ Volts 37, 124, 134, 164
Ext Control 47

F

Factory Fault 25, 29, 38, 86, 92, 112, 114, 115, 126, 128, 129
Fault 100% SOC 107
Fault History 23, 44, 45, 69, 136
  AGS 44, 93, 95, 103, 106, 107
  Clear All Faults 44
  INV 44
  PT 44, 136, 146
Faults
  ACLD 120
  BMK 114
  Inverter/Charger 66–73
  PT 146–150
FETs Temp 43
Final Charge Stage 16, 34, 37, 38, 39, 40, 41, 42, 61, 62, 64
  Float 40
  Multi-Stage 40
  Silent 42
Float Volts 36, 119, 123, 124, 134, 164
Front Cover 1, 5, 7, 10
Front Panel
  Aux Relay LED 16, 25, 55
  LCD Display 12, 13, 26, 39, 48, 54, 55, 57, 58, 60, 74, 75, 99, 112, 115, 118, 127, 131, 137, 143, 151

F (Cont.)

Front Panel (Cont.)
  LED Indicators 54, 63, 130
  Menu buttons
    CTRL 2, 14, 16, 55, 79, 93, 94, 95, 98, 116, 130
    METER 12, 18, 22, 24, 44, 55, 75, 81, 82, 84, 85, 86, 88, 93, 95, 96, 99, 108, 110, 117, 118, 133
    PORT 13, 24, 42, 44, 55, 81, 93, 108
    SETUP 2, 13, 14, 15, 23, 24, 29, 34, 39, 42, 46, 58, 59, 60, 64, 81, 93, 94, 97, 109, 116, 117, 121
    TECH 23, 24, 43, 44, 46, 118, 136
  ON/OFF button 77
  Rotary SELECT Knob 1, 12, 55

G

Gen Control 14, 16, 93
Gen Run Time 103

I

Input Volts 20
Internal Fault Messages 73
  Internal Bridge Fault 73
  Internal Charger Fault 73
  Internal NTC Fault 73
  Internal Relay Fault 73
Inv/Chg AC Amps 19
Inv/Chg Amps 22
Inv/Chg DC Amps 18, 22, 25, 35, 38, 62
Inv/Chg Sys Amps 19
Inverter Always Power-Up 29
Inverter Compatibility 156–162
Inverter Reset 55, 66, 68, 70, 72, 73, 77
Inverter Standby 56
Inverter Status Messages 57
  Empty 57
  Inverter Standby Mode 58
  Inverting Mode 57
  Off Mode 58
  Searching Mode 58
  Unknown Mode ## 58
Inverter Threshold 30, 164
INV Temperatures 24, 43, 44, 68

L

LCD Display 1, 6, 12, 13, 15, 39, 48, 54, 55, 57, 58, 60, 74, 75, 99, 112, 115, 118, 127, 131, 137, 143, 151
LED Indicators 54, 63, 130
Link PT Charge 26
Load all Defaults 47
Low Battery Cut Out 26, 82
Low VAC Dropout 15, 32, 58, 76

M

Max CC/CV Charge Time 20, 35, 60
Max CC/CV Time 35, 122, 123
Max Charge 20, 34, 38, 39, 40, 59, 60, 64, 74, 76, 121, 122, 126, 127, 131
  Amps 60, 122
  Rate 39, 121, 126
  Time 20, 39, 40, 64, 74, 126, 127, 131
Max System Charge Amps 25, 34
Menu Buttons 2, 12, 55
METER Button 2, 18, 49, 117
Mounting
  router 8
Multi-Stage 16, 40, 42

N

Network Cable 6, 8, 9, 44, 97, 112, 149, 150
No BMK 25, 42, 114

O

ON/OFF Buttons 1, 55, 77

P

Parallel Threshold 30, 164
PORT Button 2, 13
Power Save 24
Power-up Fault 25, 86, 92, 112, 114, 115, 126, 128, 129
Power-up Routine 12
PT-100 44
PT Charge Modes 144
  Absorb 144
  Bulk 144
  Charger Off 144
  EQ 144
  Float 144
  Unknown ## 144
PT Control 17

P (Cont.)

PT CTRL Menus
  PT Alarm 132
    FAULT 132
    OFF 132
    ON 132
    VDC 132
  PT Aux Relay 131–132
    DISENGAGE 132
    ENGAGE 132–133
    FAULT 132
    SOC 132
    VDC 132
  PT Chg Ctrl
    Charger Off 130
    Multi-Stage 130
    Start Bulk 131
    Start EQ 131
    Start Float 131
  PT MPPT Ctrl 133
PT Fault Statuses 143
  ARC Fault 143, 146
  Battery Volts 144, 146
  BTS Open 143, 147
  BTS Shorted 143, 147
  FET Overtemp 143, 147
  Ground Fault 135, 143, 147
  HiBatt Temp 143, 147
  High Bat VDC 143, 148
  High PV VDC 143, 148
  Ind Overtemp 143, 148
  Int Hardware 143, 148
  Int NTC 73, 143, 148
  Int Overload 143, 148
  Int Phase 143, 148
  Int Power 143, 149
  Int Pwr Sup 143, 149
  No PV Input 143, 149
  No Stack Comm 144, 149
  Stack ComLost 144, 150
  Stack Switch 144, 150
  Unknown Fault ## 128, 129, 144, 150
  USB Fault 143, 150
PT Menu Maps 137–139
  CTRL 137
  METER 138–139

P (Cont.)

PT Menu Maps (Cont.)
SETUP 140, 141
PT METER Menus 133–136
Aux Relay 134
Clear PT Data History 136
Ground Fault 135
Power to Bat 135
PT-100 Version 136
PT Active 136
PT Data 135–136
PT Status 133–134
PT Volts 134
Target Volts 134
To Batt Now 134
PT Meters 20, 121, 133
PT Operational Statuses 142
Absorb Charging 142
Bulk Charging 142
Charger Off 142
EQ 142
Float Charging 142
Sleeping 142
UnknownStatus ## 142
PT Power Statuses 145
Limit: Above VDC 145
Limit: Int Hz 145
Limit: Int Temp 145
MPPT On 145
Regulating: Amps 145
Regulating: VDC 145
Unknown Power ## 145
PT Relay Statuses 142
Disengage 142
Engage 142
PT Setup 43
PT SETUP Menus
Absorb Done 125–126
Amps 125–126
SOC 126
Time 125
Battery Type 121–125
Bulk Start 127–128
Daily/SunUp 127
SOC 127
Volts 127

P (Cont.)

PowerSave PT Display 130
PT Alarm 121, 129, 132
PT Chg Ctrl 130
PT Max Charge 126–127
PT Relay SOC 121, 129
PT Relay VDC 121, 128, 132
PT TECH Menus 136
Fault History 136
Fault History 44–45
PT-100 Version 136
Temperatures 136
PT Temps 44, 136, 147

R

RC Setup 42, 43, 116
Remote Cable 3, 6, 9, 11, 69, 84
Rotary SELECT Knob 1, 12, 55
RTR Relay 25, 55

S

Safety Instructions ii
Screen Setup 23
SD Card 2, 78
Search 26, 29, 56, 58, 74, 76, 117, 163
SETUP Button 2
SETUP PIN 23, 46
Change PIN 46
Lock SETUP 46
Unlock SETUP 46
Show all Menus 47
SOC 2, 15, 16, 17, 20, 27, 28, 29, 37, 38, 40, 43, 47, 55, 59, 60, 65, 82, 85, 86, 88, 89, 92, 93, 94, 97, 103, 104, 106, 107, 108, 109, 110, 111, 112, 114, 121, 125, 126, 127, 128, 129, 131, 132, 163
SOC Connect 15, 16, 28, 64
Stack Cables 3, 6, 9, 10
Stacking Fault Messages 72
StackClock Fault 72
Stack Mode Fault 72
StackPhase Fault 72
Start Bulk 15, 16, 76, 86, 93, 130, 131
Start Float 16, 20, 130
Status LEDs 1, 56, 130
System AC Amps 19
System, AC Coupled 164

S (Cont.)

System Clock 23
System Fault Messages 66
AC Backfeed Mode 66
AC Overload Fault 66
Breaker Tripped Fault 67
Dead Battery Charge Fault 67
FET Overload Fault 67
High Battery Fault 68
High Battery Temperature 68
High Speed Bus Fault 68
High Volts AC Fault 69
Low Battery Fault 69
No Inverter Found! 69
Overcurrent Fault 70
Overtemp Fault 70
Stuck Relay Fault 70
Tfmr Overtemp Fault 71
Unknown Fault ## 71

T

Target Volts/Battery Temperature 117
TECH Button 2
Temp Display 24
Tfmer Temp 43
Think'n 25, 29, 38, 86, 92, 106, 110, 111, 112, 114, 126, 128, 129
Time Connect 14, 15, 65
Troubleshooting 75, 76, 79, 108
ACLD 120
AGS 105–107
BMK 115
Charger Problems 76
Inverter Problems 76
PT 146–150

U

Unknown Fault ## 25, 86, 92, 112, 114, 115, 128, 129, 144, 150
Update Firmware 47

V

VDC Connect 15, 28, 65
VDC Delay Times 83
Viewing Ports 24

W

Wiring 10, 11, 66, 70, 72, 76, 93, 107, 146
Aux Relay 11

NOTES

MAGNUM ENERGY

DMX POWER

64-0091 E Owner’s Manual, ME-ARTR