CSW2024

Pure Sine Wave Inverter

Owner's Manual

Disclaimer of Liability

Since the use of this manual and the conditions or methods of installation, operation, use and maintenance of the CSW2024 inverter is beyond the control of DMX Power, this company does not assume responsibility and expressly disclaims liability for loss, damage or expense, whether direct, indirect, consequential or incidental, arising out of or in any way connected with such installation, operation, use, or maintenance.

Note as well that while every precaution has been taken to ensure the accuracy of the contents of this manual, the specifications and product functionality may change without notice. DMX Power assumes no responsibility for errors or omissions.

Restrictions on Use

The CSW2024 inverter may only be used in life support devices and systems with the express written approval of DMX Power. Failure of this inverter can reasonably be expected to cause failure of that life support device or system, or to affect the safety or effectiveness of that device or system. If the CSW2024 inverter fails, it is reasonable to assume the health of the user or other persons may be endangered.

Copyright Notice

Copyright © 2026 by DMX Power LLC. All rights reserved. Permission to copy, distribute, and/or modify this document is prohibited without express written permission from DMX Power.

Document Information

Description – CSW2024 Owner's Manual
Part Number and Revision – 64-0090 Rev C
Date Published – March 2026

The entire manual is available for download—with many of the diagrams available in color—from our website at: www.dmx-power.com

Contact Information

DMX Power
Phone: 800-553-6418 or 651-653-7000
Technical Questions: support@dmx-power.com
Warranty or RMA: warranty@dmx-power.com
Web: www.dmx-power.com

Statement of Appreciation

Thank you from all of us at DMX Power for purchasing this CSW2024 inverter. At DMX Power, we are committed to providing you with quality products and services, and hope that your experience with us is pleasant and professional.

Record the unit's model and serial number in case you need to provide this information in the future. It is much easier to record this information now, instead of trying to gather it after the unit has been installed.		
Model:	**Serial Number:**	
CSW2024	BT	

IMPORTANT PRODUCT SAFETY INSTRUCTIONS

This manual contains safety instructions that must be followed during the installation and operation of this product. Read all instructions and safety information on the inverter and in this manual before installing or using.

Safety Symbols

To reduce the risk of electrical shock, fire, or other safety hazard, the following safety symbols have been placed throughout this manual to indicate dangerous situations and important safety instructions.

WARNING: Indicates that failure to take a specified action could result in physical harm to the user.

CAUTION: Indicates that failure to take a specified action could result in damage to the equipment.

Info: Indicates information that emphasizes or supplements important points of the main text.

Product Safety Warnings

WARNINGS: Failure to follow the instructions below and in this manual can result in death or serious injury.

- All electrical work must be performed in accordance with local, state and federal electric codes.
- This product is designed for indoor/compartment installation. Do not expose to rain, snow, moisture, or liquids of any type.
- Use insulated tools to reduce the chance of electrical shock or accidental short circuits. Be sure to remove all jewelry such as rings, watches, bracelets, etc., when installing or performing maintenance on the inverter.
- Always disconnect the batteries or energy source prior to installing or performing maintenance on the inverter. Live power may be present at more than one point since an inverter utilizes both batteries and AC.
- Do not cover or obstruct any air vent openings and/or install in a zero-clearance compartment—always operate unit in an open area.
- When working with electrical equipment or lead acid batteries, have someone nearby in case of an emergency.
- Study and follow all the battery manufacturer's specific precautions when installing, using, and servicing the battery connected to the inverter.
- When working with batteries wear eye protection and gloves, and avoid touching your eyes. Keep fresh water and soap on hand in case battery acid comes in contact with eyes. If this occurs, cleanse right away with soap and water for a minimum of 15 minutes and seek medical attention.
- Batteries produce explosive gases, DO NOT smoke or have an open spark or fire near the system.
- Avoid dropping any metal tool or object on the battery. Doing so could create a spark or short circuit which goes through the battery or another electrical tool and may cause an explosion.
- These inverters provide household AC, treat the AC output sockets the same as regular wall AC sockets at home.
- Explosion hazard! DO NOT use this inverter in the vicinity of flammable fumes or gases (such as propane tanks or large engines).
- These inverters contain no user-serviceable parts. See the Warranty section for how to handle service issues.

Table of Contents

1.0 Introduction 1
1.1 CSW2024 Front Panel Features 1
1.2 CSW2024 Back Panel Features 2
1.3 Regulatory Compliance 2
2.0 Installation 3
2.1 Pre-Installation 3
2.1.1 Installation Guidelines 3
2.1.2 Unpacking and Inspection 3
2.1.3 Tools Required 3
2.2 Locating and Mounting the Inverter 6
2.3 Wiring the Inverter – General Requirements 8
2.3.1 Wiring Requirements 8
2.3.2 Torque Requirements 8
2.4 DC Wiring 8
2.4.1 DC Wire Sizing 9
2.4.2 DC Overcurrent Protection 10
2.4.3 DC Grounding 11
2.4.4 DC Cable Connections 11
2.4.5 Wiring the Battery Bank 12
2.4.6 Wiring the Inverter to the Battery Bank 13
2.5 Testing the Inverter 14
2.5.1 Inverter Functional Test 14
2.5.2 GFCI Function Test 14
3.0 Operation 15
3.1 Operating the CSW2024 15
3.2 Understanding Loads 16
3.2.1 Setting the Load Sense Function 16
3.2.2 Addressing Load Issues 16
3.2.3 Appliances and Run Time 17
3.3 System Maintenance 17
4.0 Troubleshooting 18
5.0 Specifications 19

List of Figures

Figure 1-1, Front Panel Features 1
Figure 1-2, Back Panel Features 2
Figure 2-1, Basic System Diagram 4
Figure 2-2, RV OEM System Diagram 5
Figure 2-3, Approved Mounting Positions 7
Figure 2-4, CSW2024 Dimensions 7
Figure 2-5, DC Cable to Battery Terminals 11
Figure 2-6, DC Cable to Inverter's DC Terminals 12

Tables

Table 2-1, DC Wire/Overcurrent Device for Rated Use 10
Table 3-1, Examples of Digital Display Readings 15
Table 3-2, Appliance Power Consumption and Run Time 17
Table 4-1, Troubleshooting Guide 18
Table 4-2, Error Codes 18
Table 5-1, CSW2024 Specifications 19

1.0 Introduction

Congratulations on your purchase of the CSW2024 pure sine wave inverter—from DMX Power. The CSW2024 inverter is a "pure" sine wave inverter designed to be powerful, yet simple to operate, and will provide you with reliable AC power for trouble-free use. Please review this Introduction section to familiarize yourself with the features and benefits of your CSW2024 inverter.

1.1 CSW2024 Front Panel Features

The front panel of the CSW2024 inverter is equipped with the following features (see Figure 1-1):

1. **Serial Number** – the unique identification number assigned to each unit (with a model-specific prefix).
   Note: *Enter the inverter's serial number in the table on page i. It is to easier to record this information now, instead of trying to gather it after the unit has been installed.*
2. **GFCI** – a Ground Fault Circuit Interrupter protected AC outlet. The 20-amp GFCI outlet quickly stops the flow of electricity in the event a ground fault occurs on the device that is plugged into the inverter.
3. **Status Indicator** – an at-a-glance LED that provides the inverter's status—lights green, red, or amber (see Section 3.0 Operation).
4. **Digital Display** – a three-character alphanumeric display that shows the inverter's measured battery voltage, total AC output power, and any error or warning codes.
5. **Power/Select Button** – a momentary button switch that allows the inverter to be quickly turned on or off.
6. **Remote Switch Port** – a RJ12 connector that allows an optional remote switch to be connected via a remote cable.
   Note: *Remote switch is sold separately (PN: CSW-RS).*
7. **USB Port** – allows USB-enabled devices to be powered and charged.

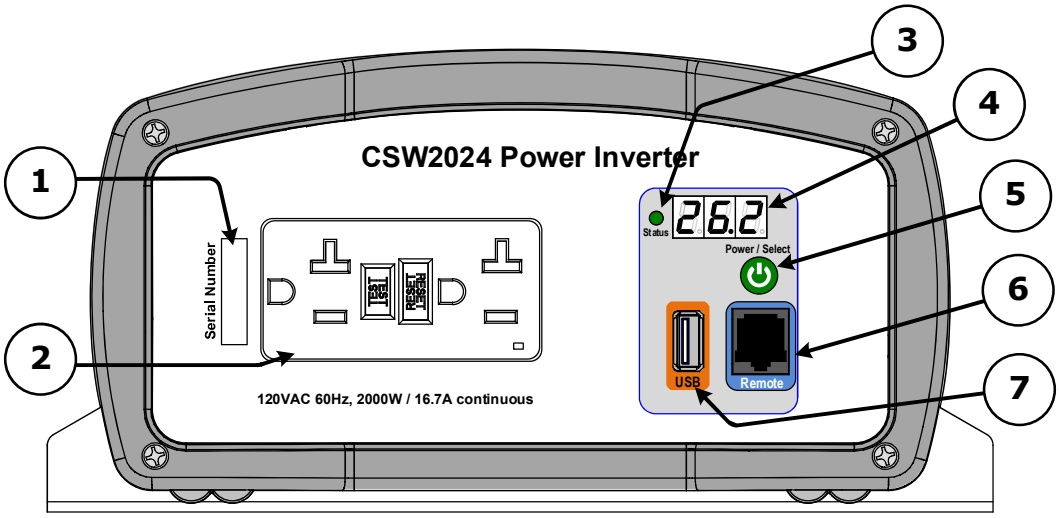

Figure 1-1, Front Panel Features

1.2 CSW2024 Back Panel Features

The back panel of the CSW2024 inverter is equipped with the following features (See Figure 1-2):

8. **Mounting Flanges (front and rear)** – used to mount and secure the inverter to a shelf/wall.
9. **Cooling Fans** – intake cooling fans that automatically turn on when the inverter's internal temperature rises above a safe level, and turn off when the inverter's internal temperature falls to a safe level.
10. **Model Number** – the model number of the inverter (i.e., CSW2024), and other information.
11. **DC Positive Terminal (red)** – the inverter's connection to the positive terminal on the 24 VDC battery bank.
12. **DC Negative Terminal (black)** – the inverter's connection to the negative terminal on the 24 VDC battery bank.
13. **DC Chassis Ground Connection** – the connection that is used to tie the exposed chassis of the inverter to the DC grounding system.

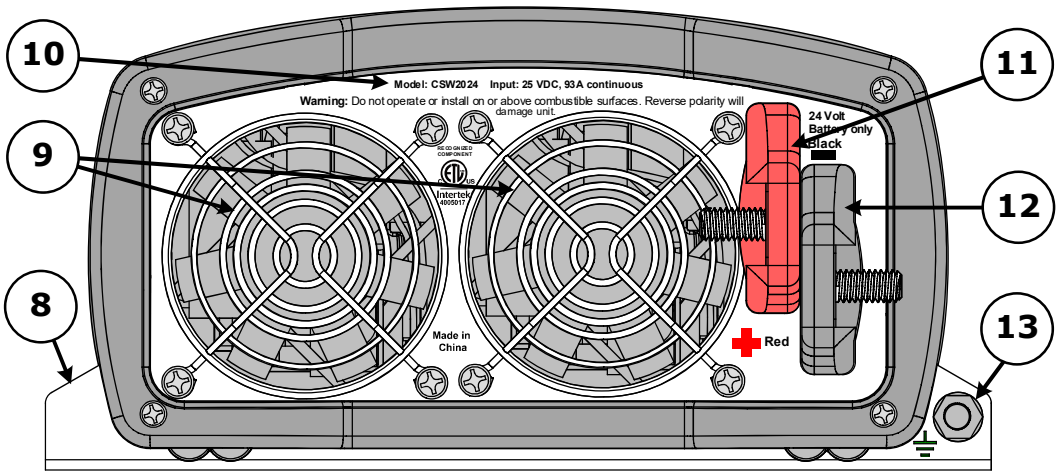

Figure 1-2, Back Panel Features

1.3 Regulatory Compliance

The CSW2024 inverter is intended to be used for land vehicles (RVs, trucks) or marine craft. It is listed to UL Standard 458, 5th Edition (Power Converters/ Inverters and Power Converter/Inverter Systems for Land Vehicles and Marine Crafts) for use in the US; and is also certified to CSA Standard C22.2 No. 107.1-01 (General Use Power Supplies) for use in Canada.

This inverter has been tested and certified to product safety standards by Intertek Testing Services (known as ETL)—a Nationally Recognized Testing Laboratory (NRTL) qualified organization that meets OSHA regulations to perform independent safety testing and product certification.

FCC and EMC Information

This equipment has been tested and found to comply with the limits for a Class B digital device, pursuant to part 15 of the FCC Rules. These limits are designed to provide reasonable protection against harmful interference in a residential installation. This equipment generates, uses, and can radiate radio frequency energy and, if not installed and used in accordance with the instructions, may cause harmful interference to radio communications.

2.0 Installation

Review this section and all safety instructions before proceeding with the installation of your inverter.

WARNING: Installations should be performed by qualified personnel, such as a licensed or certified electrician. The installer determines which safety codes apply and ensures all applicable installation requirements are followed. Applicable installation codes vary depending on the specific location and application.

WARNING: Before installing, review the "Important Product Safety Information" on page ii and adhere to all cautionary markings located on the inverter and on the batteries.

2.1 Pre-Installation

Before proceeding, read the entire Installation section to determine how best to install your CSW2024 inverter. The more thorough you plan in the beginning, the better your inverter needs will be met. Depending on your application, there are simplified system diagrams shown in Figures 2-1 and 2-2. These should be reviewed to assist you in planning and designing your installation. These drawings are not intended to override or to restrict any national or local electrical codes, and should not be the determining factor as to whether the installation is compliant, that is the responsibility of the electrician and the onsite inspector.

2.1.1 Installation Guidelines

- Before connecting any wires, determine the cable routes throughout the vehicle or boat, both to and from the inverter.
- Always check for existing electrical, plumbing, or other areas of potential damage BEFORE drilling or cutting into walls.
- Make sure all wires have a smooth bend radius and do not become kinked.
- If installing this inverter in a boat, RV or truck, ensure the conductors passing through walls, bulkheads, or other structural members are protected. This minimizes insulation damage (such as chafing), which can be caused by vibration or constant rubbing.

2.1.2 Unpacking and Inspection

Carefully remove the inverter from its shipping container and inspect all contents. Verify the following items are included:

- CSW2024 inverter
- CSW2024 Owner's Manual

If items appear to be missing or damaged, contact your authorized DMX Power dealer or DMX Power directly.

*** ***Save your proof-of-purchase as a record of your ownership; it is needed if the unit should require in-warranty service.*** ***

2.1.3 Tools Required

Installing the inverter is simple and requires the following:

- Adjustable wrench (10-13 mm)
- #10 Mounting screws (x4)
- Level
- Pencil
- Drill/Drill bits
- Phillips screwdriver

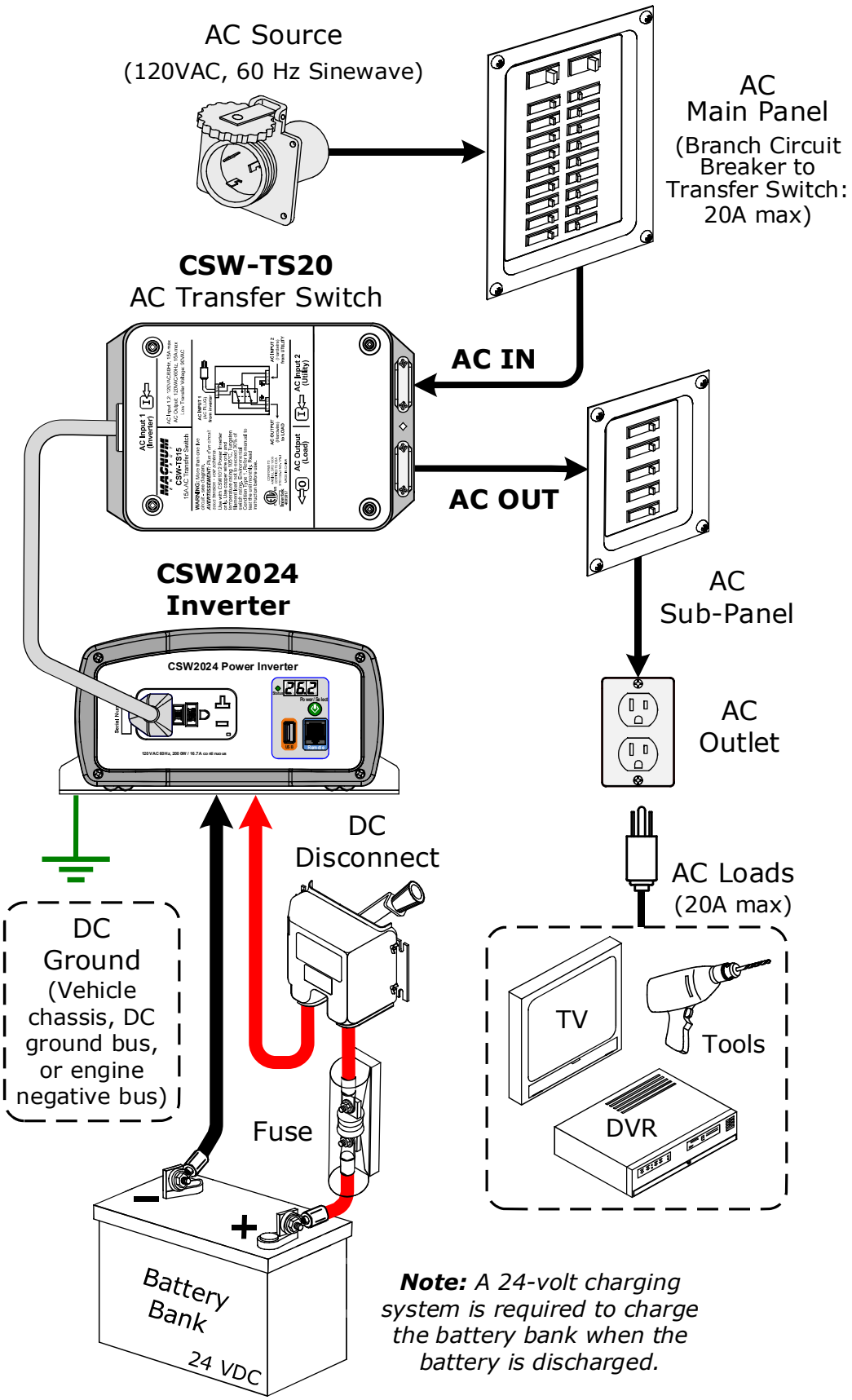

Note: *A 24-volt charging system is required to charge the battery bank when the battery is discharged.*

Figure 2-1, Basic System Diagram

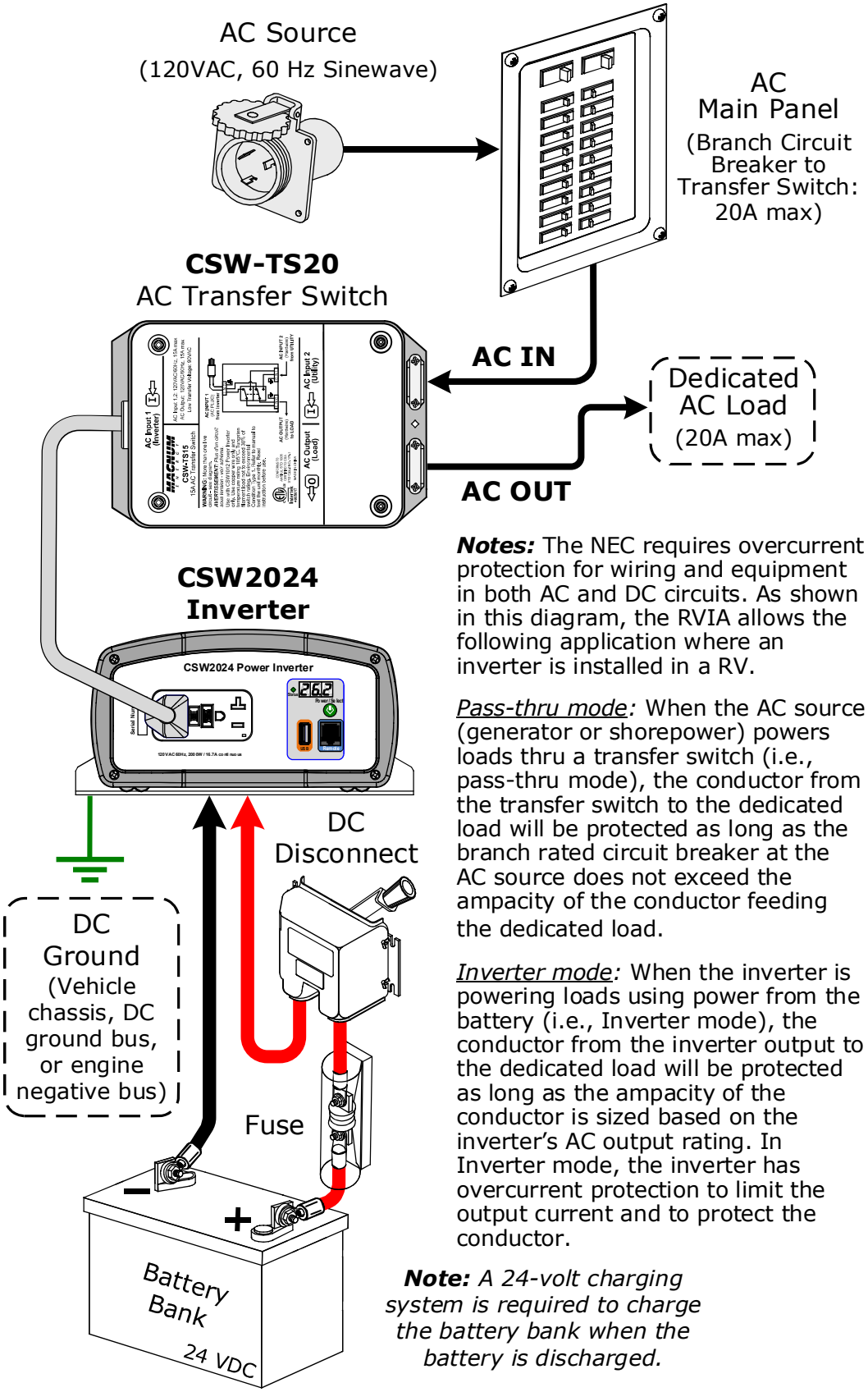

Notes: The NEC requires overcurrent protection for wiring and equipment in both AC and DC circuits. As shown in this diagram, the RVIA allows the following application where an inverter is installed in a RV.

Pass-thru mode: When the AC source (generator or shorepower) powers loads thru a transfer switch (i.e., pass-thru mode), the conductor from the transfer switch to the dedicated load will be protected as long as the branch rated circuit breaker at the AC source does not exceed the ampacity of the conductor feeding the dedicated load.

Inverter mode: When the inverter is powering loads using power from the battery (i.e., Inverter mode), the conductor from the inverter output to the dedicated load will be protected as long as the ampacity of the conductor is sized based on the inverter's AC output rating. In Inverter mode, the inverter has overcurrent protection to limit the output current and to protect the conductor.

Note: *A 24-volt charging system is required to charge the battery bank when the battery is discharged.*

Figure 2-2, RV OEM System Diagram

2.2 Locating and Mounting the Inverter

WARNINGS:

- Do not mount the inverter near any flammable or combustible fluid or components.
- Provide adequate clearance/ventilation to the inverter. Do not cover or obstruct any air vent openings and/or install in a zero-clearance compartment.

The inverter should only be installed and mounted in a location that meets the following requirements:

Clean and dry – The inverter should not be installed in an area that allows dust, fumes, insects, or rodents to enter or block the inverter's ventilation openings. This area also must be free from any risk of condensation, water, or any other liquid that can enter or fall on the inverter. Inverter failure under these conditions is not covered under warranty.

Cool – The inverter should be protected from direct exposure to the sun or to any equipment that produces extreme heat. The ambient temperature should be between 32°F (0°C) and 104°F (40°C); note that the inverter's output specifications are rated at 77°F (25°C), so the cooler the better.

Ventilated – In order for the inverter to provide full output power and avoid over-temperature fault conditions, do not cover or block the inverter's ventilation openings, or install this inverter in an area with limited airflow. Allow a minimum airspace clearance of 3" (7.6 cm) around the unit to provide optimum ventilation.

Safe – Keep any flammable/combustible material (e.g., paper, cloth, plastic, etc.,) that may be ignited by heat, sparks, or flames at a minimum distance of 2 feet (60 cm) away from the inverter. Do not install in any area that contains extremely flammable liquids like gasoline or propane, or in locations that require ignition-protected devices.

Close to the battery bank – As with any inverter, it should be located as close to the batteries as possible. Long DC wires tend to lose efficiency and reduce the overall performance of an inverter. However, the unit should not be installed in the same compartment as the batteries or mounted where it will be exposed to gases produced by the batteries. These gases are corrosive and will damage the inverter; also, if these gases are not ventilated and if allowed to collect, they could ignite and cause an explosion.

Accessible – Do not block access to the front or back of the inverter. Allow room to view any indictors or digital display and to access the AC and DC wiring connections—they will need to be checked and tightened periodically.

Orientating the inverter – The CSW2024 inverter can be mounted on/ underneath a horizontal surface (shelf or table), or on a vertical surface (wall or bulkhead) with the DC terminals facing left, right, or up—do not mount with the DC terminals facing downward (see Figure 2-3).

After determining your mounting position, use the base of the inverter's chassis as a template to mark your mounting screw locations (or, refer to the dimensions in Figure 2-4). Remove the inverter and drill pilot holes into the mounting surface. Secure the inverter to the surface using the appropriate corrosion-resistant hardware. If this unit is used in a mobile application, you may want to place flexible washers or bushings between the mounting surface and the inverter's mounting flanges to reduce vibration.

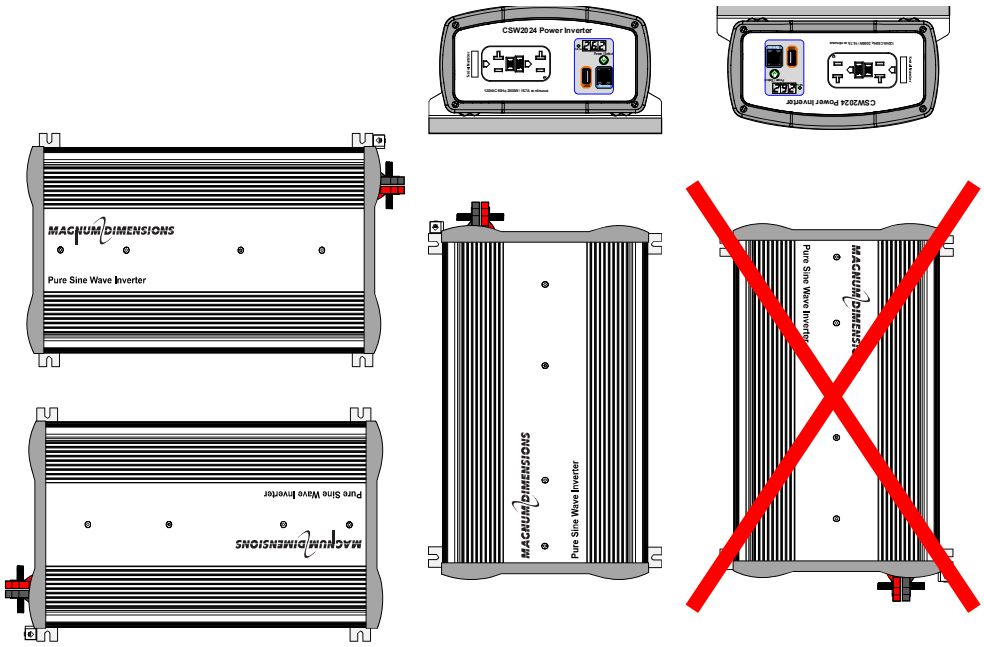

DO NOT *mount with the DC terminals facing downward.*

Figure 2-3, Approved Mounting Positions

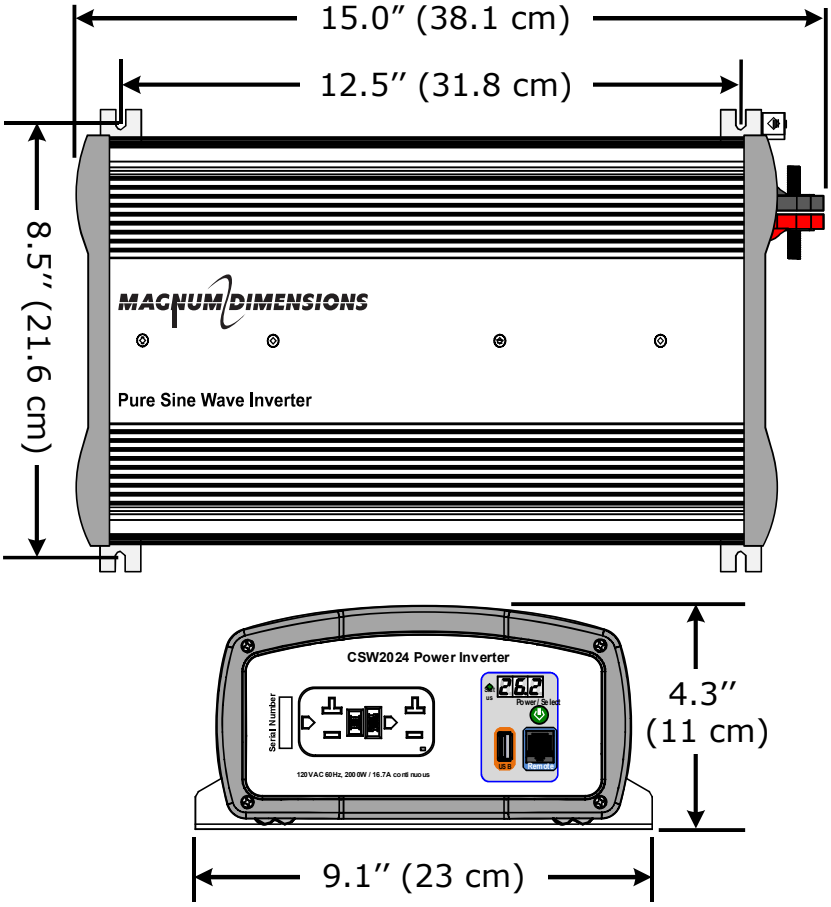

Figure 2-4, CSW2024 Dimensions

2.3 Wiring the Inverter – General Requirements

This section describes the requirements and recommendations for wiring the CSW2024 inverter. Before wiring the inverter, carefully read all instructions.

WARNING: Wiring should meet all local codes/standards and be performed by qualified personnel (i.e., licensed electrician).

2.3.1 Wiring Requirements

- All conductors that are at risk for physical damage must be protected by tape or placed in a raceway.
- Always check for existing electrical, plumbing, or other areas of potential damage prior to making cuts in structural surfaces or walls.
- Where DC wiring must cross AC or vice-versa, try to make the wires at the crossing point perpendicular (90 degrees) to one another.
- DC overcurrent protection must be provided as part of the installation.
- Use only copper wires with a minimum temp rating of 167°F (75°C).
- Ensure all conductor insulation is of a type that is approved for the voltage, operation, temperature and location of use.

2.3.2 Torque Requirements

All wiring to the DC terminals and DC ground connection should be checked periodically (once a month) for proper tightness. Tighten the DC terminals and ground connections from 8.8 to 9.6 lbf-ft (12 to 13 N-m). If you don't have a torque wrench, ensure all connections are tight.

2.4 DC Wiring

This section describes the inverter's required DC wire sizes, the recommended disconnect/overcurrent protection, and how to make the DC connections to the inverter and the battery bank.

WARNING: Even though DC voltage can be regarded as "low voltage", significant hazards may be present, particularly from short circuits of the battery system.

CAUTION: The inverter is NOT reverse polarity protected—which means if the negative and positive battery voltage is connected to the inverter backwards, the inverter will likely be damaged. Use a voltmeter to verify the correct polarity BEFORE connecting the DC wires.

CAUTION: DO NOT connect the battery cables to the inverter until all wiring is complete and the correct DC voltage and polarity have been verified.

Refer to Figure 2-5 when connecting the DC wires to the battery, and to Figure 2-6 when connecting to the inverter.

Consider the following to ensure maximum performance:

The DC positive and negative cables connected to the inverter from the battery bank should be tied together with wire ties/straps or electrical tape approximately every 6" (15.3 cm). This helps improve the surge capability and reduces the effects of inductance, which improves the inverter waveform and reduces the wear of the inverter's filter capacitors. Keeping the battery cables close together also reduces the chance of radio frequency interference.

Be aware that over-tightening or misthreading the nuts on the DC terminals can cause the bolts to strip and snap/break off.

Make sure cables have a smooth bend radius and do not become kinked. Follow existing wire runs where possible.

Crimped and sealed copper ring terminal lugs with at least a 1/4” (6 mm) bolt hole to connect the DC wires to the inverter’s DC terminals.

The battery bank voltage MUST be between 21.0 – 31.0V for the inverter to operate. If the voltage exceeds 32.0V, the inverter may be damaged.

To ensure the maximum performance from the inverter, all connections from the battery bank to the inverter should be minimized. The exceptions are the DC fuse and disconnect, or the DC circuit breaker—required at the battery to protect the DC wiring—in the positive line. Any other additional connection will contribute to additional voltage drops, and these extra connection points may loosen during use.

When connecting the battery cables to the inverter DC terminals a brief spark or arc may occur; this is normal and due to the inverter’s internal capacitors being charged.

Before routing the wiring, color code the DC cables/wires with colored tape or heat shrink tubing: RED for positive (+); WHITE for negative (–); and GREEN (or bare copper) for DC ground, to avoid polarity problems.

A cable should be connected directly from the inverter negative terminal to the battery negative connection; this ensures the inverter has a reliable return path directly to the battery. Do not use the chassis in place of the battery negative connection to the inverter.

2.4.1 DC Wire Sizing

It is important to use the correct sized DC wire to achieve maximum efficiency from the system and to reduce fire hazards associated with overheating. Always keep your wire runs as short as practical to prevent low voltage shutdowns and to keep the DC breaker from nuisance tripping (or open fuses) because of increased current draw. See Table 2-1 to select the minimum DC wire size (and corresponding overcurrent device) required based on your inverter model. The cable sizes listed in this table are required in order to reduce stress on the inverter, minimize voltage drops, increase system efficiency, and ensure the inverter’s ability to surge heavy loads.

If the distance from the inverter to the battery is >5 feet (1.5 m), the DC wire needs to be increased. Longer cable distances can affect the inverter’s performance. See the lower part of Table 2-1 to determine the minimum DC wire size needed for various distances >5 feet (1.5 m).

Note: *In an OEM RV application, a smaller DC wire (with appropriate overcurrent protection) may be used if the inverter will only be connected to a dedicated load (as shown in Figure 2-2), and the inverter and dedicated load have been thoroughly tested and sold together by the OEM as a complete system.*

Table 2-1, DC Wire/Overcurrent Device for Rated Use

		CSW2024
Full Load Current		95 amps
Maximum Continuous Current[1]		119 amps
Minimum DC Ground Wire Size[2]		#8 AWG (8.4 mm^2)
Minimum DC Wire Size [167°F/75°C rating in free air][3]		#2 AWG (33.6 mm^2) [170 amps]
Maximum DC Fuse Size		150 amps with time delay
Increased size for longer distance	**5 – 10 feet (1.5 – 3 m)**	#1 AWG (42.4 mm^2)
	10 – 15 feet (3 – 4.6 m)	#1/0 AWG (53.5 mm^2)

Note[1]: *Maximum Continuous Current is based on the inverter's continuous power rating at the lowest input voltage with an efficiency factor.*

Note[2]: *The grounding conductor for the DC system shall meet the sizing requirements specified in the NEC for the application, but must be no smaller than 2 AWG (33.6 mm^2) copper. In some applications, the DC grounding conductor is required to be no less than the wire size for the DC positive/negative cables. For Marine applications, the DC grounding cable size may be one size smaller than the minimum size required for the DC current-carrying conductors, and the conductor must be no smaller than #10 AWG (5.3 mm^2).*

Note[3]: *Copper wire rated with 167°F (75°C) insulation at an ambient temperature of 86°F (30°C), with a multiple cable fill factor (0.8) derating (if needed).*

2.4.2 DC Overcurrent Protection

For safety reasons and to comply with electrical code regulations, DC overcurrent protection must be provided as part of the installation. The DC overcurrent protection device must be installed in the positive DC cable line, it can be a fuse (with a disconnect switch) or a circuit breaker and must be DC-rated. It must be correctly sized according to the size of DC cables being used, which means it is required to open before the cable reaches its maximum current carrying capability, thereby preventing a fire. The NEC requires both overcurrent protection and a disconnect switch.

Because batteries can deliver thousands of amps in an instant during a short, you are required to install a DC-rated fuse (or circuit breaker) that has a interrupt current rating (i.e., Amps Interrupting Current or AIC) that can withstand the short-circuit current without explosion or damage. If a fuse is used as an overcurrent device, a Class-T type or equivalent is highly recommended when used with inverters. A Class-T fuse is rated for DC operation, can handle very high short-circuit currents (up to 100,000 amps), and has a time delay that allows for momentary current surges from the inverter without opening the fuse. In some installations, if the combined short-circuit current of all the batteries in the bank is determined to be 2,700 amps or less, then an ANL type of fuse may be used—if in doubt, use a Class-T fuse. Refer to Table 2-1 for the fuse size for your inverter.

2.4.3 DC Grounding

The inverter should always be connected to a permanent, grounded wiring system. The idea is to connect the metallic chassis of the various enclosures together to have them at the same voltage potential and to reduce the possibility for electric shock. For most installations, the inverter chassis and the negative battery conductor are connected to the system's ground bond via a safety grounding conductor (bare wire or green insulated wire) at only one point in the system. The grounding conductor for the DC system shall meet the sizing requirements specified in the NEC for the application, but must be no smaller than 8 AWG (8.4 mm^2) copper. *For instance: An inverter used in a marine application under ABYC guidelines requires the size of the DC grounding conductor to be of an ampacity equal to or one size less than that of the DC positive conductor.* See Table 2-1 for the minimum ground wire size recommended for your inverter.

Info: If the inverter is installed in a vehicle, connect the battery negative cable directly to the inverter's negative terminal. DO NOT connect the negative battery cable meant for the inverter to the vehicle's frame/safety ground.

Info: The DC grounding system could be the vehicle's chassis, the DC grounding bus, or the engine's negative bus.

2.4.4 DC Cable Connections

Do not put anything between the battery cable ring lug and the battery post (see Figure 2-5), or the flat metal part of the inverter's DC terminal (see Figure 2-6). When connecting the battery cable, it should be placed directly against the battery post or inverter terminal. Incorrectly installed hardware causes a high resistance connection which could lead to poor inverter performance, and may melt the cable and terminal connections. See Table 2-1 for the torque requirements.

Info: The DC terminal and Hex nuts are made of stainless steel, which has a high likelihood of galling or thread seizing while being tightened—causing the bolts to strip or to snap/break off. To reduce this risk, use an anti-seize lubricant, tighten the fasteners slowly (at low rpms) without interruption, and apply only light pressure.

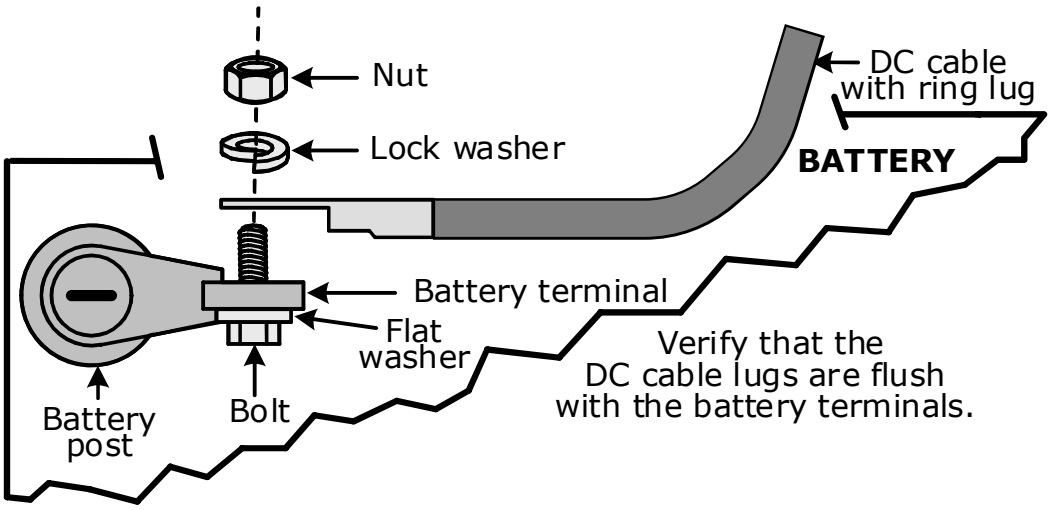

Figure 2-5, DC Cable to Battery Terminals

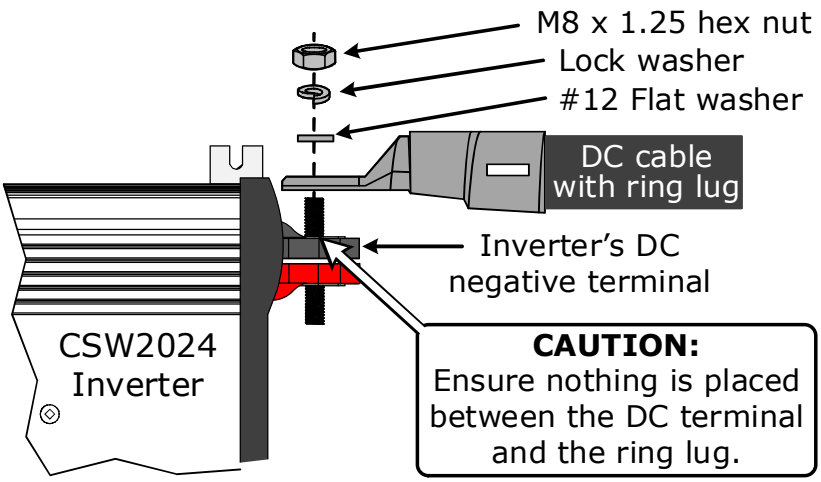

Figure 2-6, DC Cable to Inverter's DC Terminals

2.4.5 Wiring the Battery Bank

WARNING: Lethal currents will be present if the positive and negative cables attached to the battery bank touch each other. During the installation and wiring process, ensure the cable ends are insulated or covered to prevent touching/shorting the cables.

Info: DO NOT connect the DC wires from the battery bank to the inverter until 1) all DC wiring is complete, 2) the correct DC overcurrent protection has been installed, and 3) the correct DC voltage and polarity have been verified.

Depending upon battery voltage (6, 12, or 24 VDC), the batteries must be wired in series, parallel, or series-parallel to provide the correct voltage. The interconnecting DC wires must be sized and rated exactly the same as those used between the battery bank and the inverter.

Place the batteries as close as practical to the inverter, preferably in an insulated and ventilated enclosure. Allow adequate space above the batteries to access the terminals and vent caps (as applicable). Also, allow at least 1" (2.5 cm) of space between the batteries to provide good air flow. DO NOT mount the batteries directly under the inverter.

CAUTION: Install batteries in a well ventilated area. Batteries can produce explosive gasses. For compartment or enclosure installations, always vent batteries to the outside.

Info: To ensure the best performance from your inverter system, batteries should be of the same size, type, rating, and age. Do not use old or untested batteries.

2.4.6 Wiring the Inverter to the Battery Bank

CAUTION: The inverter is NOT reverse polarity protected—if the positive terminal of the battery is connected to the negative terminal of the inverter and vice versa, severe damage to the inverter will occur and this will void the warranty. Before connecting the DC wires from the batteries to the inverter, verify the correct battery voltage and polarity using a voltmeter. Color code cables [red = positive (+), white = negative (–)] to avoid polarity confusion.

Info: The DC overcurrent device (i.e., circuit breaker or fuse) must be placed in the positive (red) DC cable line between the inverter's positive DC terminal and the battery's positive terminal (red)—as close to the battery as possible. For maximum protection, install it within 18" (45 cm) of the battery. ***Note:*** *For Marine applications, install within 7" (17.8 cm) of battery.*

Follow the steps below to wire the inverter to the battery bank:

1. Route an appropriately sized DC negative wire (marked white) from the negative terminal of the battery bank to the inverter's negative terminal (Item 12, Figure 1-2).
2. Mount the fuse/disconnect assembly (or circuit breaker) as near as practical to the batteries and leave open (i.e., no power to inverter).

   WARNING: DO NOT close the DC circuit breaker or connect the fuse to connect battery power to the inverter at this time. This will occur after the installation is complete.

   CAUTION: If connecting live battery cables to the inverter DC terminals, a brief spark or arc may occur; this is normal and due to the inverter's internal capacitors being charged.

3. Route and connect an appropriately sized DC positive wire (marked red) from the inverter's positive DC terminal (Item 11, Figure 1-2) to one end of the fuse/disconnect assembly (or circuit breaker).
4. Connect a short wire (same rating as the DC wires) to the other side of the DC circuit breaker (or one end of the fuse/disconnect assembly) and the other end of that short wire to the positive terminal of the battery bank (see Figure 2-1 or Figure 2-2 for reference). This is essential to ensure even discharging across the entire battery bank.
5. Ensure DC wire connections (on batteries, inverter, and DC circuit breaker/fuse) are flush on the surface of the DC terminals, and all the connecting hardware are stacked correctly (see Figures 2-5 and 2-6). Verify all DC connections on the inverter are torqued correctly (see Table 2-1), and the total cable distance from the inverter to the battery is within the requirement of Section 2.4.1 (DC Wire Sizing).
6. Once the DC connections are completely wired and tested, coat the terminals with an approved anti-oxidizing spray.
7. If batteries are in an enclosure, perform a final check of the connections to the battery terminals, then close and secure the battery enclosure.
8. Route an appropriately sized DC ground wire (see Table 2-1) from the inverter's DC chassis ground connection to a dedicated system ground.
9. Once entire installation is complete and all connections verified, close the fuse disconnect (or circuit breaker) to provide power to the inverter.

2.5 Testing the Inverter

Before proceeding, first test whether the inverter was successfully installed. Use the functional test below to test the inverter, and then perform the GFCI test that follows to ensure the protection device is functioning properly.

2.5.1 Inverter Functional Test

After all electrical connections to the inverter and batteries have been completed, plug a small AC load (e.g., 40W light bulb or small appliance) into the GFCI's outlet, and then follow these steps to test the installation and the inverter's operation.

1. Press and hold the *Power/Select* button until a beep sound is heard (about 1 second). The *Status* light turns on.
2. Check that the digital display alternately shows the inverter's measured battery voltage and output power.
3. Check that the AC load is on (i.e., the bulb lights).
   Note: *If the bulb does not light, the GFCI may have tripped. Reset the GFCI by pressing the RESET button*.

If the inverter passes all steps, it is functioning properly and ready for use.

If the inverter fails any steps, refer to Section 4.0 Troubleshooting.

2.5.2 GFCI Function Test

Use the steps below to periodically test the GFCI to ensure proper functioning.

1. Turn the inverter on.
2. Plug a small AC load (e.g., 40W light bulb) into the GFCI's outlet.
3. Check that the AC load is on (i.e., the bulb lights).
4. Press the GFCI's *TEST* button. The GFCI's *RESET* button should pop out, and the power should shut off (light bulb goes out).
   Note: *If the bulb remains lit or the RESET button does not pop out, the GFCI may not be functioning properly or the load sensing function may need to be disabled. See Section 3.2.1*.
5. Press the RESET button. The AC load (light bulb) should come back on.

3.0 Operation

The CSW2024 inverter transforms direct current (DC) from the batteries into a pure sine wave alternating current (AC). This AC is used to power any electrical appliances (i.e., AC loads) connected to the inverter's output.

3.1 Operating the CSW2024

The CSW2024 inverter's front panel contains a power/select button, a status indicator, a digital display for viewing system status, a remote port, a USB port, and a GFCI AC output receptacle.

Power/Select Button – The Power/Select button turns the inverter on and off. To turn the unit on, press and hold the button for 1 second until you hear a "beep". See info on the Load Sense feature (i.e., Search Watts) in Section 3.2.

WARNING: The Power/Select button is not a power disconnect switch and will not remove the DC power from the inverter. Disconnect all power to the inverter before working on the inverter.

Status Indicator – The Status Indicator may light green, amber, or red to indicate the inverter's status. When the status indicator LED lights:

- **Green** – the inverter is operating normally.
- **Amber** – a warning has been detected. The inverter may shut down at any time. Check the error code on the digital display.
- **Red** – an error has been detected and the unit has shut down. Check the error code on the digital display.

When the Status indicator lights either amber or red, use the digital display and the troubleshooting tables in Section 4.0 to resolve the issue.

Digital Display – The Digital Display has one line of three alphanumeric characters that alternately shows the inverter's measured battery voltage (in volts) and AC output power (in kilowatts) under normal operating conditions. It also displays error/warning codes to alert you to problems with the unit, and are used in conjunction with the troubleshooting tables in Section 4.0 to resolve any issues with the inverter's operation. See Table 3-1 below.

Table 3-1, Examples of Digital Display Readings

Display	Meaning
LS0	Load Sense setting (indicates Load Sense function is disabled).
25.0	Measured battery voltage.
0.80	Total AC output power in kW (800W as shown).
E01	Error or warning code. See Troubleshooting section for details.

Remote ON/OFF Switch Port – The Remote Switch Port is used to connect an optional ON/OFF remote switch (sold separately) that works in parallel with the Power/Select button.

USB Port – The USB Port enables you to power and charge a USB-enabled device (provides 5 VDC/2.1 A).

CAUTION: Some USB-powered devices may be damaged when connected to this USB port—check with device manufacturer.

GFCI Outlet – The two 20-amp GFCI-protected AC outlets are used to plug in and power an AC load. It protects the user against hazardous electrical shocks.

3.2 Understanding Loads

This section covers how the CSW2024 inverter handles various connected AC loads (and no loads—per the Load Sense function). The CSW2024 inverter can power most connected loads within its power rating, however there are special conditions that can cause a load to behave differently than expected.

3.2.1 Setting the Load Sense Function

This Load Sense feature allows you to reduce the current draw when no AC load is connected to the inverter. This feature reduces power consumption in order to conserve power drawn from the batteries.

When Load Sense is disabled, the inverter provides 120V output at all times.

When Load Sense is enabled, the inverter's AC output switches ON every few seconds to detect any connected AC load. If a connected load is >10W, the AC output remains ON continuously until the AC load is reduced to <3W. At this point, the CSW2024 resumes its normal ON/OFF function until it senses a connected AC load of >10W again.

Upon powering up the CSW2024 inverter, the digital display briefly shows either "*LS0*" (Load Sense disabled, default setting) or "*LS1*" (Load Sense enabled) to indicate the current Load Sense setting.

To enable/disable the Load Sense function:

1. Press and hold the Power/Select button for 5 seconds to enter Load Sense select mode. Display shows the current setting ("LS0" or "LS1").
2. Press the Power/Select button once to change the current setting. The unit will automatically exit the select mode after 5 seconds.

3.2.2 Addressing Load Issues

Following are some common problems encountered when using this inverter.

USB loads: When using the USB connector, be sure that the device you will be connecting will accept 5 volts (≤2.1 A) and can be charged or powered using another power source. The USB port can safely power and charge a lot of devices such as: MP3 players, mobile phones, and portable video game players. However, some devices such as GPS receivers and some cameras may not work and may even be damaged. Refer to the owner's guide for each device to determine its compatibility.

Motor loads not starting: Some appliances, particularly those with induction motors, require a much higher start-up surge than they do when running. Pumps, freezers and refrigerators (compressors) are the most common. The inverter may not be able to start some of these appliances even though their rated current draw is within the inverter's limits. If a motor-operated appliance refuses to start, observe the VOLTS indicator on the digital display while you are trying to start the appliance. If the display shows a battery drop below 22 volts while the inverter is trying to start the motor, this may explain why the appliance won't run. Make sure the length and diameter of the battery cables are appropriate. Check that the battery connections are good and that the battery is fully charged. If the cables are sized correctly, the connections are good, and the battery is charged, you may need a larger battery bank (see 'Loads turning on and off' below).

Loads turning off and on: If a load starts but quickly turns off, then the battery may not be able to deliver the necessary amperage to drive the load. If the battery bank cannot deliver the necessary amperage to drive a heavy load, the inverter will shut OFF due to low voltage (≤21.0 VDC). The battery

voltage can then slowly rise back above the low voltage reconnect voltage (23.6 VDC) causing the inverter to resume operation. As soon as the heavy load draws the batteries down, this cycle will continue unless the load is reduced or more batteries are added.

Loads too large: Although the CSW2024 inverter can provide high surge power up to two times the rated output power, some appliances may still trigger the inverter shutdown/protection system. In these instances, a higher power inverter may be required.

Running several loads at once: Sometimes the total surge requirement of all the loads is higher than the CSW2024 inverter can deliver. You may want to turn them on individually to ensure that the inverter does not have to deliver the starting current for all the loads at once.

3.2.3 Appliances and Run Time

The CSW2024 inverter can power a wide range of household appliances including small motors, hair dryers, clocks, and other electrical devices. As with any appliance using batteries for power, there is a certain length of time that it can run—this is called "run time." Table 3-2 below provides estimates of power consumption and run time for various appliances using a 12V-120AH battery bank.

Table 3-2, Appliance Power Consumption and Run Time

Load	Consumption	Estimated Run Time
Cordless Phone	5W	360 hrs
Clock/Radio	8W	270 hrs
Table Lamp	40W/60W	55 hrs/12 hrs
Freezer (8.8 cu ft)	80W	30 hrs
20" LCD TV	100W	23 hrs
Refrigerator (18 cu ft)	120W	18 hrs
Sump Pump (1/2 hp)	350W	6 hrs
Microwave (mid-size)	1000W	1 hr/38 min
Coffee Maker	1200W	1 hr/14 min

3.3 System Maintenance

Performing routine maintenance on the CSW2024 inverter and batteries can ensure your energy system remains in optimum operational condition.

Battery Charging

When possible, recharge your batteries when they are about 50% discharged or earlier. This gives them a much longer life cycle than recharging when they are almost completely discharged.

Inverter Maintenance

Some maintenance is required to keep the CSW2024 inverter operating properly. Periodically you should:

- Clean the exterior of the unit with a damp cloth to prevent the accumulation of dust and dirt.
- Tighten the nuts on the DC input terminals.

4.0 Troubleshooting

Use Tables 4-1 and 4-2 to troubleshoot any issues—Table 4-2 includes the error/warning codes that may appear on the inverter's digital display.

Table 4-1, Troubleshooting Guide

Problem	Symptom	Solution
No AC output. Status indicator and digital display are off.	The unit is off.	Turn on the inverter (see Operation instructions).
	No power to inverter.	Check if DC fuse or disconnect switch (if installed) is either blown or turned off.
No AC output. Status indicator is amber.	Check error code on display.	Verify the error condition and make necessary correction.
	GFCI was tripped.	Check the connected load and reset the GFCI.
AC output is turning off and on every few seconds.	The Load Sense function is enabled, and the inverter's connected load is less than the threshold setting (<10W).	Disable the Load Sense function by changing the inverter's setting, or increase the AC load connected to the inverter to >10W.

Table 4-2, Error Codes

Code	Condition	Corrective Action
E01	Unit has sensed the input voltage is low (<21.0 V) and has shut down.	Immediately recharge the battery (to at least 23.6 V), and then restart the unit.
E02	Unit has sensed the input voltage is high (≥31.0 V) and has shut down.	Check the battery voltage, or if an external charger is connected to the battery bank.
E03	Unit output has sensed an overload or short circuit, and has shut down.	Check the load connected to the output. Reduce the load and restart the unit.
E04	Unit has sensed the internal temperature was high and has shut down.	Turn the unit off and wait 15 minutes before restarting. Check for blocked air flow.
E05	Unit has sensed the input voltage is low and has initiated a warning alarm (@ 22.4 V).	The alarm will continue until the battery has been recharged to ≥23.6 V.
E06	Unit has sensed that the connected load is close to the overload shutdown limit.	Reduce the connected load.
E07	Unit has sensed the internal temperature is high and is close to the thermal shutdown limit.	Reduce the load and check if any of the unit's ventilation is blocked.

5.0 Specifications

Table 5-1, CSW2024 Specifications

Model	CSW2024
Electrical Specifications	
Continuous Power	2000W*
Surge Power (Peak)	4000W**
AC Output Voltage (25.0V)	120V RMS ± 5%
AC Output Current	16.7A
AC Output Voltage Range	104-127V
AC Output Frequency	60Hz ± 0.5Hz
AC Output Waveform	Pure sine wave (<3% THD)
AC Output Receptacle	NEMA 5-20, Dual GFCI with LED indicator
Optimum Efficiency	>90%
DC Input Voltage (Nominal)	25.0V
No Load Battery Draw	<0.6A (LS off), <0.1A (LS on)
DC Operation Voltage Range	21.0 – 31.0V***
DC Input Current (Full Load)	95A
DC Input Current (No Load)	<0.8A
DC Output (USB port)	5V, 2.1A
Protection	
Low Voltage Alarm	22.4V
Low Voltage Shutdown	21.0V
Low Voltage Recovery	23.6V
High Voltage Shutdown	31.0V***
Output Warning/Shutdown	Yes
Temp Warning/Shutdown	Yes
Load Sense	
ON Threshold	<10W
OFF Threshold	<3W
Display Specifications	
LED Status Indicator	Yes (Power, Fault)
Digital display	Input voltage, output power, error codes
General Specifications	
Operating Temperature	32° F to 104° F (0° C to 40° C)
Inverter Weight	11.5 lb (5.2 kg)
Shipping Weight	13.0 Lb (5.9 kg)
Inverter Size (L x W x H)	15.0 x 9.1 x 4.3” (38.1 x 23.0 x 11.0 cm)
Shipping Size (L x W x H)	19.25 x 11.5 x 6.25” (48.9 x 29.2 x 15.9 cm)
Warranty	One Year
Regulatory Approval	
Conforms to UL STD 458, Certified to CSA STD C22.2 No. 107.1	

** – Specs met when DC voltage at nominal (25.0V) & temp at 77°F (25°C).*

*** – Surge ratings are based on resistive load (output voltage may drop).*

**** – Damage can occur if input voltage exceeds 32 VDC.*

DMX Power

www.DMX-Power.com

64-0090 C Owner's Manual CSW2024