MAGNUM ENERGY

MSH-RV Series

Pure Sine Wave Inverter/Charger

Owner's Manual

MAGNASINE HYBRID™ MAGNUM ENERGY

DMX POWER

Disclaimer of Liability

The use of this manual and the conditions or methods of installation, operation, use, and maintenance of the MSH3012RV inverter/charger is beyond the control of DMX Power. Therefore, this company does not assume responsibility and expressly disclaims liability for loss, damage, or expense whether direct, indirect, consequential or incidental that may arise out of or be any way connected with such installation, operation, use, or maintenance.

Due to continuous improvements and product updates, the images shown in this manual may not exactly match the unit purchased.

Restrictions on Use

The MSH3012RV inverter/charger may only be used in life support devices and systems with the express written approval of DMX Power. Failure of this inverter can reasonably be expected to cause failure of that life support device or system, or to affect the safety or effectiveness of that device or system. If the MSH3012RV inverter/charger fails, it is reasonable to assume the health of the user or other persons may be endangered.

Copyright Notice

Copyright 2026 by DMX Power. All rights reserved. Permission to copy, distribute, and/or modify this document is prohibited without express written permission from DMX Power.

Document Information

Description – MSH3012RV Owner's Manual
Part Number and Revision – 64-0089 Rev F
Date Published – July 2026

For the latest version of DMX documentation including this manual see the documentation menu on our website at: www.dmx-power.com

Contact Information

DMX Power
Phone (Toll-Free): 800-553-6418 or 651-653-7000
Technical Questions: support@dmx-power.com
Warranty or RMA: warranty@dmx-power.com
Web: www.dmx-power.com

Statement of Appreciation

Thank you from all of us at DMX Power for purchasing this MSH3012RV inverter/charger.

At DMX Power, we are committed to providing you with quality products and services, and hope that your experience with us is pleasant and professional.

Record unit's model & serial number in case you need to provide this information in the future.		
Model:		
☐	MSH3012RV	

IMPORTANT SAFETY INSTRUCTIONS
SAVE THESE INSTRUCTIONS

THIS MANUAL CONTAINS IMPORTANT INSTRUCTIONS FOR THE MSH3012RV INVERTER/CHARGER THAT SHALL BE FOLLOWED DURING THE INSTALLATION AND OPERATION OF THIS PRODUCT. Before using the MSH3012RV inverter, read all instructions and cautionary markings. Also, be sure to review the individual manuals provided for each component of the system. The installation instructions are for use by qualified personnel only. Do not perform any installation or servicing other than that specified in this owner's manual unless you are qualified to do so. Incorrect installation or servicing may result in a risk of electric shock, fire, or other safety hazard.

Safety Symbols

The following safety symbols have been placed throughout this manual to indicate dangerous and important safety instructions.

WARNING: This symbol indicates that failure to take a specified action could result in physical harm to the user.

CAUTION: This symbol indicates that failure to take a specified action could result in damage to the equipment.

Info: This symbol indicates information that emphasizes or supplements important points of the main text.

Safety Precautions

All electrical work must be performed in accordance with local and national electrical codes.

- This product is designed for indoor/compartment installation. It must not be exposed to rain, snow, moisture, or liquids of any type.
- Use insulated tools to reduce the chance of electrical shock or accidental short circuits.
- There are no user-serviceable parts contained in this product.
- This unit is provided with integral protection against overloads.
- Live power may be present at more than one point since an inverter utilizes both DC (batteries, PV, etc.,) and AC (shorepower or generator) power. To reduce risk of electric shock, ensure all DC and AC wiring is disconnected prior to installing or performing maintenance on the inverter. Turning off the inverter will not reduce this risk, the inverter must be totally disconnected from all sources.
- Use Class 1 wiring methods for field wiring connections to terminals of a Class 2 circuit.
- Listed or labeled equipment shall be installed and used in accordance with any instructions included in the listing or labeling.
- Always verify proper wiring prior to starting the inverter.
- Use only copper wires with a minimum temperature rating of 167°F (75°C).
- AC wiring must be no less than #8 AWG (8.36 mm²) on the inverter's input and no less than #6 AWG (13.3 mm²) on the inverter's output to allow the full current capacity of this inverter.
- Battery cables should be no less than #4/0 AWG (107.2 mm²). Crimped and sealed copper ring terminal lugs with a 5/16 hole should be used to connect to the DC terminals on the inverter.
- Torque all AC wiring connections and DC cable connections to the required torque values.
- The inverter must be properly mounted, see Section 2.2 "Mounting the Inverter" in this manual.
- Overcurrent protection for the battery supply is <u>not</u> provided as an integral part of this inverter. Overcurrent protection of the battery cables <u>must</u> be provided as part of the system installation. Refer to Section 2.4 "DC Wiring" for more information.
- Overcurrent protection for the AC output wiring is <u>not</u> provided as an integral part of this inverter. Overcurrent protection of the AC output wiring <u>must</u> be provided as part of the system installation. Refer to Section 2.5 "AC Wiring" for more information.

- The AC output neutral conductor and the DC negative conductors are not connected (bonded) to the inverter chassis. Both the input and output conductors are isolated from the enclosure and each other. System grounding, if required, is the responsibility of the system installer and must comply with local and national electrical codes and standards. Refer to the Section 2.6 "Grounding Inverters" for more information.

Battery Safety

- Use insulated tools and be very careful when working around batteries, they can produce extremely high currents if short-circuited (e.g., dropping a metal tool across the battery terminal), which could cause a fire or explosion.
- Read and follow the battery manufacturer's safety precautions before installing the inverter and batteries. Always verify proper polarity and voltage before connecting the batteries to the inverter. Once the batteries are connected to the inverter, ensure the maintenance and charging requirements (i.e., charge voltage and charge rate) provided by the battery manufacturer are followed to extend the life of the batteries and to prevent damage to the batteries while charging.
- Wear eye protection such as safety glasses, and avoid touching your eyes and face when working with batteries to keep any fluid/corrosion on the battery from coming in contact with eyes and skin. Have plenty of fresh water and soap nearby and thoroughly wash in case battery acid contacts skin, clothing, or eyes. In the event of exposure to the eyes, flood them for at least 15 minutes with running water and seek immediate medical attention. Baking soda neutralizes lead acid battery electrolyte and vinegar neutralizes spilled NiCad and NiFe battery electrolyte; depending on your battery type, keep a supply on hand near the batteries.
- Remove all jewelry such as rings, watches, bracelets, etc., when installing or performing maintenance on the batteries and inverter. A battery can produce a short-circuit current high enough to weld metal jewelry, causing severe burns.
- Never work alone. Always have someone within the range of your voice or close enough to come to your aid when working around batteries.
- Use proper lifting techniques when working with batteries.
- Never use old or untested batteries. Check each battery's label for age, type, and date code to ensure all batteries are identical.
- Batteries are sensitive to changes in temperature. Install batteries in a stable environment.
- Batteries can produce explosive gasses, so install batteries in a well-ventilated area. For compartment or enclosure installations, always vent batteries from the highest point to the outside. Design the battery enclosure to prevent accumulation and concentration of hydrogen gas in pockets at the top of the compartment.
- Provide at least one inch of air space between batteries to provide optimum cooling.
- Never smoke or allow a spark near batteries.
- To prevent a spark at the battery and to reduce the chance of explosion, always first connect the cables to the batteries. Then connect the cables to the inverter.
- Never charge a frozen battery.
- The battery bank should be installed in a clean, dry, ventilated environment that is protected from high and low temperatures. When installed in a RV, the batteries must be mounted upright (if using liquid batteries) and securely fastened. The location must be fully accessible and protected from exposure to heat producing devices, and away from any fuel tanks.
- The converter/inverter is intended to recharge batteries. The battery that is connected to this product is only suitable if it complies with the given battery standard for that battery type and is provided with a battery management system that will monitor and control the electrical and thermal health of the battery during charging. When installing this converter/inverter, the battery is to be verified as in compliance with the applicable battery standard.

CONSIGNES DE SÉCURITÉ IMPORTANTES

CONSERVER CES INSTRUCTIONS

CE MANUEL CONTIENT DE IMPORTANTES POUR LA SÉRIE MSH3012RV ONDULEUR/CHARGEUR QUI DOIVENT ETRE SUIVIES PENDANT L'INSTALLATION ET FONCTIONNEMENT DE CE PRODUIT. Avant d'utiliser la série MSH3012RV, lire toutes les instructions etles mises en garde. Aussi, n'oubliez pas depasser en revue les différents manuels fournispour chaque composant du système. Lesinstructions d'installation sont pour une utilisationpar du personnel qualifié. Ne pas effectuer une installation ou d'entretien autres que ceux spécifiés dans ce manuel, sauf si vous êtes qualifié pour le faire. Une mauvaise installation ou d'entretien peut entraîner un risque de choc électrique, un incendie ou autre danger pour la sécurité.

Symboles de sécurité

Les symboles de sécurité suivants ont été placéstout au long de ce manuel pour indiquer des conditions dangereuses et les consignes de sécurité importantes.

AVERTISSEMENT: Ce symbole indique que le défaut de prendre une action spécifiée pourraitcauser des dommages physiques à l'utilisateur.

ATTENTION: Ce symbole indique que le défaut de prendre une action spécifiée peut entraîner des dommages à l'équipement.

Info: Ce symbole indique une information qui met l'accent ou des suppléments points importants du texte principal.

Consignes de sécurité

- Tous les travaux électriques doivent être effectués en conformité avec les codes locaux et nationaux électriques.
- Ce produit est conçu pour l'installation / du compartiment intérieur. Il ne doit pas être exposé à la pluie, la neige, l'humidité ou des liquides de tout type.
- Utiliser des outils isolés pour réduire le risque de choc électrique ou courts-circuits accidentels.
- Il n'y a pas réparable par l'utilisateur contenues dans ce produit.
- Cet appareil est fourni avec une protection intégrale contre les surcharges.
- Puissance en direct peuvent être présents à plus d'un point depuis un onduleur utilise à la fois DC (piles, PV, etc) et AC (utilitaire ou générateur) d'alimentation. Pour réduire le risque de choc électrique, assurez-vous que tout le câblage DC et AC est débranchée avant l'installation ou la maintenance sur le variateur. Mise hors tension de l'onduleur ne réduira pas ce risque, l'onduleur doit être totalement déconnectée de toutes les sources.
- Utiliser des méthodes de câblage classe 1 pour les connexions de câblage sur le terrain aux bornes d'un circuit de Classe 2.
- Coté ou étiquetés équipement doit être installé et utilisé conformément aux instructions figurant dans la liste ou l'étiquetage.
- Toujours vérifier le câblage avant de commencer l'onduleur.
- Utilisez des fils de cuivre seulement avec une cote de température minimale de 75°C (167°F).
- Le câblage CA ne doit pas être inférieur à 8 AWG (8,36 mm²) à l'entrée de l'onduleur et à au moins 6 AWG (13,3 mm²) de la sortie de l'onduleur pour permettre la maximale capacité courant de l'onduleur.
- Les câbles de batterie ne doit ps être inférieur à #4/0 AWG. Frisées et scellé cosses en cuivre anneau des bornes avec un trou de 5/16 doit être utilisé pour se connecter à des bornes de courant continu sur l'onduleur.
- Couple toutes les connexions de câblage ca et les connexions de câbles à courant continu à des valeurs de couple nécessaires.
- L'onduleur doit être correctement installé, voir la section 2.2 "Montage de l'onduleur" dans ce manuel.
- Protection contre les surintensités pour l'alimentation de la batterie n'est pas fourni en tant que partie intégrante de cet inverseur. La protection contre les surintensités des câbles de batterie doivent être fournis dans le cadre de l'installation du système. Reportez-vous à la section Câblage cc dans le chapitre d'installation pour plus d'informations.

- Protection contre les surintensités pour le câblage de sortie AC n'est pas fourni en tant que partie intégrante de cet onduleur. Protection contre les surintensités du câblage de sortie CA doit être fournie dans le cadre de l'installation du système. Reportez-vous à la section Câblage ca dans le chapitre d'installation pour plus d'informations.
- Le conducteur de sortie CA conducteurs neutre et continue négative ne sont pas connectés (servitude) au châssis inverseur. La fois l'entrée et des conducteurs de sortie sont isolés de l'enceinte et l'autre. La terre du système, si nécessaire, est de la responsabilité de l'installateur du système et doit se conformer à des codes locaux et nationaux et les normes électriques. Reportez-vous à la section Mise à la terre Onduleurs dans le chapitre d'installation pour plus d'informations.

Sécurité de la batterie

- Utiliser des outils isolés et être très prudent lorsque vous travaillez près des batteries, elles peuvent produire des courants extrêmement élevés si en court-circuit (par exemple, échapper un outil métallique à travers la borne de la batterie), ce qui pourrait provoquer un incendie ou une explosion.
- Lisez et suivez les consignes de sécurité du fabricant de la batterie avant d'installer l'onduleur et des batteries. Toujours vérifier la polarité et la tension avant de brancher les batteries à l'onduleur. Une fois que les batteries sont connectées à l'onduleur, assurer la maintenance et les exigences de charge (c.-à-tension de charge et taux de charge) fournis par le fabricant de la batterie sont suivies pour prolonger la vie des batteries et pour éviter d'endommager les batteries pendant la charge.
- Porter des lunettes de protection tels que des lunettes de sécurité, et évitez de toucher vos yeux et le visage lorsque l'on travaille avec des piles de garder tout fluide / corrosion sur la batterie d'entrer en contact avec les yeux et la peau. Ayez suffisamment d'eau fraîche et de savon à proximité et se laver dans le cas d'acide contact avec la peau de la batterie, les vêtements ou les yeux. Dans le cas d'exposition pour les yeux, les inonder pendant au moins 15 minutes à l'eau courante et consulter immédiatement un médecin.Le bicarbonate de soude neutralise l'acide de plomb électrolyte de la batterie et le vinaigre neutralise renversé NiCad et NiFe batterie à électrolyte; en fonction de votre type de batterie, gardez sous la main près des batteries.
- Enlevez tous les bijoux tels que bagues, montres, bracelets, etc, lors de l'installation ou la maintenance sur les batteries et l'onduleur. Une batterie peut produire un court-circuit assez de courant élevé pour souder les bijoux en métal, provoquant de graves brûlures.
- Ne jamais travailler seul. Toujours avoir quelqu'un au sein de la gamme de votre voix ou suffisamment près pour vous venir en aide lorsque vous travaillez près des batteries.
- Utiliser des techniques de levage appropriées lorsque vous travaillez avec des piles.
- Ne jamais utiliser de piles usagées ou non testés. Vérifiez l'étiquette de chaque batterie à l'âge, le type et le code de date afin d'assurer toutes les batteries sont identiques.
- Batteries sensibles aux changements de température. Toujours installer dans un environnement stable.
- Les batteries peuvent produire des gaz explosifs, etc installer les piles dans un endroit bien ventilé. Pour les installations compartiment ou une enceinte, toujours évacuer les piles du plus haut point à l'extérieur. Concevoir le boîtier de piles pour éviter l'accumulation et la concentration de gaz d'hydrogène dans "poches" en haut du compartiment.
- Fournir au moins un pouce de l'espace aérien entre les batteries pour fournir un refroidissement optimal.
- Ne jamais fumer ou laisser une étincelle près des batteries.
- Pour éviter une étincelle à la batterie et de réduire le risque d'explosion, toujours connecter les câbles aux batteries en premier. Ensuite, connectez les câbles à l'onduleur.
- Ne jamais charger une batterie gelée.
- La banque de la batterie doit être installé dans un endroit propre, sec, aéré et où ils sont protégés contre les températures élevées et basses. S'il est installé dans un véhicule / bateau, les batteries doivent être monté en position verticale (si vous utilisez des piles liquides) et solidement fixés. L'emplacement doit être pleinement accessible et protégé contre l'exposition à la chaleur la fabrication de dispositifs, et loin de toute réservoirs de carburant.
- Le convertisseur/onduleur est destiné à recharger les batteries. La batterie connectée à ce produit ne convient que si elle est conforme à la norme de batterie donnée pour ce type de batterie et est fournie avec un système de gestion de batterie qui surveillera et contrôlera la santé électrique et thermique de la batterie pendant la charge. Lors de l'installation de ce convertisseur/onduleur, la batterie doit être vérifiée comme étant conforme à la norme de batterie applicable.

Table of Contents

1.0 Introduction 1
1.1 How the MSH3012RV Inverter/Charger Works 2
1.2 Advantages of using a Pure Sine Wave Inverter 2
1.3 Features and Benefits 3
2.0 Installation 6
2.1 Pre-Installation 6
2.1.1 Unpacking and Inspection 6
2.1.2 Required Tools and Materials 6
2.1.3 Locating the Inverter 8
2.2 Mounting the Inverter 9
2.3 Wiring the Inverter – General Requirements 11
2.3.1 Protecting Wire – Conduit Box 11
2.3.2 Wiring Requirements 11
2.3.3 Wire Routing 11
2.3.4 Torque Requirements 11
2.4 DC Wiring 12
2.4.1 DC Wire Sizing 14
2.4.2 DC Overcurrent Protection 14
2.4.3 DC Cable Connections 15
2.4.4 Wiring the DC Overcurrent Protection Device 16
2.4.5 Wiring the Battery Bank 16
2.4.6 Optional Battery Temperature Sensor Installation and Wiring 17
2.4.7 Wiring the Inverter to the Battery Bank 18
2.5 AC Wiring 19
2.5.1 Pre-AC Wiring Requirements 19
2.5.2 AC Wire Size and Overcurrent Protection 19
2.5.3 Recommended GFCI (Ground Fault Circuit Interruption) Outlets 20
2.5.4 AC Terminal Block Connections 20
2.5.5 AC Conductor Wiring 21
2.5.6 AC Wiring Configurations 22
2.6 Grounding Inverters 26
2.6.1 Equipment Grounding Conductors 27
2.6.2 Grounding Electrode Conductors 27
2.6.3 System Bonding Jumpers 27
2.6.4 Neutral to Safety Ground Bonding 28
2.7 Inverter Warning Label 29
2.8 RV-C Communication Connection Port 29
2.9 Final Inspection 30
2.10 Functional Test 31
3.0 Operation 32
3.1 Inverter Mode 32
3.2 Standby Mode 33
3.2.1 Battery Charging 34
3.2.2 Transfer 35
3.2.3 Load Support 36
3.3 Current Flow 37

Table of Contents (Continued)

3.4 Battery Temperature Sensor Operation 39
3.5 Protection Circuitry Operation 40
3.6 Inverter Startup 41
3.7 Factory Default Values 42
3.8 Using the RV-C Connector 43
3.8.1 LED Indicator 43
3.9 Conditions for Saving (Non-Default) Settings 44
3.10 Assigning Addresses to the MSH3012RV Inverter 44
3.10.1 Assigning Address #2 to the MSH3012RV Inverter 44
3.11 Troubleshooting the RV-C Port 44
3.12 Inverter Fan Operation 45
3.13 Using a Remote with the MSH3012RV Inverter 45

4.0 Troubleshooting 46

4.1 Troubleshooting Chart 46
4.2 Resetting the Inverter 48
4.2.1 Performing an Inverter Reset 48
4.2.2 Performing a Power Reset 48

Appendix A – Specifications and Optional Equipment 49

A-1 Inverter/Charger Specifications 49
A-2 Inverter Charts 50
A-2.1 Inverter Efficiency 50
A-2.2 Temperature and Inverter Output 50
A-2.3 Temperature and Charger Output 51
A-3 Inverter AC Fault Current 51
A-4 Optional Equipment and Accessories 51

Appendix B – Battery Information 52

B-1 Battery Location 52
B-2 Battery Types 52
B-3 Battery Temperature 52
B-4 Battery Bank Sizing 52
B-5 Battery Bank Sizing Worksheet 53
B-6 Battery Wiring Configurations 54
B-6.1 Series Wiring 54
B-6.2 Parallel Wiring 54
B-6.3 Series-Parallel Wiring 54

Appendix C – Power Consumption and Output Waveforms 56

C-1 Appliance Power Consumption 56
C-2 Inverter Output Waveforms 56

Appendix D – Inverter/Charger Terminology 57

List of Figures

Figure 1-1, Power Switch, Status LED, and Accessory Connection Ports 3
Figure 1-2, Electrical Connection Points 4
Figure 1-3, Left Side Features 5
Figure 2-1, Simplified Installation Diagram 7
Figure 2-2, Approved Mounting Positions 9
Figure 2-3, MSH3012RV Dimensions and Side References 10
Figure 2-4, DC and Battery Temperature Sensor Wiring 13
Figure 2-5, Battery Hardware Installation 15
Figure 2-6, Inverter DC Hardware Installation 15
Figure 2-7, Optional Battery Temperature Sensor 17
Figure 2-8, MSH3012RV AC Terminal Block 20
Figure 2-9, AC Wiring for Single In – Single Out Configurations 23
Figure 2-10, AC Wiring for Dual In – Single Out Configurations 24
Figure 2-11, AC Wiring for Dual In – Dual Out Configurations 25
Figure 2-12, Grounding System for MSH3012RV 26
Figure 2-13, Neutral-to-Ground Connection (Inverter Mode) 28
Figure 2-14, Neutral-to-Ground Connection (Standby Mode) 28
Figure 2-15, Warning Label 29
Figure 2-16, RV-C Connections (Single Inverter with Accessories) 29
Figure 2-17, RV-C Connections (Two Inverters with Accessories) 30
Figure 2-18, RV-C Connector/Plug Designation 30
Figure 2-19, AC Voltage Checks 31
Figure 3-1, Power Flow – Inverter Mode 32
Figure 3-2, Power Flow – Standby Mode (Single In) 33
Figure 3-3, Power Flow – Standby Mode (Dual In) 33
Figure 3-4, Automatic 4-Stage Charging Graph 35
Figure 3-5, MSH3012RV Current Flow – Inverting 37
Figure 3-6, MSH3012RV Current Flow – Charging and AC Pass-thru 37
Figure 3-7, MSH3012RV Current Flow – Charger Back-off 37
Figure 3-8, MSH3012RV Current Flow – Load Support AAC 38
Figure 3-9, MSH3012RV Current Flow – Load Support VDC 38
Figure 3-10, BTS Temperature to Charge Voltage Change 39
Figure 3-11, Power Switch and Status Indicator 41
Figure 3-12, RV-C Port Status Indicator 43
Figure 4-1, Performing an Inverter Reset 48
Figure A-1, MSH3012RV Efficiency Chart 50
Figure A-2, Temperature to Continuous Inverter Output Power 50
Figure A-3, Temperature to Continuous Charger Output Current 51
Figure B-1, Series Battery Wiring 54
Figure B-2, Parallel Battery Wiring 54
Figure B-3, Series-Parallel Battery Wiring 54
Figure B-4, Battery Bank Wiring Examples (12-volt) 55
Figure C-1, AC Waveforms 56

List of Tables

Table 2-1, Recommended DC Wire/Overcurrent Device for Rated Use 14
Table 2-2, DC Wire Size For Increased Distance 15
Table 2-3, AC Input/Output Wiring Configurations 22
Table 2-4, Equipment Grounding Conductor Sizing 27
Table 3-1, Inverter Battery Turn On/Off Levels.....40
Table 3-2, Inverter/Charger Default Values 42
Table 3-3, Operating Status For RV-C Port.....43
Table 3-4, Inverter Compatibility Level 45
Table 4-1, MSH3012RV Inverter/Charger Troubleshooting.....46
Table A-1, AC Output Fault Current - Inverter Mode.....51
Table C-1, Typical Appliance Power Consumption 56

1.0 Introduction

Congratulations on your purchase of a MSH3012RV inverter/charger from DMX Power. The MSH3012RV is designed especially for RV applications; it is a "hybrid" pure sine wave inverter and includes a RV-C connector to allow RV OEM's an easy way to multiplex with this inverter.

Why is the MSH3012RV a "Hybrid"? Most inverters only use one source of energy to power the inverter loads—either from the incoming AC power (i.e., shorepower or generator) or from the batteries. The MSH3012RV combines the energy from both the AC input and the batteries to power the inverter loads. This feature gives the inverter the ability to recharge the battery when there is surplus power, or to deliver more power to the loads if they require more than the AC input can supply by itself.

Info: This is a sizable manual and much of it is fairly technical. Terms may be used throughout the manual that are unfamiliar to you. Refer to the Inverter/Charger Terminology glossary in Appendix D for clarification.

The MSH3012RV inverter/charger includes the following:

- A 3000w/12v model in a small installation footprint
- Pure sine wave output
- Automatic PFC (Power Factor Corrected) multi-stage battery charging
- RS485 standard communication protocol
- Inverter-mounted ON/OFF switch with LED indicator
- Each input has 50-amp AC capability with intelligent AC input transfer
- Field serviceable for qualified personnel—tested repair kits available
- Automatic battery temperature compensation (when using the Battery Temperature Sensor) for optimum charging even during extreme temperature changes
- Overcurrent, over-temperature, and high/low battery voltage protection
- RV-C connector and protocol to communicate on a RV-C network bus/backbone
- Non-volatile memory for settings

The following accessories are also available for use with the MSH3012RV inverter/charger:

- **ME-AGS-N** (Automatic Generator Start Module – Network version) – automatically starts/ stops your generator.
- **ME-ARC50** (Advanced Remote Control) – easy to read LCD display panel that allows advanced inverter set up, control, and troubleshooting.
- **ME-BMK** (Battery Monitor Kit w/ Shunt) – provides precise DC voltage/current measurements and information on your battery's State of Charge (SOC) condition.
- **ME-RC50** (Standard Remote Control) – easy to read LCD display panel that allows standard inverter set up, control, and troubleshooting.

Regulatory Compliance

The MSH3012RV inverter/charger is designated as a Standalone power inverter with an internal battery charger. It can be connected to a utility grid (i.e., shorepower) or to a generator to allow the inverter batteries to be charged, and to power inverter loads while connected. The MSH3012RV is not a grid-interactive (also known as utility-interactive) inverter and does not have the capability to export (or sell) power back into the utility grid.

The MSH3012RV is intended for RV use. It has been tested and listed to UL 458, 5th Edition (Power Converters/Inverters and Power Converter/Inverter Systems for Land Vehicles and Marine Crafts) for use in the US; and is also certified to CSA C22.2 No. 107.1-01 (General Use Power Supplies) for use in Canada. It has been tested and certified to these product safety standards by Intertek Testing Services (known as ETL), which is a Nationally Recognized Testing Laboratory (NRTL). Organizations that are designated as a NRTL are qualified to meet Occupational Safety and Health Administration (OSHA) regulations to perform independent safety testing and product certification.

1.1 How the MSH3012RV Inverter/Charger Works

There are two main modes of operation associated with the MSH3012RV inverter/charger:

- **Inverter Mode**:
  When the inverter is properly connected to batteries and turned on, the direct current (DC) from the batteries is transformed into a pure sine wave alternating current (AC). This AC is similar to the voltage provided by your utility and is used to power any electrical appliances (i.e., AC loads) connected to the inverter's output.
- **Standby Mode**:
  When an external source of AC power (i.e., shorepower or generator) is connected and qualified on the inverter's AC input, it operates in Standby mode. In Standby mode, an internal AC transfer relay automatically closes to pass the incoming AC power directly to the inverter's output to continue powering the connected electrical appliances. The unit is also monitoring the AC input and "standing-by" to switch to Inverter mode if the unit detects a power failure (or low AC voltage). While in the Standby mode, the unit can operate:

  a) as a battery charger, which converts the incoming AC power into DC power to recharge the batteries; or

  b) in load support, when the incoming AC source is not large enough to power the inverter loads by itself, additional current from the battery is provided to help power the inverter loads.

1.2 Advantages of using a Pure Sine Wave Inverter

Today's inverters come in three basic output waveforms: square wave, modified sine wave (which is actually a modified square wave), and pure sine wave (see Figure C-1 in Appendix C). Modified sine wave inverters approximate a pure sine wave form and will run most appliances (see also Section C-1 "Appliances and Run Time" in Appendix C) and electronics without any problems. These inverters are less expensive, and therefore, offer a viable alternative to more expensive pure sine inverters.

The output of the MSH3012RV, which is a pure sine wave inverter, is equal to or in many cases, better than shorepower. Virtually any electronic device will operate from a pure sine wave inverter. Motors run cooler, microwaves usually cook faster, and clocks keep better time just to name a few examples. Without compromising quality or performance, the MagnaSine Hybrid provides you with all the advantages of a pure sine wave inverter at a much lower cost than many on the market.

The MSH3012RV is built on the same platform as our popular ME Series modified sine wave inverters—allowing for an easy upgrade to a pure sine wave inverter from the original ME Series installation. This standard platform also helps reduce cost by using standard parts/accessories across many models. Magnum accessories such as the Advanced Remote Control (ME-ARC), Standard Remote Control (ME-RC), Automatic Generator Start – Networked (ME-AGS-N), and Battery Monitor Kit (ME-BMK) can be used—see Section A-4 "Optional Equipment and Accessories" for more information on these products.

1.3 Features and Benefits

The MSH3012RV inverter/charger is designed to allow easy access to wiring, circuit breakers, and controls. Its die cast baseplate with one-piece aluminum cover ensures maximum durability with minimum weight, as well as cooler, more efficient operation.

The bottom of the MSH3012RV is equipped with the following features (Figures 1-1 and 1-2):

1. **Power ON/OFF Switch** – a momentary pushbutton switch that alternately turns the inverter on or off.

2. **Status LED Indicator** – this green LED illuminates to provide status information on inverter or charger operation.

3. **Accessories Connection Port (red label)** – a RJ11 port that accepts optional pigtail accessories (red-labeled).
   Note: *The MSH3012RV does not have the ability to be stacked.*

4. **RV-C Status LED** – this yellow LED is used to determine the RV-C connection's status. See Section 3.8 for additional information.

5. **RV-C Connection Port (white label)** – an electrically isolated CAN communication port that allows RV-C control of the features and settings in the inverter and in any optional network capable Magnum accessories (i.e., Auto Gen Start or Battery Monitor). See Section 2.8 for more information.
   Note: *If using the RV-C connector port, do not connect a remote control. The MSH3012RV inverter will only communicate with the remote control if connected.*

6. **Network Connection Port (green label)** – a RJ11 port that allows Magnum network accessories (blue or green labeled) or a remote control to be connected.
   Note: *If using a remote control, you can NOT use the RV-C connector port. The MSH3012RV inverter will only communicate with the remote control if connected.*

7. **Battery Temperature Sensor Port (yellow label)** – a RJ11 port that accepts the remote Battery Temperature Sensor (BTS).

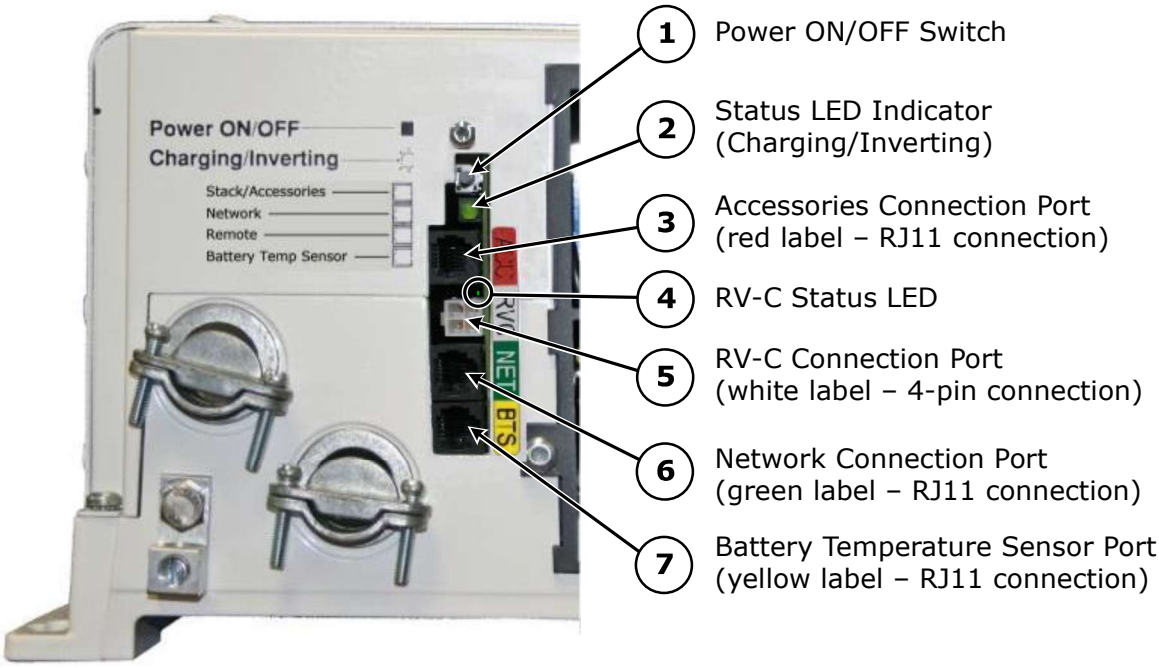

Figure 1-1, Power Switch, Status LED, and Accessory Connection Ports

8 **DC Equipment Ground Terminal** – this connection is used to tie the exposed chassis of the inverter to the DC grounding system. This terminal accepts CU/AL conductors from #14 to #2 AWG (2.1 to 33.6 mm^2).

9 **AC Entry/Exit Connections** – two 3/4" knockouts provided with cable-clamp strain reliefs to accommodate and secure the AC input and output field wiring.

10 **Intake Air Vents** – ventilation openings to pull in air to help keep the inverter cool for peak performance. The intake air vents are located on the front side and at the front on the right side; also see Figure 2-3 for the location of the air vents.

11 **Positive DC Terminal** – provides a 360 degree connection point for the positive (+) cable from the battery bank; consists of a 5/16-18 bolt with a Kep or Flange nut that holds the battery cable to the DC terminal.

12 **Negative DC Terminal** – provides a 360 degree connection point for the negative (-) cable from the battery bank; consists of a 5/16-18 bolt with a Kep or Flange nut that holds the battery cable to the DC terminal.

13 **Mounting Flange** – used to secure the inverter to a shelf or wall.

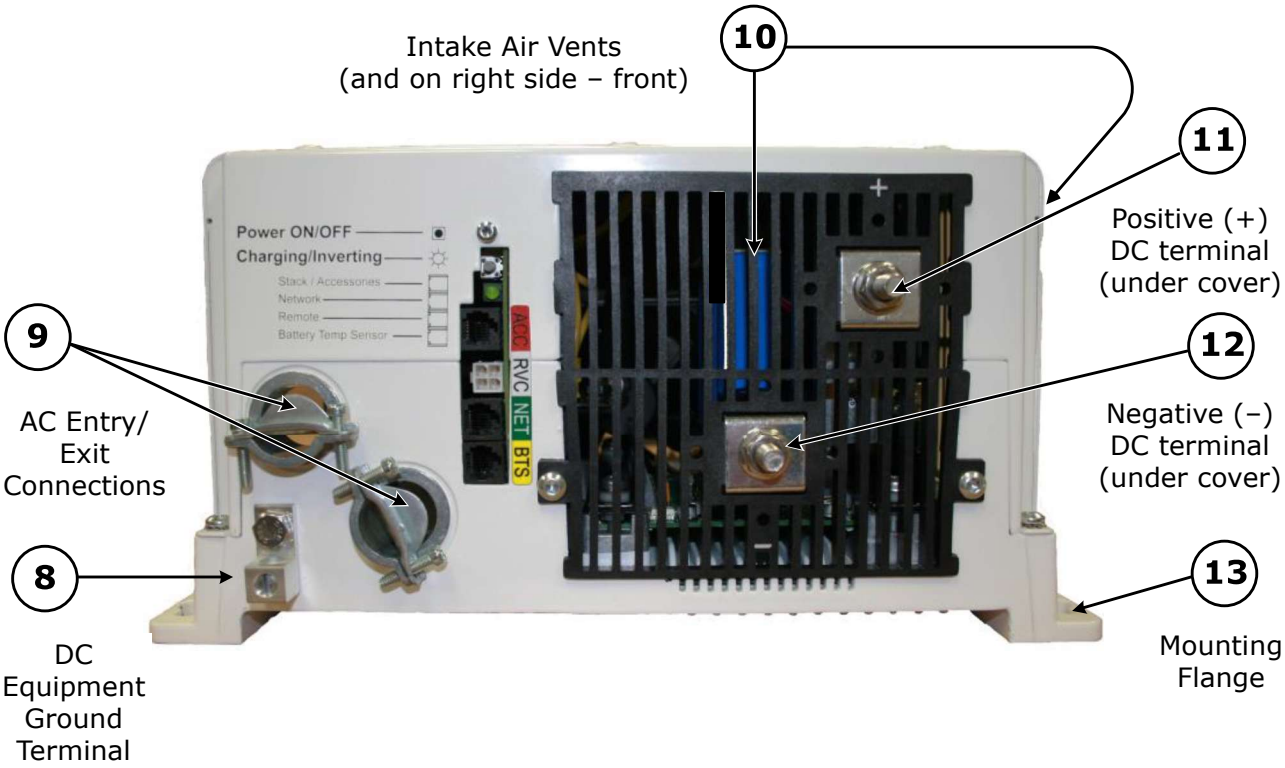

Figure 1-2, Electrical Connection Points

The MSH3012RV inverter's left side is equipped with the following features (Figure 1-3):

14 **Exhaust Air Vents** – ventilation openings that allow heated air to be removed by the internal cooling fan. The exhaust air vents are located on the back side and at the rear on the right side; also see Figure 2-3 for the location of the air vents.

15 **Model/Serial Number Label** – includes model/serial number information, date of manufacture, and inverter and charger specifications. See the MSH3012RV specifications in Appendix A for more information.

16 **AC Access Cover** – provides access to the internal AC wiring terminal block (Figure 2-8). This terminal block is used to hardwire all inverter AC input and output wiring connections. Remove the two screws to access the AC wiring terminal block.

17 **AC Input Circuit Breakers (CB1 & CB2)** – these two 50-amp AC circuit breakers protect the unit's internal charger wiring and pass-thru relay while in Standby mode. These circuit breakers pop out when they open—press in to reset. The input circuit breakers are not branch-rated—additional breakers that are branch-rated must be installed in the inverter's input wiring.

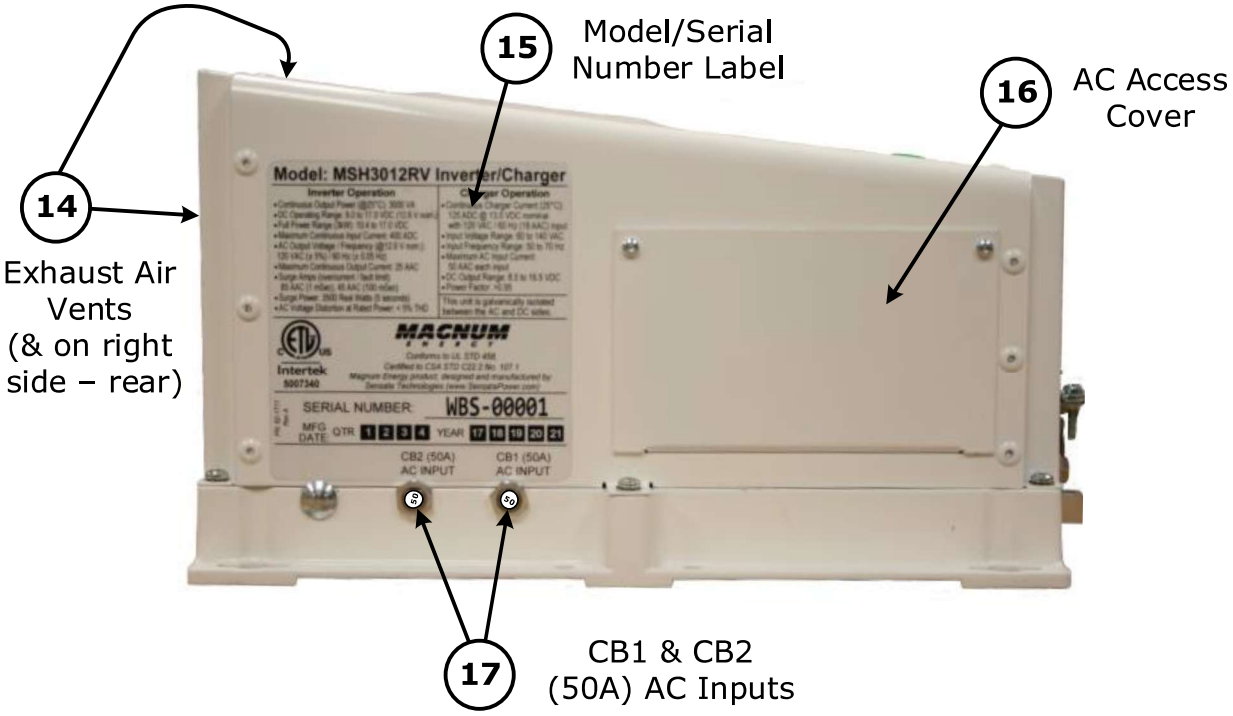

Figure 1-3, Left Side Features

2.0 Installation

WARNING: Installations should be performed by qualified personnel, such as a licensed or certified electrician. It is the installer's responsibility to determine which safety codes apply and to ensure that all applicable installation requirements are followed. Applicable installation codes vary depending on the specific location and application of the installation.

CAUTION: Review the "Important Product Safety Information" on pages iii-vi before any installation.

CAUTION: The inverter is heavy. Use proper lifting techniques during installation to prevent personal injury.

The simplified system diagram shown in Figure 2-1 should be reviewed to assist you in planning and designing your installation. This drawing is not intended to override or to restrict any national or local electrical codes. This drawing should not be the determining factor as to whether the installation is compliant, that is the responsibility of the electrician and the on-site inspector.

2.1 Pre-Installation

Before proceeding, read the entire Installation section to determine how best to install your MSH3012RV inverter/charger. The more thorough you plan in the beginning, the better your inverter needs will be met.

2.1.1 Unpacking and Inspection

Carefully remove the MSH3012RV inverter/charger from its shipping container and inspect all contents. Verify the following items are included:

- MSH3012RV inverter/charger
- Red and black DC terminal covers with Phillips screws
- AC access cover with two Phillips screws
- Two 5/16" Kep or Flange nuts (installed on the DC terminals)
- Warning label

If items appear to be missing or damaged, contact your authorized Magnum Energy dealer or DMX Power. If at all possible, keep your shipping box to help protect your inverter from damage if it ever needs to be returned for service. Save your proof-of-purchase as a record of your ownership; it will also be needed if the unit should require in-warranty service.

Record the unit's model and serial number in the front of this manual in case you need to provide this information in the future. It is much easier to record this information now, instead of trying to gather it after the unit has been installed.

2.1.2 Required Tools and Materials

You will need to supply the following when installing your MSH3012RV inverter.

Hardware/Materials

Strain-reliefs and appropriate fittings	1/4" mounting bolts and lock washers
Electrical tape	Wire ties

Tools

Miscellaneous screwdrivers	Pliers	Wire strippers
Drill and drill bits	Pencil or marker	Multimeter
Level	1/2" wrench	

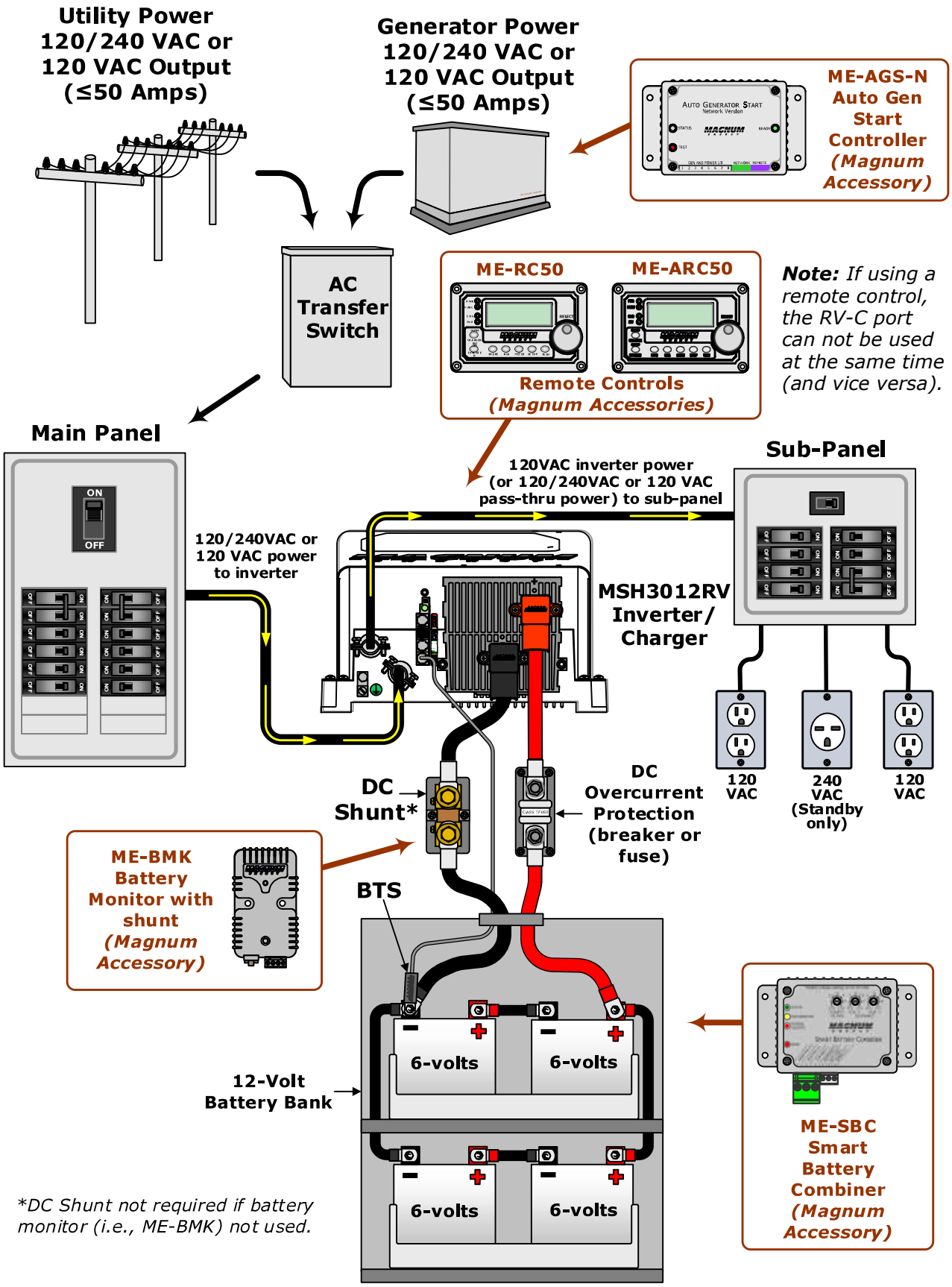

Figure 2-1, Simplified Installation Diagram

2.1.3 Locating the Inverter

Only install the inverter in a location that meets the following requirements:

Clean and Dry – The inverter should not be installed in an area that allows dust, fumes, insects, or rodents to enter or block the inverter's ventilation openings. This area also must be free from any risk of condensation, water, or any other liquid that can enter or fall on the inverter. The inverter uses stainless steel fasteners, plated copper busbars, a powder-coated aluminum base and the internal circuit boards are conformal coated—to help fight the harmful effects of corrosive environments. However, the inverter's life is uncertain if used in these type of environments, and inverter failure under these conditions is not covered under warranty.

Info: If the inverter is installed in an area where moisture may occur, we recommend putting silicone dielectric grease compound into the electrical ports (Figure 1-1, Items 3, 6, and 7). Before installing the cables, or if leaving any ports open, squirt a liberal amount into each port. Silicone dielectric compound makes an effective moisture and corrosive barrier to help protect and prevent corrosion to the RJ11 connections.

Cool – The inverter should be protected from direct sun exposure or equipment that produces extreme heat. The ambient temperature around the inverter must not exceed 77°F (25°C) to meet power specifications.

Ventilation – In order for the inverter to provide full output power and to avoid over-temperature fault conditions, do not cover or block the inverter's ventilation openings or install this inverter in an area with limited airflow. The inverter uses two fans to provide forced air cooling, these fans pull in air through the intake vents (Figure 1-2, Item 10) and blow out air through the exhaust vents (Figure 1-3, Item 14). Allow at the minimum an airspace clearance of 6" (15.2 cm) at the intake and exhaust vents, and 3" (7.6 cm) everywhere else to provide adequate ventilation.

If installed in an enclosure, a fresh air intake opening must be provided directly to the front side (intake vents) of the inverter and an exhaust opening on the back side (exhaust vents) of the inverter. This allows cool air from the outside to flow into the inverter and heated air to exit the inverter and the enclosure. When mounted in an enclosed compartment, airflow must be ≥ 100 cfm in order to maintain no more than a 68°F (20°C) rise in compartment temperature.

CAUTION: Do not mount this inverter in a zero clearance compartment, nor cover or obstruct the ventilation openings—overheating may result.

Safe – Keep any flammable/combustible material (e.g., paper, cloth, plastic, etc.,) that may be ignited by heat, sparks, or flames at a minimum distance of 2 feet (61 cm) away from the inverter.

WARNING: The MSH3012RV inverter/charger is not ignition protected. Do not install this inverter in any area that contains extremely flammable liquids like gasoline or propane.

Close to the battery bank – The inverter should be located as close to the batteries as possible. Long DC wires tend to lose efficiency and reduce the overall performance of an inverter. However, the unit should not be installed in the same compartment as the batteries or mounted where it will be exposed to gases produced by the batteries. These gases are corrosive and will damage the inverter; also, if these gases are not ventilated and allowed to collect, they could ignite and cause an explosion.

Accessible – Do not block access to the inverter's remote control and accessory ports, as well as the inverter's controls and status indicator. Allow enough room to access the AC and DC wiring terminals and connections, as they will need to be checked and tightened periodically. See Figure 2-3 for the MSH3012RV inverter/charger's dimensions.

Away from sensitive electronic equipment – High powered inverters can generate levels of RFI (Radio Frequency Interference). Locate any electronic equipment susceptible to radio frequency and electromagnetic interference as far away from the inverter as possible.

2.2 Mounting the Inverter

The inverter base can reach a temperature up to 194°F (90°C) and should be mounted on a noncombustible surface*. This surface and the mounting hardware must also be capable of supporting at least twice the weight of the inverter. To meet regulatory requirements, the MSH3012RV must be mounted in one of the following positions as shown in Figure 2-2:

- above or under a horizontal surface (shelf or table),
- on a vertical surface (wall) with the DC terminals to the right,
- on a vertical surface (wall) with the DC terminals toward the bottom, and either the ME-CB or MPX-CB conduit box installed on the inverter's bottom.

Info: The ME-CB or MPX-CB conduit box prevents material from falling out the bottom in the event of an internal fire, and also allow sufficient ventilation to prevent the inverter from overheating under normal operating conditions.

Info: Magnum provides a metal backplate for mounting the inverter. This backplate also allows you to mount the MPX-CB conduit box (PN: BP-S single plate).

After determining the mounting position, refer to the physical dimensions as shown in Figure 2-3, or use the base of the inverter as a template to mark your mounting screw locations. After marking the mounting screw locations, mount the unit with appropriate mounting hardware.

** Noncombustible surface – A surface made of material that will not ignite, burn, support combustion, or release flammable vapors when subjected to fire or heat as per the ASTM E136 standard. For the most part, these are surfaces that are largely comprised of inorganic materials such as stone, steel, iron, brick, tile, concrete, slate, and glass. Avoid common building materials such as gypsum board as well as any paint, wall coverings, or wood.*

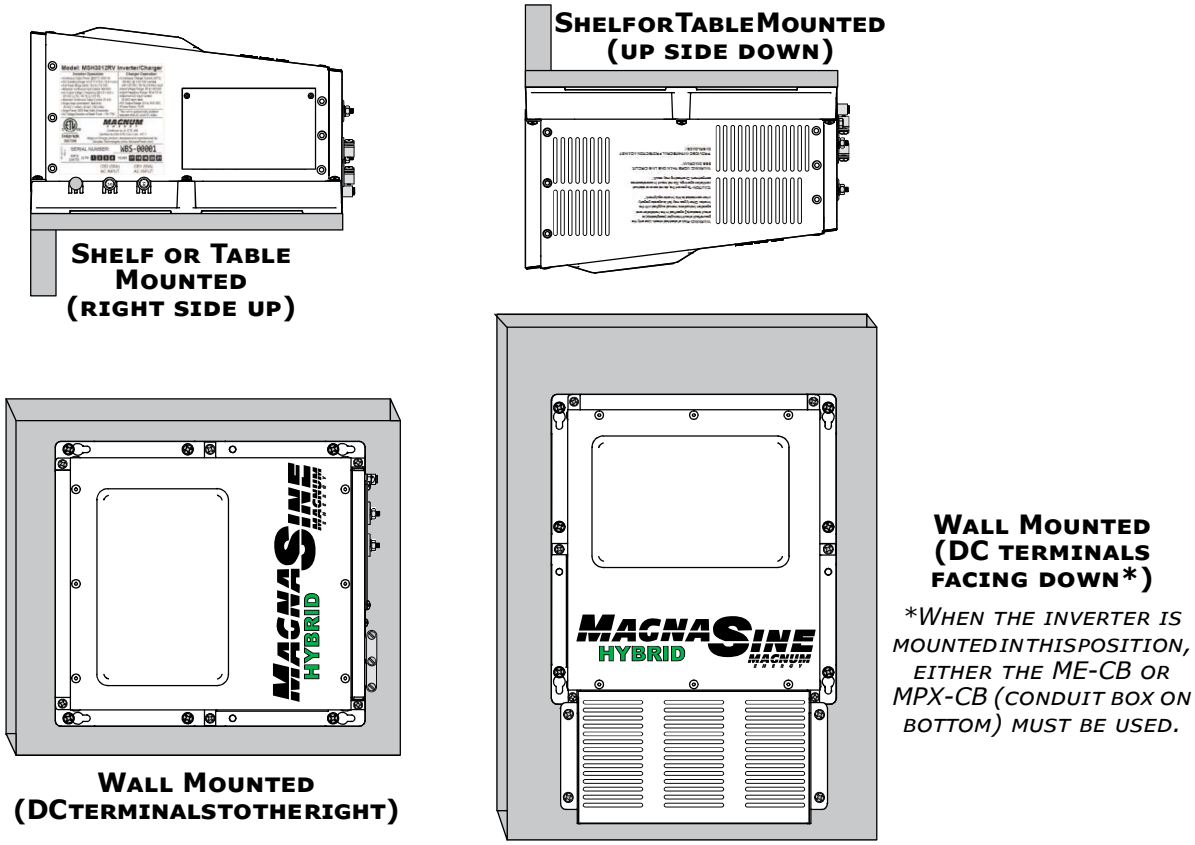

Figure 2-2, Approved Mounting Positions

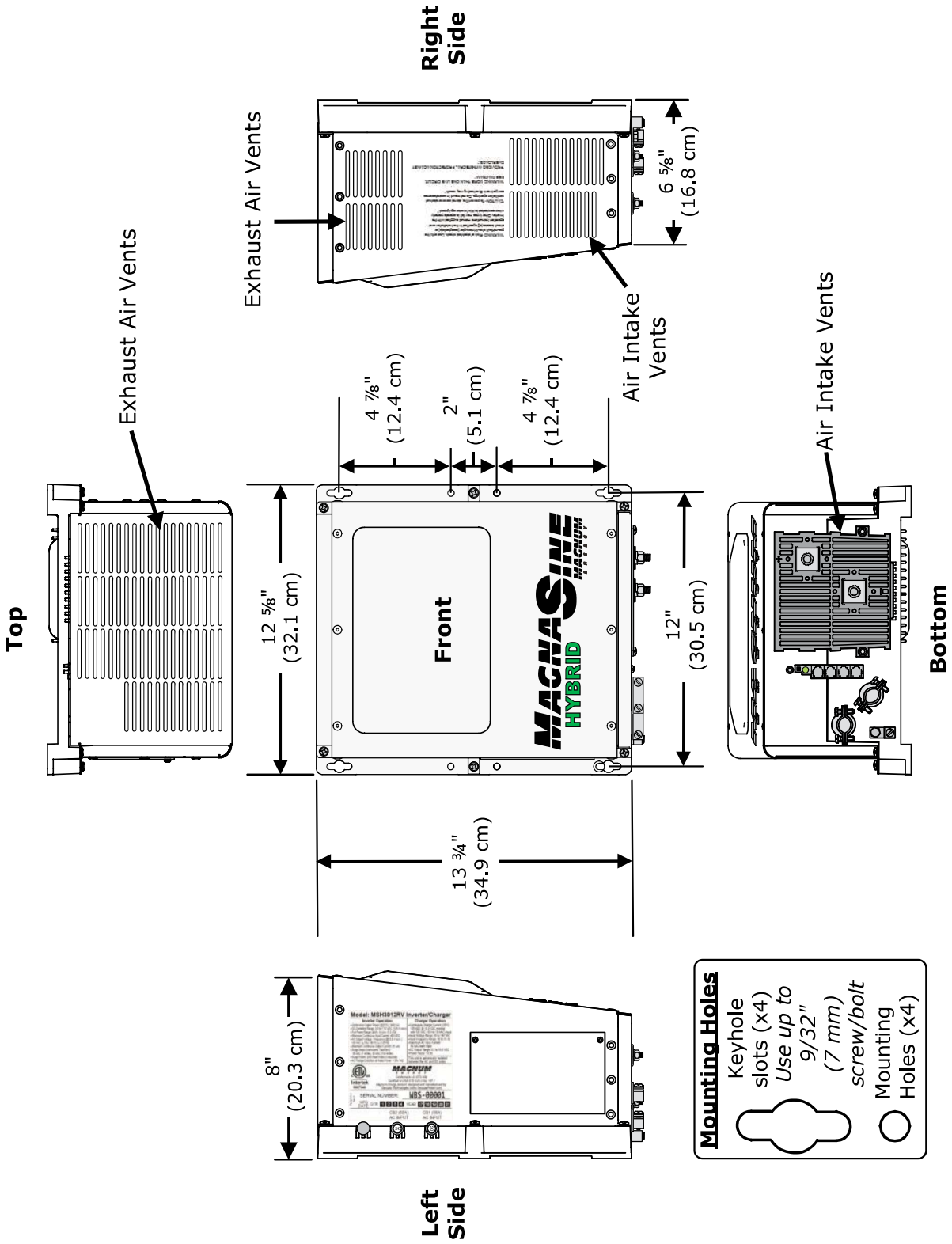

Figure 2-3, MSH3012RV Dimensions and Side References

2.3 Wiring the Inverter – General Requirements

This section describes the requirements and recommendations for wiring the MSH3012RV inverter/charger. Before wiring the MSH3012RV inverter/charger, carefully read all instructions.

Wiring should meet all local codes and standards and be performed by qualified personnel such as a licensed electrician.

The NEC (National Electric Code, ANSI/NFPA 70) for the United States and the CEC (Canadian Electrical Code) for Canada provide the standards for safely wiring residential and commercial installations. The NEC/CEC lists the requirements for wire sizes, overcurrent protection, and installation methods.

Inverter/charger systems involve power from multiple sources (inverter, generator, shorepower, batteries, solar arrays, etc.,) which make the wiring more hazardous and challenging.

The input and output AC and DC circuits are isolated from the inverter chassis. The inverter system grounding is the responsibility of the installer in accordance with the NEC/CEC.

WARNING: Ensure all sources of DC power (i.e., batteries, solar, wind, or hydro) and AC power (shorepower or AC generator) are de-energized (i.e., breakers opened, fuses removed) before proceeding—to prevent accidental shock.

2.3.1 Protecting Wire – Conduit Box

The AC and DC wires to and from the inverter must be protected as required by code. This can be done by using jacketed wires or by feeding the wires through a conduit box. Magnum offers DC conduit boxes (ME-CB or MPX-CB) that allow both the AC and DC conduit to be connected to the inverter.

Info: The strain reliefs can be removed and replaced with 3/4” grommets if you are using either the ME-CB or MPX-CB conduit box and the AC wires are individual conductors (i.e., not jacketed).

2.3.2 Wiring Requirements

- All conductors that are at risk for physical damage must be protected by tape or placed in a raceway.
- Always check for existing electrical, plumbing, or other areas of potential damage prior to making cuts in structural surfaces or walls.
- Do not mix AC and DC wiring in the same panel unless specifically approved/designed for both AC and DC wiring. Where DC wiring must cross AC or vice-versa, try to make the wires at the crossing point perpendicular (90 degrees) to one another.
- Both AC and DC overcurrent protection must be provided as part of the installation.
- The inverter requires a reliable negative and ground return path directly to the battery.
- Use only copper wires with a minimum temperature rating of 167°F (75°C).

2.3.3 Wire Routing

Before connecting any wires, determine all wire routes to and from the inverter. Typical routing scenarios are:

- AC input wiring from the main AC panel to the inverter.
- AC input wiring from a generator (optional) to the inverter.
- DC input wiring from the batteries to the inverter.
- AC output wiring from the inverter to the AC sub-panel or to dedicated circuits.
- Battery Temperature Sensor cable from the inverter to the batteries.
- Remote control cable (optional) to the inverter.
- Ground wiring to and from the inverter.

2.3.4 Torque Requirements

Torque all AC wiring connections to 16 in lbf (1.8 N-m). Torque DC cable connections from 10 to 12 ft lbf (13.6 to 16.3 N-m).

2.4 DC Wiring

This section describes the inverter's required DC wire sizes, the recommended disconnect/ overcurrent protection, and how to make the DC connections to the inverter and the battery bank.

Refer to Figure 2-4 when connecting the DC wires.

WARNING: Even though DC voltage is "low voltage", significant hazards may be present, particularly from short circuits of the battery system.

CAUTION: The inverter is NOT reverse polarity protected—which means that if the negative and positive battery voltage is connected backwards to the inverter, the inverter will likely be damaged. You should verify the correct voltage polarity using a voltmeter BEFORE connecting the DC wires. Before routing the wiring, color code the DC cables/wires with colored tape or heat shrink tubing: RED for positive (+); WHITE for negative (–); and GREEN (or bare copper) for DC ground, to avoid polarity problems.

CAUTION: DO NOT connect the battery cables to the inverter until all wiring is complete and the correct DC voltage and polarity have been verified.

CAUTION: To remove battery power from the inverter, disconnect the battery positive connection before the negative connection. This requirement can prevent damage to the inverter and/or an accessory connected to the inverter.

Note: *When an accessory that is not powered by the inverter (e.g., ME-AGS-N and ME-BMK) is installed and connected to the inverter (via a network communication cable), the battery negative connection of the inverter and each accessory must be at the same potential (i.e., electrically common with each other) until the positive connection of each device is removed. This prevents a high impedance path developing between the connected devices (i.e., inverter and accessories), which can cause the network cable to become the DC return path to the battery—possibly resulting in permanent damage to all connected devices on the network. This can be prevented if the battery negative connection of each device is always connected before connecting/disconnecting any battery positive.*

Refer to Figure 2-4 when connecting the DC wires, consider the following requirements to ensure maximum performance:

The DC positive and negative cables connected to the inverter from the battery bank should be tied together with wire ties/straps or electrical tape approximately every 6 inches (15.3 cm). This helps improve the surge capability and reduces the effects of inductance, which improves the inverter waveform and reduces the wear of the inverter's filter capacitors. Keeping the battery cables close together also reduces the chance of radio frequency interference.

Crimped and sealed copper ring terminal lugs with a 5/16" hole should be used to connect the DC wires to the inverter's DC terminals.

The battery bank voltage MUST match the DC voltage required by the inverter (i.e., 12-volt battery bank for a 12-volt inverter) or the inverter may be damaged.

To ensure the maximum performance from the inverter, all connections from the battery bank to the inverter should be minimized. The exceptions are the DC fuse and disconnect or the DC circuit breaker—required at the battery to protect the DC wiring—in the positive line, and a DC shunt—to allow battery charge state monitoring—in the negative line. Any other additional connection will contribute to additional voltage drops, and these extra connection points may loosen during use.

All wiring to the battery terminals should be checked periodically (once a month) for proper tightness. The torque requirement for the DC terminals is between 10 to 12 ft lbf (13.6 to 16.3 N-m). If you don't have a torque wrench, ensure all DC terminals are tight and cannot move.

A brief spark or arc may occur when connecting the battery cables to the inverter DC terminals; this is normal and due to the inverter's internal capacitors being charged.

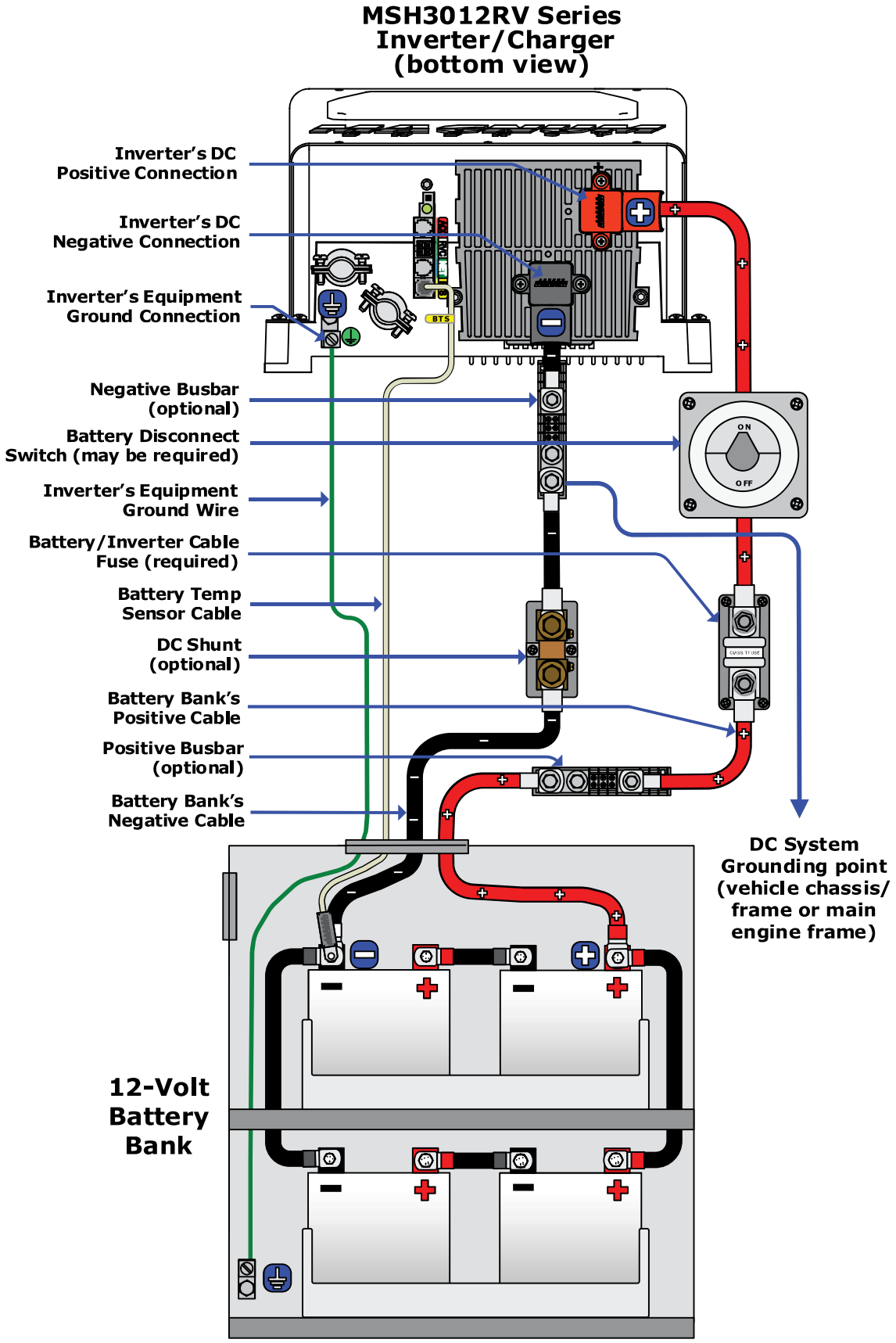

Figure 2-4, DC and Battery Temperature Sensor Wiring

2.4.1 DC Wire Sizing

It is important to use the correct sized DC wire to achieve maximum efficiency from the system and to reduce fire hazards associated with overheating. Always keep your wire runs as short as practical to prevent low voltage shutdowns and to keep the DC breaker from nuisance tripping (or open fuses) because of increased current draw. See Table 2-1 to select the minimum DC wire size (and corresponding overcurrent device) required based on your inverter model. The cable sizes listed in Table 2-1 are required in order to reduce stress on the inverter, minimize voltage drops, increase system efficiency, and ensure the inverter's ability to surge heavy loads.

If the distance from the inverter to the battery bank is >5 feet, the DC wire will need to be increased. Longer distances cause an increase in resistance, which affects the performance of the inverter. Use the overcurrent device previously determined from Table 2-1 and then refer to Table 2-2 to determine the minimum DC wire size needed for various distances, based on your inverter model.

2.4.2 DC Overcurrent Protection

DC overcurrent protection is not included in the inverter—for safety reasons and to comply with NEC (National Electrical Code) regulations—it must be provided as part of the installation. The DC overcurrent protection device must be installed in the positive DC cable line, it can be a fuse or a circuit breaker and must be DC rated. It must be correctly sized according to the size of DC cables being used, which means it is required to open before the cable reaches its maximum current carrying capability, thereby preventing a fire.

Batteries can deliver thousands of amps in an instant during a short. Therefore, you are required to install a DC-rated fuse (or circuit breaker) that has a interrupt current rating (known as Amps Interrupting Current, or AIC) that can withstand the short-circuit current without explosion or damage. If a fuse is used as an overcurrent device, a Class-T type or equivalent is highly recommended when used with inverters. A Class-T fuse is rated for DC operation, can handle very high short-circuit currents (up to 100,000 amps), and has a time delay that allows for momentary current surges from the inverter without opening the fuse. In some installations, if the combined short-circuit current of the battery bank is determined to be 2,700 amps or less, then an ANL type of fuse may be used—if in doubt, use a Class-T fuse. See Table 2-1 for the DC overcurrent device (coordinated with the DC wire size) recommended for your inverter.

**Electrical systems in mobile installations typically do not require using a DC disconnect, although an overcurrent protection device is still required. These installations also do not normally use conduit, so the fuse must be installed in the ungrounded conductor within 18 inches (45.7 cm) of the battery—to protect the DC wiring system.*

Table 2-1, Recommended DC Wire/Overcurrent Device for Rated Use

Inverter Model	Maximum Continuous Current[1]	Minimum DC Wire Size (rating)[2]	Maximum DC Fuse Size[3]	DC Grounding Wire Size[4]
MSH3012RV	400 amps	#4/0 AWG (107.2 mm^2) 405 amps	400 amps with time delay	#6 AWG (13.3 mm^2)

Note[1] *– Maximum continuous current is based on the inverter's continuous power rating at the lowest input voltage with an inverter inefficiency factored in.*

Note[2] *– Copper wire rated with 194°F (90°C) insulation at an ambient temperature of 86°F (30°C), with a multiple cable fill factor (0.8) de-rating in free air (if needed). May require larger conductor, refer to your application wiring requirements, the DC grounding wire may be required to be the same ampacity as the positive cable to the inverter.*

Note[3] *– The next larger standard size overcurrent device may be used if the de-rated cable ampacity falls between the standard overcurrent devices found in the NEC.*

Note[4] *– Per the NEC, the DC grounding electrode conductor can be a #6 AWG (13.3 mm^2) conductor if that is the only connection to the grounding electrode and that grounding electrode is a rod, pipe, or plate electrode.*

Table 2-2, DC Wire Size For Increased Distance

Inverter Model	Minimum Recommended DC Wire Size (one way)*		
	5 feet or less	5 to 10 feet	10 to 15 feet
MSH3012RV	#4/0 AWG (107.2 mm^2)	#4/0 AWG x2 (107.2 mm^2 x2)	not recommended

** Copper wire rated with 194°F (90°C) insulation at ambient temperature of 86°F (30°C) in free air.*

2.4.3 DC Cable Connections

Do not put anything between the battery cable ring lug and the battery post or the flat metal part of the inverter's DC terminal. When connecting the battery cable to the battery post or inverter DC terminal, the cable should be placed directly against the inverter terminal or battery post. Incorrectly installed hardware causes a high resistance connection which could lead to poor inverter/charger performance, and may melt the cable and terminal connections.

Refer to Figures 2-5 and 2-6 to connect the DC cables and to stack the hardware correctly. Tighten the terminal connections from 10 to 12 ft lbf (13.6 to 16.3 N-m).

Info: The DC terminal and Flange/Kep nuts are made of stainless steel and using power tools can cause them to seize on the bolt. To help prevent the bolt and nut from seizing—causing the bolts to strip or snap/break-off—anti-seize lubricant should be used.

Info: If antioxidant grease or spray is used, apply it after all the connections have been made and are properly tightened.

Info: A 1/2-inch wrench or socket is used to tighten the 5/16 SAE Flange/Kep nuts.

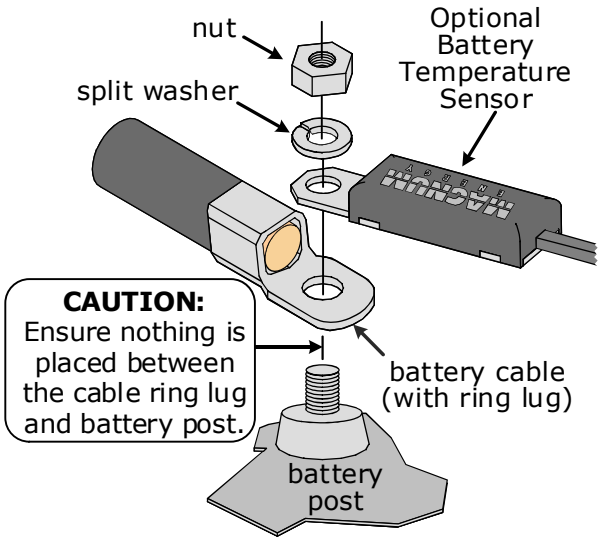

Figure 2-5, Battery Hardware Installation

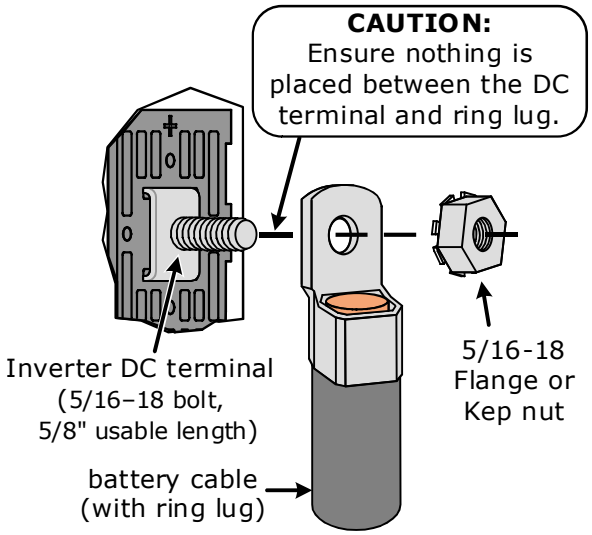

Figure 2-6, Inverter DC Hardware Installation

2.4.4 Wiring the DC Overcurrent Protection Device

A fuse/disconnect or circuit breaker must be provided in the DC positive line between the battery and the inverter to protect the DC wiring system. Mount the fuse block (or circuit breaker assembly) as near as practical to the batteries. For maximum protection, install it within 18 inches (45 cm) of the battery.

1. Open the fuse disconnect (or open the circuit breaker) and connect a short cable (same rating as the battery cables) to one end of the fuse block.
2. Connect the short cable to the positive battery terminal.
3. Connect the positive cable (RED) from the inverter to the fuse/disconnect (or circuit breaker) assembly. DO NOT connect the positive cable to the inverter at this time.
4. Securely tighten the fuse/disconnect (or circuit breaker) connection lugs. Once the entire installation is complete and all connections are verified, close the fuse disconnect (or circuit breaker) to provide power to the inverter.

2.4.5 Wiring the Battery Bank

WARNING: Lethal currents will be present if the positive and negative cables attached to the battery bank touch each other. During the installation and wiring process, ensure the cable ends are insulated or covered to prevent touching/shorting the cables.

Info: DO NOT connect the DC wires from the battery bank to the inverter until 1) all DC and AC wiring is complete, 2) the correct DC and AC overcurrent protection has been installed, and 3) the correct DC voltage and polarity have been verified.

Info: For the MSH3012RV inverter/charger to perform optimally, a minimum battery bank of 200 AH is recommended for moderate loads (<1000W) and greater than 400 AH for heavy loads (≥1000W).

Depending upon the voltage of the batteries you use in the installation (6 or 12 VDC), the batteries must be wired in series, parallel, or series-parallel to provide the correct voltage (see Appendix B – Battery Information for guidance on wiring batteries together). The interconnecting DC wires must be sized and rated exactly the same as those used between the battery bank and the inverter.

Place the batteries as close as practical to the inverter, preferably in an insulated and ventilated enclosure. Allow adequate space above the batteries to access the terminals and vent caps (as applicable). Also, allow at least 1” of space between the batteries to provide good air flow. DO NOT mount the batteries directly under the inverter.

CAUTION: Install batteries in a well ventilated area. Batteries can produce explosive gasses. For compartment or enclosure installations, always vent batteries to the outside.

Info: To ensure the best performance from your inverter system, batteries should be of the same size, type, rating, and age. Do not use old or untested batteries.

2.4.6 Optional Battery Temperature Sensor Installation and Wiring

The Battery Temperature Sensor (Figure 2-7) provides the inverter with precise battery temperature information to automatically adjust the charge voltage set-points (Absorb, Float or Constant Voltage). This allows the batteries to be correctly charged under extreme temperature changes.

If the temperature sensor is NOT installed and the batteries are subjected to large temperature changes, the battery life may be shortened.

The BTS cable may be extended—using a RJ11 connector (female to female) and a standard phone cable with RJ11 connectors—to a maximum length of 40 feet (12m). However, your inverter to battery cable length should not exceed the recommended distance provided in Table 2-2.

To install the BTS:

1. Attach the ring terminal end of the Battery Temperature Sensor to the negative battery terminal; see Figure 2-5 for proper connection to the battery terminal.
2. Route the sensor's cable to the inverter following existing wire runs.
3. Connect the RJ11 connector end of the BTS cable to the yellow-labeled BTS port on the inverter (Figure 1-1, Item 7).

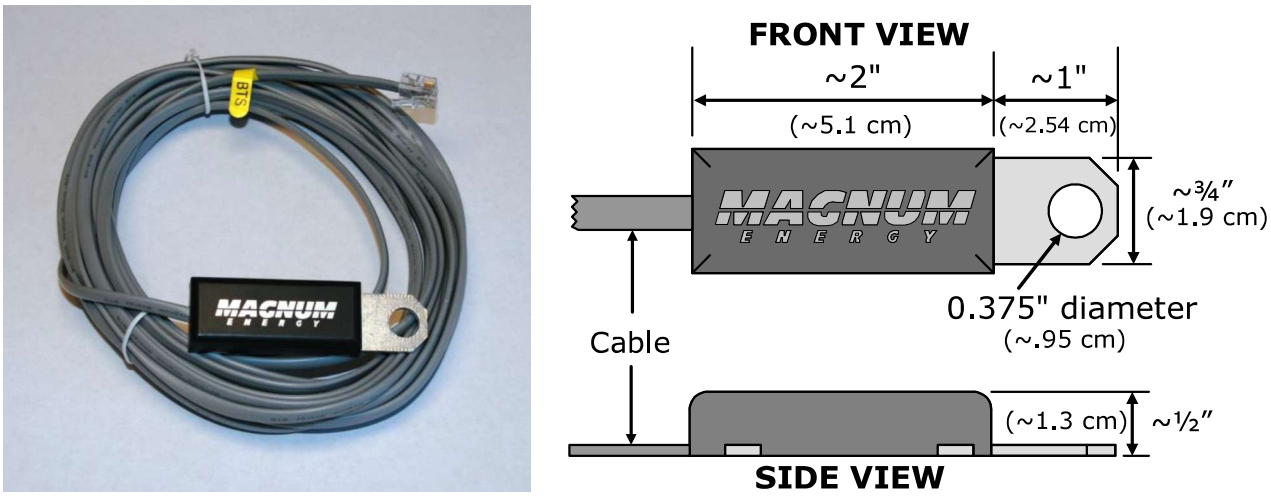

Figure 2-7, Optional Battery Temperature Sensor

2.4.7 Wiring the Inverter to the Battery Bank

CAUTION: The inverter is NOT reverse polarity protected—if this happens the inverter will be damaged and will not be covered under warranty. Before connecting the DC wires from the batteries to the inverter, verify the correct battery voltage and polarity using a voltmeter. If the positive terminal of the battery is connected to the negative terminal of the inverter and vice versa, severe damage will result. If necessary, color code the cables (with colored tape): red for positive (+), and white for negative (–) to avoid polarity confusion.

Info: The DC overcurrent device (i.e., circuit breaker or fuse) must be placed in the positive (red) DC cable line between the inverter's positive DC terminal and the battery's positive terminal (red)—as close to the battery as possible.

DC Ground Wire

1. Route an appropriately sized DC grounding wire (green or bare wire) from the inverter's DC equipment ground terminal (Figure 1-2, Item 8) to a dedicated system ground. Recommended tightening torque is 45 in lbf (5.1 N-m). Refer to Section 2.6 for grounding information and sizing the DC ground wires.

DC Negative Wire

2. Route an appropriately sized DC negative wire (marked white) from the negative terminal of the battery bank to the inverter's negative terminal (Figure 1-2, Item 12).

Info: If installing a battery monitor such as the ME-BMK, install a DC shunt in-line with the negative battery cable.

DC Positive Wire

3. Mount the circuit breaker or fuse assembly as near as practical to the batteries and leave open (i.e., no power to inverter).

WARNING: DO NOT close the DC circuit breaker or connect the fuse to connect battery power to the inverter at this time. This will occur in the **Functional Test** after the installation is complete.

CAUTION: If connecting live battery cables to the inverter DC terminals, a brief spark or arc may occur; this is normal and due to the inverter's internal capacitors being charged.

5. Route and connect an appropriately sized DC positive wire (red) from the inverter's positive DC terminal (Figure 1-2, Item 11) to one end of circuit breaker (or DC fuse block).
6. Connect a short wire (same rating as the DC wires) to the other side of the DC circuit breaker (or one end of the fuse/disconnect assembly) and the other end of the short wire to the positive terminal of the battery bank (see Figure 2-1 for reference). This is essential to ensure even charging and discharging across the entire battery bank.
7. Ensure the DC wire connections (on the batteries, inverter, and DC circuit breaker/fuse lugs) are flush on the surface of the DC terminals, and the hardware (lock washer and nut) used to hold these connections are stacked correctly (see Figures 2-5 and 2-6). Verify all DC connections are torqued from 10 to 12 ft lbf (13.6 to 16.3 N-m).
8. Once the DC connections are completely wired and tested, coat the terminals with an approved anti-oxidizing spray.
9. Attach the red and black terminal covers over the inverter's DC connectors and secure them in place with the supplied screws.
10. If the batteries are in an enclosure, perform a final check of the connections to the battery terminals, then close and secure the battery enclosure.

2.5 AC Wiring

This section provides information on how to make the AC connections to the inverter using the correct AC wire size and corresponding overcurrent protection.

2.5.1 Pre-AC Wiring Requirements

WARNING: To reduce the risk of fire, do not connect this inverter to an AC load center (circuit breaker panel) having multi-wire branch circuits connected.

CAUTION: Before installing any AC wiring, review the safety information at the beginning of this manual and the following to ensure a safe and long-lived system:

AC wiring must be copper, approved for the application (i.e., RV wiring), and must be no less than #8 AWG (8.36 mm²) on the inverter's input and no less than #6 AWG (13.3 mm²) on the inverter's output to allow the full current capacity of this inverter.

DO NOT connect the inverter's output to an external AC power source. This could cause severe damage to the inverter and is not covered under warranty.

The wire sizes recommended in this manual are based on the ampacities given in Table 310.17 (in free air) of the NEC, ANSI/NFPA 70, for 75ºC (167ºF) copper wire based on an ambient temperature of 30ºC (86ºF).

The AC input and output neutrals must be isolated from each other, do not route the AC input and output neutrals to a common neutral bus.

2.5.2 AC Wire Size and Overcurrent Protection

The AC input and output wiring must be sized per the local electrical safety code requirements to ensure the wire's ability to safely handle the inverter's maximum load current. The AC wiring must be protected from short circuits and overloads by an overcurrent protection device and have a means to disconnect the AC circuits. AC overcurrent protection is not included in the inverter and must be provided as part of the inverter installation. The AC overcurrent protection device must be a circuit breaker or a fuse/disconnect, and be properly sized and branch circuit rated for the wire it is protecting and the appliances being powered.

Info: When wiring the AC input and output circuits, we recommend a full system Inverter Bypass Switch. This simple item isolates the inverter from the battery, which could save hours of downtime—if you ever need to perform battery maintenance or service the inverter—by enabling you to continue to power your AC loads without any re-wiring.

The AC input capacity of the MSH3012RV inverter/charger is limited to 50 amps maximum. This requires a 50-amp continuous duty rated breaker, which corresponds to a minimum cable size of #8 AWG (8.36 mm²). If you are using other circuit breakers/wire sizes, refer to appropriate electrical codes for sizing requirements.

This inverter when connected to an AC source for charging also has an automatically enabled load support feature. This means the inverter's AC output current can be greater than the current supplied to the inverter's input by the AC source. The output of the inverter can supply 60 amps AC, this requires a minimum cable size of #6 AWG (13.3 mm²) on the inverter's output.

CAUTION: The load support current of this inverter in combination with the inverter's input current can supply 60 amps on the inverter's output. Be aware, if you are installing this inverter in a coach that is not wired for at least 60 amps on the inverter's output circuit, then an appropriately sized over-current protection device (i.e., fuse/circuit-breaker) must be installed on the inverter output circuit to prevent damage.

CAUTION: Even though this inverter can provide 60 amps AC on its output in Standby mode (i.e., AC power is connected to the inverter's AC input), it can only provide 25 amps AC continuously while inverting in inverter mode (i.e., only using battery power to power the inverter loads). When inverting, ensure the total current requirement of the inverter loads are not rated for more than 25 amps AC continuous; or you may experience inverter overload conditions and/or the inverter loads not operating.

2.5.3 Recommended GFCI (Ground Fault Circuit Interruption) Outlets

In compliance with UL standards, DMX Power has tested the following GFCIs and found that they function properly when connected to the inverter's AC output:

- Leviton 8899-A, N7899, GFNT1 and GFNT2 Series

WARNING: Risk of electrical shock. Use only ground-fault circuit interrupters [receptacle(s) or circuit breaker(s)] compatible with your MSH3012RV inverter/charger.

CAUTION: GFCIs shall be installed in a recreational vehicle's wiring system to protect all branch circuits.

2.5.4 AC Terminal Block Connections

The MSH3012RV has a six-pole AC terminal block and two AC ground terminals to connect the inverter's AC input/output wiring. This terminal block (Figure 2-8) allows a service/distribution panel (main panel) to be wired to the inverter's input, and also a dedicated panel (sub-panel) between the inverter's output wiring and the AC loads. To access the AC terminal block and ground terminal, remove the two Phillips screws holding the AC wiring access cover plate (Figure 1-3, Item 16).

Each AC terminal block connection can accept #18 to #4 AWG (.82 to 21.14 mm^2) copper wire only. Each connection uses a slotted screw, and the maximum tightening torque is 16 lbf-in (1.8 N-m).

Info: The inverter's NEUT IN and NEUT OUT terminals are electrically isolated from each other while inverting. This is related to the neutral-ground bonding requirement and helps prevent ground-loops (see Section 2.6.4 for more information).

The AC ground terminal can accept one #14 to #6 AWG (2.1 to 13.3 mm^2) CU wire. It uses a slotted head screw and has a recommended maximum tightening torque of 45 in lbf (5.1 N-m). For multiple ground wires, use a pressure or mechanical connector to attach the single wire from the AC ground terminal to the input and output ground connections.

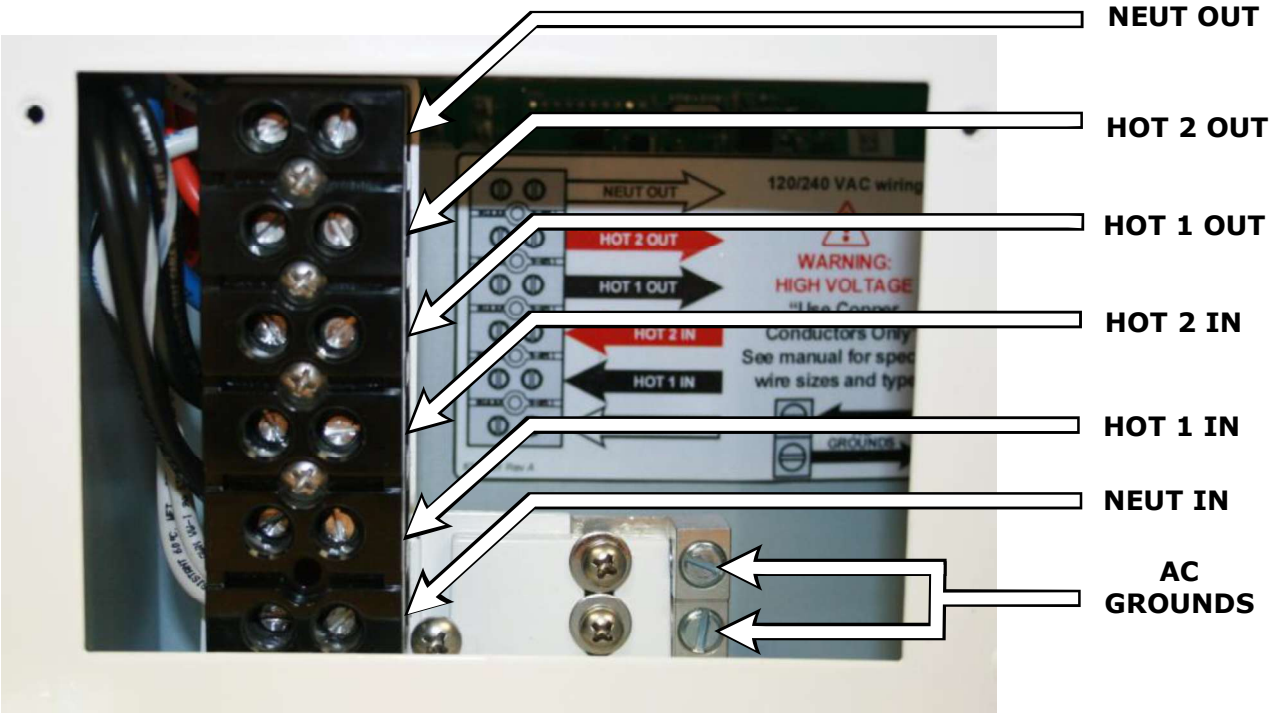

Figure 2-8, MSH3012RV AC Terminal Block

2.5.5 AC Conductor Wiring

The following steps are basic guidelines for installing and connecting AC wiring to and from an MSH3012RV inverter.

WARNING: Before making any AC connections, make sure the inverter is disconnected from the battery and no AC power is connected to the inverter.

Remove the two Phillips screws on the AC wiring access cover (Figure 1-3, Item 16) to access the internal AC terminal block (see Figure 2-8).

Wiring the Inverter AC Input

1. Route the wires (HOT, NEUTRAL, and GROUND) from the AC electrical main panel through one of the strain relief clamps on the inverter (Figure 1-2, Item 9). Tighten the strain relief clamp securely on the wires. Always leave a little extra slack in the wiring. Refer to Figure 2-9 for this procedure.
2. Connect a HOT wire (black) from the main panel's dedicated breaker to the inverter's HOT 1 IN terminal. Tighten the HOT 1 IN terminal to 16 in-lbf (1.8 N-m).

   Info: You must connect to the HOT 1 IN terminal if you want to use the battery charger. If also connecting to the HOT IN 2 terminal, the incoming AC must provide a neutral and come from either a split-phase (120/240VAC) or three-phase (120/208VAC) source.

3. *Optional:* If wiring as Dual In (DI), connect another HOT wire (red) from the main panel's dedicated breaker to the inverter's HOT 2 IN terminal. Tighten the HOT 2 IN terminal to 16 in-lbf (1.8 N-m).
4. Connect the NEUTRAL (white) from the main panel's neutral busbar to the inverter's NEUT IN terminal. Tighten the NEUT IN terminal to 16 in-lbf (1.8 N-m).

Wiring the Inverter AC Output

5. Route the wires (HOT, NEUTRAL, and GROUND) through the unused strain relief clamp on the inverter (Figure 1-2, Item 9) to the AC electrical sub-panel. Tighten the strain relief clamp securely on the wires.
6. Connect a HOT (black) wire from the inverter's HOT 1 OUT terminal to the sub-panel's main breaker. Tighten the AC HOT 1 OUT terminal to 16 in-lbf (1.8 N-m).
7. *Optional:* If wiring as Dual Out (DO), connect another HOT (red) wire from the inverter's HOT 2 OUT terminal to the sub-panel's main breaker. Tighten the AC HOT 2 OUT terminal to 16 in-lbf (1.8 N-m).
8. Connect the NEUTRAL (white) from the inverter's NEUT OUT terminal to the sub-panel's neutral busbar. Tighten the NEUT OUT terminal to 16 in-lbf (1.8 N-m).

Wiring the Inverter AC Ground

9. Combine the ground (GREEN) wire from the main panel's ground busbar and the ground (GREEN) wire from the sub-panel's ground busbar (or the ground connection on the outlets if using the output breaker versions). After these grounds are combined, connect them to the inverter's AC GROUND terminal. Tighten the AC GROUND terminal to 16 in-lbf (1.8 N-m).

AC Wiring Inspection

1. Verify all cable runs are secured. Use wire ties or other non-conductive fasteners to prevent chafing or damage from movement and vibration.
2. Verify strain reliefs or grommets are in place to prevent damage to the wiring where it passes through walls/bulkheads or other openings.
3. Verify that all AC connections are correct, all the inverter AC terminal screws are torqued to a maximum tightening torque of 16 in lbf (3.6 N-m), and the AC ground terminal is torqued to a maximum tightening torque of 45 in lbf (5.1 N-m).
4. Replace the AC wiring access cover and the covers on the main electrical/distribution panel.

2.5.6 AC Wiring Configurations

The following table provides the different wiring configurations for installing and connecting the AC conductors to and from the inverter (refer to Figures 2-9 to 2-11 for installation drawings showing these configurations).

Table 2-3, AC Input/Output Wiring Configurations

	SI/SO Single In/ Single Out	**DI/SO Dual In/ Single Out**	**DI/DO Dual In/ Dual Out**
Maximum AC Source[1] Required	120 VAC @ 50A (AC Input 1 only)	120 VAC @≤50A per input leg[2]	120 VAC @≤50A per input leg[2]
Reason to Use	Have a 120 VAC source. Requires a separate inverter sub-panel.	Want dedicated charging and dedicated pass-thru while the AC source is on. Requires a separate inverter sub-panel.	May need to power large 240 VAC loads (requires 120/240 VAC input source). Requires a separate inverter sub-panel.
Maximum Input Breaker Required[3]	50A (single pole)	50A (dual pole)	50A (dual pole)
–	–	–	–
Minimum Wire Size (AWG)[4]	#8 AWG (in) #6 AWG (out)	#8 AWG (in) #6 AWG (out)	#8 AWG (in) #6 AWG (out)
Maximum Output Capacity (Standby Mode)	7200W (120 VAC/60A on Hot 1 out)	6000W (50A @120 VAC on Hot 2 out)	13200W (120/60A on Hot 1 out and 120/50A Hot 2 out)
Diagram	Figure 2-9	Figure 2-10	Figure 2-11

Note[1] *– AC source is from either the utility/grid power (i.e., shorepower) or an AC generator.*

Note[2] *– If two legs @120 VAC are used, they must be from the same source (i.e., common neutral) and not in phase with each other. You can use a neutral and two legs from either a split-phase (120/240 VAC) source or from a three-phase (120/208 VAC) source.*

Note[3] *– The 'Maximum Input Breaker Required' is used to protect the inverter's internal AC input circuit, which is rated for 50 amps for each input.*

Note[4] *– The 'Minimum Wire Size (AWG)' is based on the 'Maximum Input Breaker Required' size and the 'Maximum Output Capacity (Standby Mode)' current. If the wire size is reduced, then an appropriately sized over-current protection device (i.e. fuse/circuit-breaker) would need to be installed to prevent damage to the reduced sized wire.*

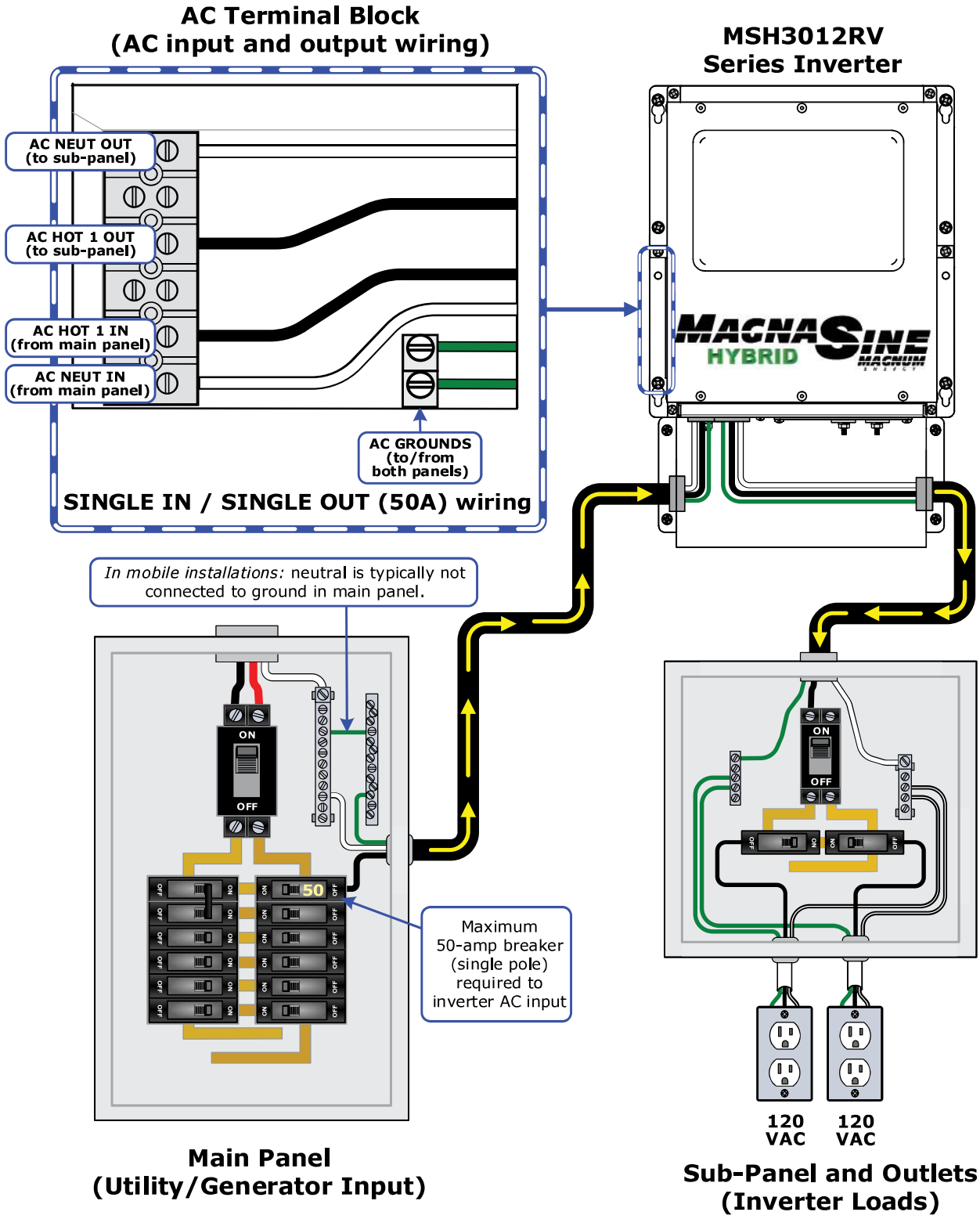

Figure 2-9, AC Wiring for Single In – Single Out Configurations

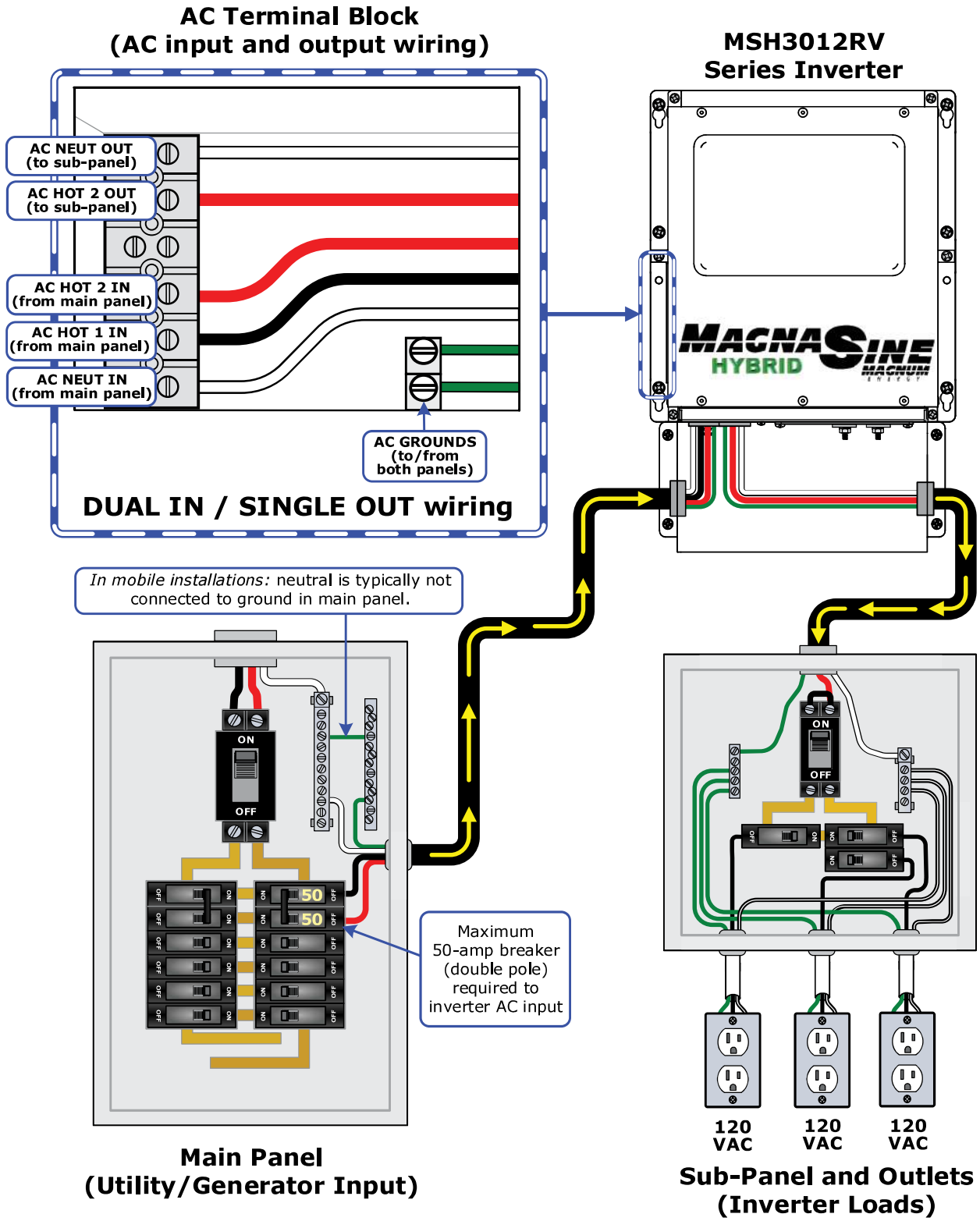

Figure 2-10, AC Wiring for Dual In – Single Out Configurations

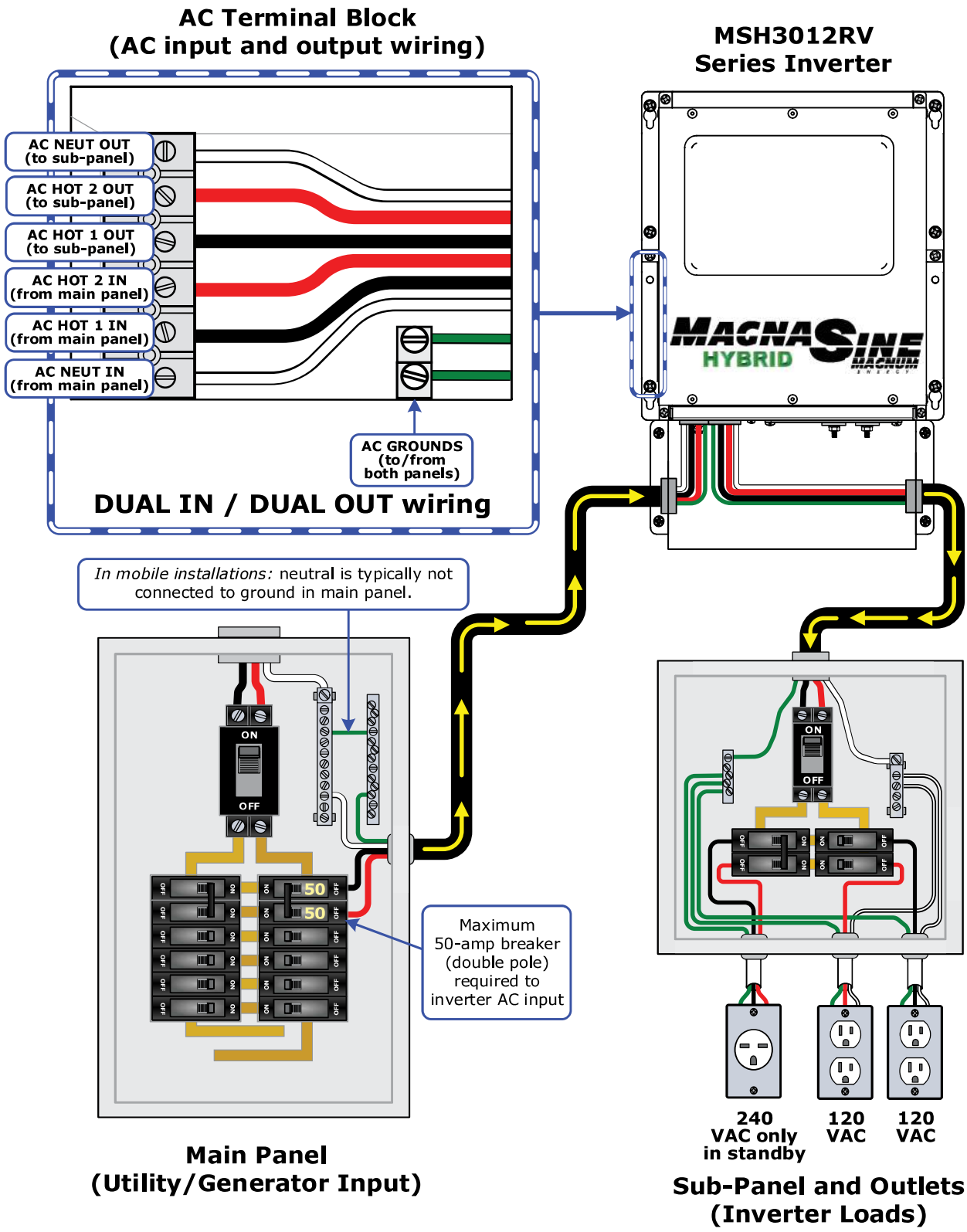

Figure 2-11, AC Wiring for Dual In – Dual Out Configurations

2.6 Grounding Inverters

The MSH3012RV inverter/charger uses both AC and DC electrical systems, therefore **each** electrical system is required to be properly connected to a permanent, common "ground" reference. An inverter that is properly grounded limits the risk of electrical shock, reduces radio frequency noise, and minimizes excessive surge voltages induced by lightning. The installation must ensure there is a well-defined, very low resistance path from the electrical system to the grounding system. The low resistance path helps stabilize the electrical system voltage with respect to ground and carries fault currents directly to ground, causing a fuse to blow or a circuit breaker to trip if the electrical system malfunctions (i.e., short circuits). To understand how the conductors in the electrical circuit will be connected to the system ground, review the following terms along with Figure 2-12:

Grounded Conductor **(GC)**: The wire in the electrical system that normally carries current (i.e., AC neutral and DC negative), and is intentionally connected or "bonded" to the ground system. This wire, or the ends of this wire, should be colored white or gray.

- Equipment Grounding Conductor **(EGC)**: A wire that does not normally carry current and is used to connect the exposed metal parts of equipment—that might be accidentally energized—to the grounding electrode or to the grounded conductor.
- Grounding Electrode Conductor **(GEC)**: The wire that does not normally carry current and connects the grounded conductor and/or the equipment grounding conductor to the common ground reference, usually at the ground busbar in the service equipment.
- Grounding Electrode **(GE)**: A conducting element that establishes an electrical connection for a common ground reference. In vehicles, it is usually the chassis or frame; in vessels, it is the largest metal item onboard, usually the main engine frame.
- System Bonding Jumper **(SBJ)**: The connection or "bond" between the grounded conductor in the electrical system (AC neutral/DC negative) and the equipment grounding conductor.

For proper grounding, each electrical system must connect all exposed metal parts of equipment (via Equipment Grounding Conductors – EGC) and one of the current-carrying conductors (Grounded Conductor – GC) together at a common point (ground busbar), usually by a System Bonding Jumper (SBJ). The common point of each electrical system is then connected (via Grounding Electrode Conductor – GEC) to the Grounding Electrode (GE). The connection to the grounding electrode should be made at one and only one point in each electrical system (AC and DC); otherwise, parallel paths will exist for the currents to flow. These parallel current paths would represent a safety hazard and are not allowed in installations wired per the NEC/CEC. Since the MSH3012RV uses both AC and DC power—to prevent parallel current paths—the AC electrical system is isolated from the DC electrical system by an internal transformer.

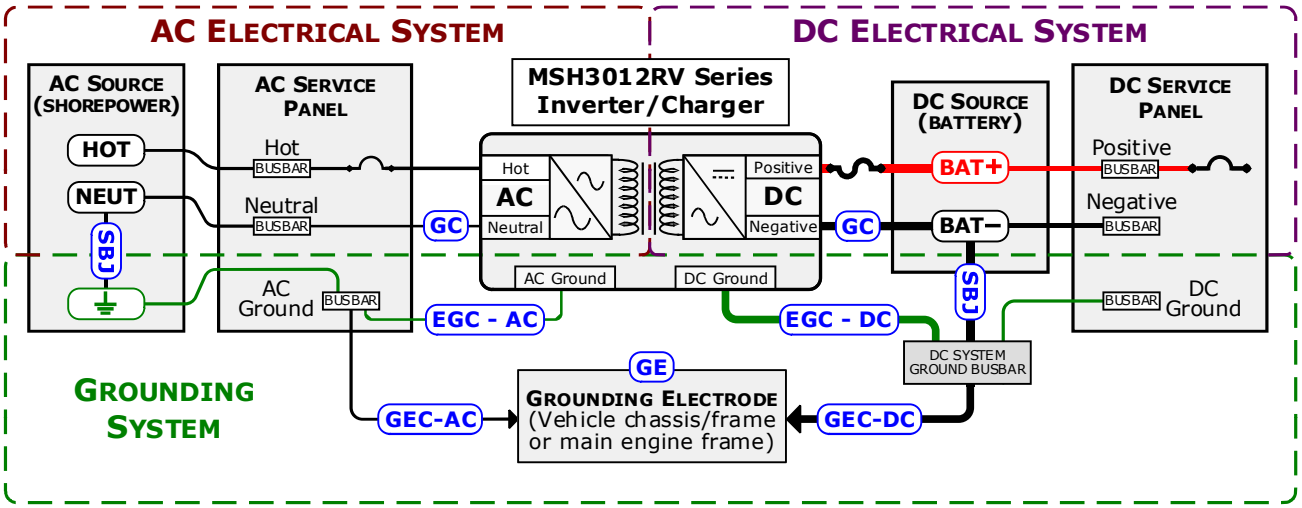

Figure 2-12, Grounding System for MSH3012RV

2.6.1 Equipment Grounding Conductors

The inverter case and all other noncurrent-carrying exposed metal surfaces in the entire electrical system—that may be accidentally energized—must be grounded. The equipment-grounding conductor must be sized to safely carry the maximum ground-fault current likely to be imposed on it from where a ground-fault may occur. In accordance with the NEC, use Table 2-4 to size the equipment-grounding conductors according to the rating of the overcurrent device protecting the circuit.

CAUTION: The connections and wiring for the equipment-grounding conductor must be continuous to allow fault currents to properly operate overcurrent devices. Whenever equipment is removed that disconnects the bonding connection between the grounding electrode conductor and the exposed conducting surfaces, a bonding jumper must be installed while the equipment is being removed.

AC Side – The AC equipment grounding conductor (EGC–AC) is sized per Table 2-4 and is connected to the inverter's AC equipment grounding terminal shown in Figure 2-8.

DC Side – Since the currents on the DC side are much higher than the AC side, the equipment grounding needs are different. The DC equipment grounding conductor (EGC–DC) is sized per Table 2-4 and connected to the DC equipment grounding terminal on the inverter as shown in Figure 1-2, Item 8.

Info: The equipment grounding conductors (EGC) and the grounding electrode conductors (GEC) must be either insulated (green or green with a yellow stripe) or bare copper. However, for conductors larger than #6 AWG (13.3 mm^2) the exposed insulation can be colored green, or covered with green tape or green adhesive labels.

Table 2-4, Equipment Grounding Conductor Sizing

Rating of Overcurrent Device	Minimum Size of Copper Ground Wire	Rating of Overcurrent Device	Minimum Size of Copper Ground Wire
20 amps	#12 AWG (3.3 mm^2)	200 amps	#6 AWG (13.3 mm^2)
30 – 60 amps	#10 AWG (5.3 mm^2)	300 amps	#4 AWG (21.1 mm^2)
100 amps	#8 AWG (8.4 mm^2)	400 amps	#3 AWG (26.7 mm^2)

2.6.2 Grounding Electrode Conductors

AC Side – The size of the AC grounding electrode conductor (GEC–AC) depends on the size of the largest ungrounded conductor feeding the AC load center. For ungrounded conductors that are #2 AWG (33.6 mm^2) or smaller, use a minimum #8 AWG (8.4 mm^2) copper conductor.

DC Side – When the DC (GEC-DC) and AC (GEC-AC) grounding electrode conductors are connected to a single grounding electrode, the size of the DC grounding electrode conductor cannot be smaller than the largest conductor in the DC system (usually the battery-to-inverter cable).

2.6.3 System Bonding Jumpers

AC Side – The AC system bonding jumper (SBJ) provides the neutral-to-ground "bond" between the grounded conductor (AC neutral) and the equipment grounding conductor, and is required in only one place in the AC electrical system. When the MSH3012RV is connected to an external AC source (i.e., shorepower), the external AC source must provide the bond. However, when the external AC source is disconnected and the inverter is providing the AC power (i.e., inverting), an internal relay inside the inverter connects the neutral and ground to provide the bond. See Section 2.6.5 for more information on the neutral-to-ground switching feature.

DC Side – The size of the system bonding jumper (SBJ) in the DC electrical system must not be smaller than the DC grounding electrode conductor (GEC–DC) used.

2.6.4 Neutral to Safety Ground Bonding

The standards for safely wiring RV installations in the United States require the neutral and safety ground to be connected at the AC source; whether it is a shorepower feed, an inverter, or a generator. This is to establish a specification that maximizes the possibility that a circuit breaker will activate if a hotwire-to-ground fault occurs. These standards also require that the AC neutral be connected to safety ground (often called a "bond") in one, and only one, place at any time. The single bond is established in order to make the electrical panel's neutral line safe, by connecting it to ground. Without this bond, the neutral can have up to 60 VAC with respect to ground. On the other hand, if more than one bond is established, currents can circulate between neutral and ground and cause "ground-loop" currents. These ground-loops can trip GFCIs, cause an electric shock hazard, and may be the reason for other annoying side effects.

In applications where you are using an inverter as one of your AC sources along with another AC source (i.e., shorepower or generator), there is the potential of having multiple connections (bonds) between neutral and ground. Therefore, you must ensure that the inverter does not also connect the neutral-to-ground while the other AC source is actively powering the inverter loads. This can be prevented if your inverter is equipped with automatic neutral-to-ground switching, similar to what is included in the MSH3012RV.

WARNING: Whether the AC input source to the inverter is an external AC hook-up (i.e., shorepower) or an onboard AC generator, the inverter's automatic neutral-to-ground bonding system requires the input source to have the neutral-to-ground bond.

Also, any bond downstream from the inverter must be removed to prevent multiple bonds. If there is an inverter sub-panel—separate from a main electrical panel—it should have a removable wire that allows the neutral bus to be unbonded from the ground busbar.

The automatic neutral-to-ground switching in the MSH3012RV is designed to specifically work in RV applications, and requires the AC source connected to the inverter's input to have a bonded neutral. The MSH3012RV uses an internal relay that automatically connects the AC neutral output terminal to the vehicle's ground while inverting (Inverter mode) to provide the neutral-to-ground bond; as shown in Figure 2-13. However, when an external AC source (i.e., shorepower or a generator) is connected, another neutral-to-ground connection is introduced in the system. When the MSH3012RV is connected to this external AC source and goes into Standby mode, the internal relay automatically opens the neutral-to-ground connection as shown in Figure 2-14. This design keeps two neutral-to-ground connections from occurring at the same time, thereby preventing an electrical shock hazard between the RV's neutral and the external AC source's neutral.

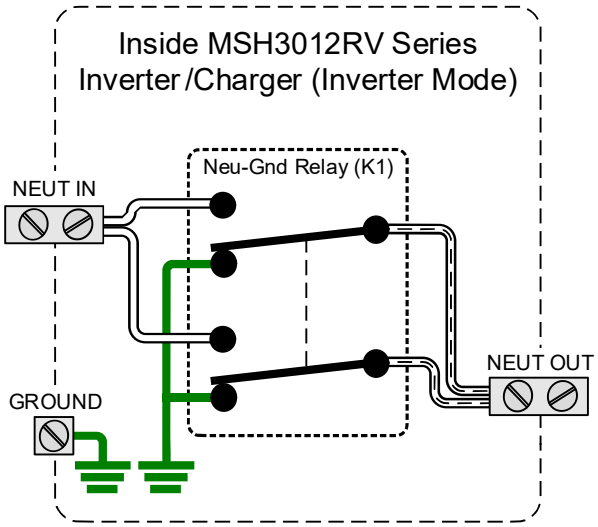

Figure 2-13, Neutral-to-Ground Connection (Inverter Mode)

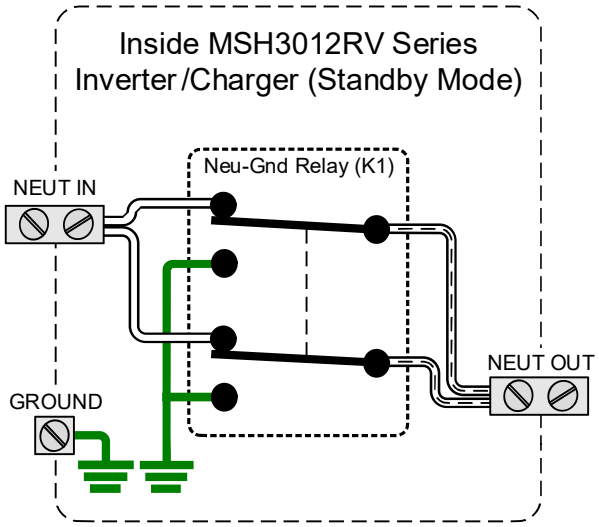

Figure 2-14, Neutral-to-Ground Connection (Standby Mode)

2.7 Inverter Warning Label

A warning label as shown in Figure 2-15 is provided to inform all personnel that an inverter is installed in your electrical system. Affix this label in a clearly visible location at the electrical panel that is being powered by the inverter. This is because it might be falsely assumed that the panel is no longer "hot" after the AC power has been shut off, when power may actually still be available due to the inverter automatically powering the panel.

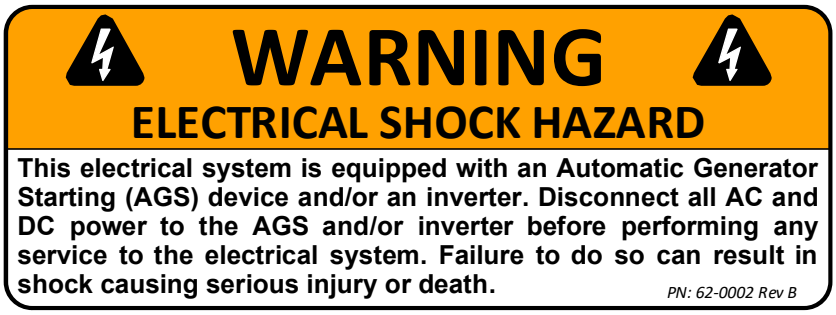

Figure 2-15, Warning Label

2.8 RV-C Communication Connection Port

The MSH3012RV inverter/charger has a RV-C connection port (Figure 1-1, Item 5). This connection port is used to communicate with RV-C compliant devices that are connected to the RV-C network bus/backbone in the RV (Figures 2-16 and 2-17). Use the information shown in Figure 2-18 to connect the inverters 4-pin RV-C connector to the plug and cable from the RV-C network bus in the RV.

Info: Power needs to be provided to the RV-C connector from the RV-C network bus.

Note: *The RV-C plug and cable are NOT supplied.*

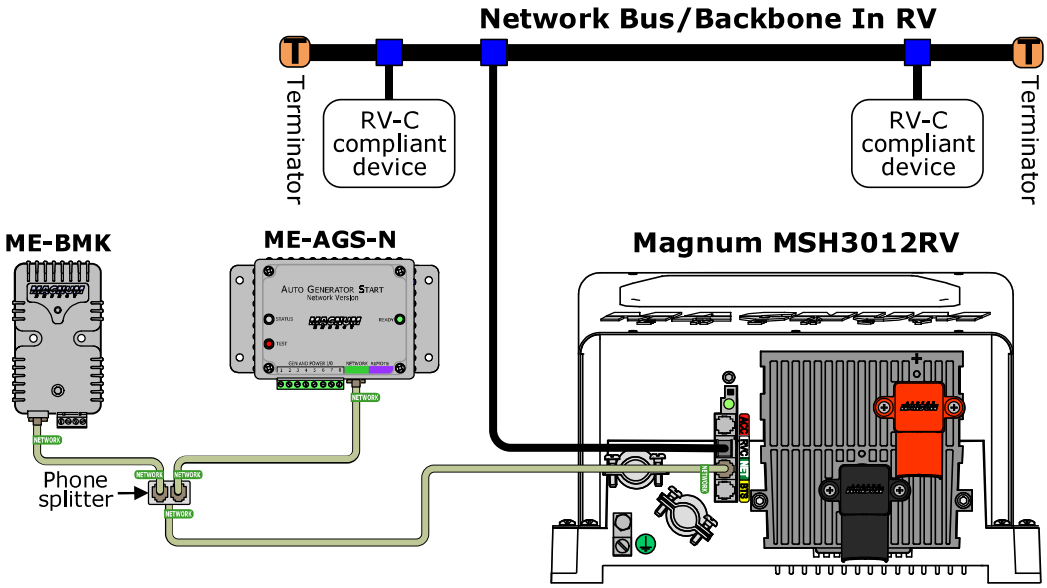

Figure 2-16, RV-C Connections (Single Inverter with Accessories)

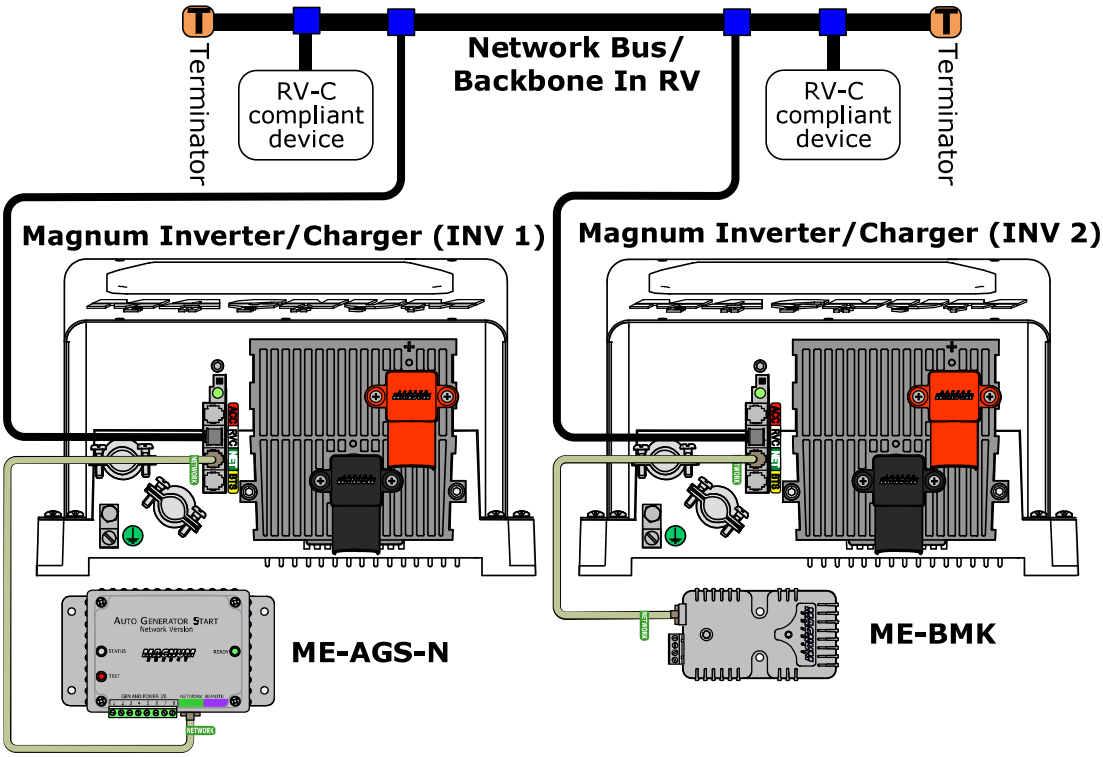

Figure 2-17, RV-C Connections (Two Inverters with Accessories)

Information on the RV-C plug/connector:

- Plug (4-pin) – PN: 39-01-2040 (Molex 5557 Series)
- Crimp-on connectors (female) – PN: 39-00-0039 (Molex 5556 Series)
- Input voltage: 8 VDC – 17 VDC
- Input amperage: 40mA typical, 60 mA Max @12V
- Operating Temperature Range: -20 to 60 Deg C

RV-C Connector (on inverter)

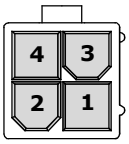

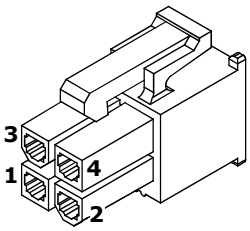

RV-C Plug (cable end)

Pin	Designation
1	CAN_H
2	CAN_L
3	PS–
4	PS+

Figure 2-18, RV-C Connector/Plug Designation

2.9 Final Inspection

1. Verify all cables are secured with wire ties or other non-conductive fasteners to prevent chafing or damage from movement and vibration.
2. Verify strain reliefs or grommets are in place to prevent damage to the wiring where it passes through walls, bulkheads, or other openings.
3. Verify all AC connections are correct and torqued to a maximum of 16 in lbf (1.8 N-m).
4. Replace the covers on the main electrical/distribution panel.
5. Replace the chassis access cover.
6. Verify the inverter's front panel switch is in the "OFF" position.

2.10 Functional Test

After all electrical connections to the inverter, batteries, AC source and sub-panel have been completed, follow these steps to test the installation and the inverter's operation.

CAUTION: Use a multimeter to verify the correct DC voltage for your particular inverter model (i.e., 12-volt battery bank for a 12-volt inverter) and to ensure the polarity of the battery voltage is correct (battery positive connected to the inverter positive terminal and the battery negative connected to the inverter negative terminal).

1. Apply battery power to the inverter by closing the DC circuit breaker. The inverter will remain off, but the green status indicator on the front of the inverter will quickly blink once to indicate that DC power has been connected and the inverter is ready to be turned on.
2. Prior to turning on the inverter, make sure all AC loads (i.e., appliances) are NOT connected to the inverter's output or to any AC outlets powered by the inverter.
3. Lightly press and release the inverter's ON/OFF switch to turn the inverter on. Verify the inverter's status indicator is blinking—indicating the inverter is on.
4. Connect a 10-25 watt light bulb to the inverter output and verify it comes on and shines normally. DO NOT connect anything larger than a 25-watt light bulb until all wiring and voltages are confirmed to be correct.

   Info: The inverter's AC output voltage will not be correct until a load greater than 5 watts (default setting) is connected to the inverter; or, Search mode is turned off with a remote display. A 10-25 watt light bulb is used as it is a sufficient load to bring the inverter out of Search mode and up to full voltage.

5. Check the AC output voltage of the inverter by connecting an AC voltmeter to the output terminals as shown in Figure 2-19 (verify the correct output voltages).
6. Press and release the inverter's ON/OFF switch to turn the inverter off. The inverter's status indicator and the connected load should go off.
7. Apply AC power to the inverter's AC input. After the AC input power is qualified (~15 seconds), the incoming AC power will transfer through the inverter to the inverter's AC output and power the light bulb. Verify that the inverter's status indicator and the light bulb come on.
8. Even though the light bulb is on, the inverter is currently disabled (off). Press and release the ON/OFF switch on the inverter to enable (turn on) the inverter.
9. Disconnect the incoming AC power to the inverter. Verify the light bulb remains on and is now powered by the inverter.

If the inverter passes all the steps, the inverter is ready for use. If the inverter fails any of the steps, refer to the Troubleshooting section in this manual.

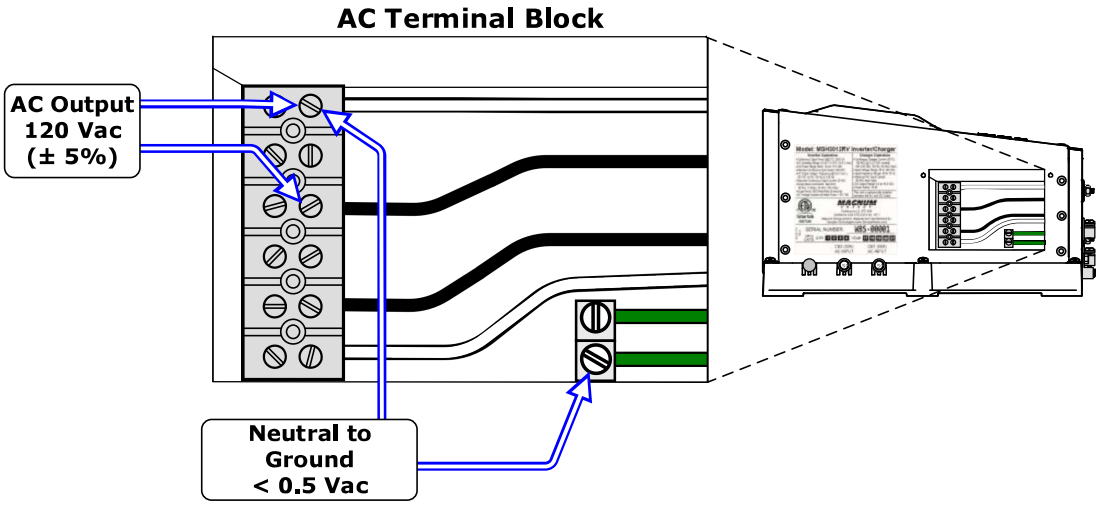

Figure 2-19, AC Voltage Checks

3.0 Operation

The MSH3012RV has two normal operating routines: Inverter mode, which powers your loads using the batteries, and Standby mode, which transfers the incoming AC current (i.e., shorepower power or a generator) to power your loads and to recharge the batteries. This inverter also includes an extensive protection circuitry to shut down the inverter under certain fault conditions.

3.1 Inverter Mode

When the MSH3012RV is first connected to batteries and powered up, it defaults to the OFF mode. The momentary ON/OFF power switch (Figure 1-1, Item 1) must be lightly pressed to turn the inverter ON. Subsequently pressing this switch alternately turns the inverter off and on.

Inverter OFF – When the inverter is off, no power is used from the batteries to power the AC loads, and the status LED will be off. If AC power from an external source (utility/grid power or generator) is connected and qualified on the inverter's AC input, this AC input power passes through the inverter to power the AC loads. However, if this AC power is lost, the AC loads are no longer powered because the inverter is off.

Searching – When the inverter is first turned on, the Search feature is enabled. This feature is provided to conserve battery power when AC power is not required. In this mode, the inverter pulses the AC output looking for an AC load (i.e., electrical appliance). Whenever an AC load [greater than 5 watts (default setting)] is turned on, the inverter recognizes the need for power and automatically starts inverting. When there is no load (or less than 5 watts) detected, the inverter goes back into Search mode to minimize energy consumption from the battery bank.

Info: The factory default value for the Search feature is 5 watts; it can be turned off or adjusted from 5 to 50 watts using a remote control display.

Inverting – When a load greater than 5 watts is connected to the inverter output, the MSH3012RV inverts the DC power from the battery and supplies 120 VAC power to your sub-panel. The inverter's green LED blinks once every second (fast flash) to indicate it is inverting. The amount of time the inverter can be inverting and providing power is directly related to the amount of AC loads that are connected, and the capacity of the battery bank. Refer to Figure 3-1 to see the flow of power from the DC input to the AC output while in Inverter mode.

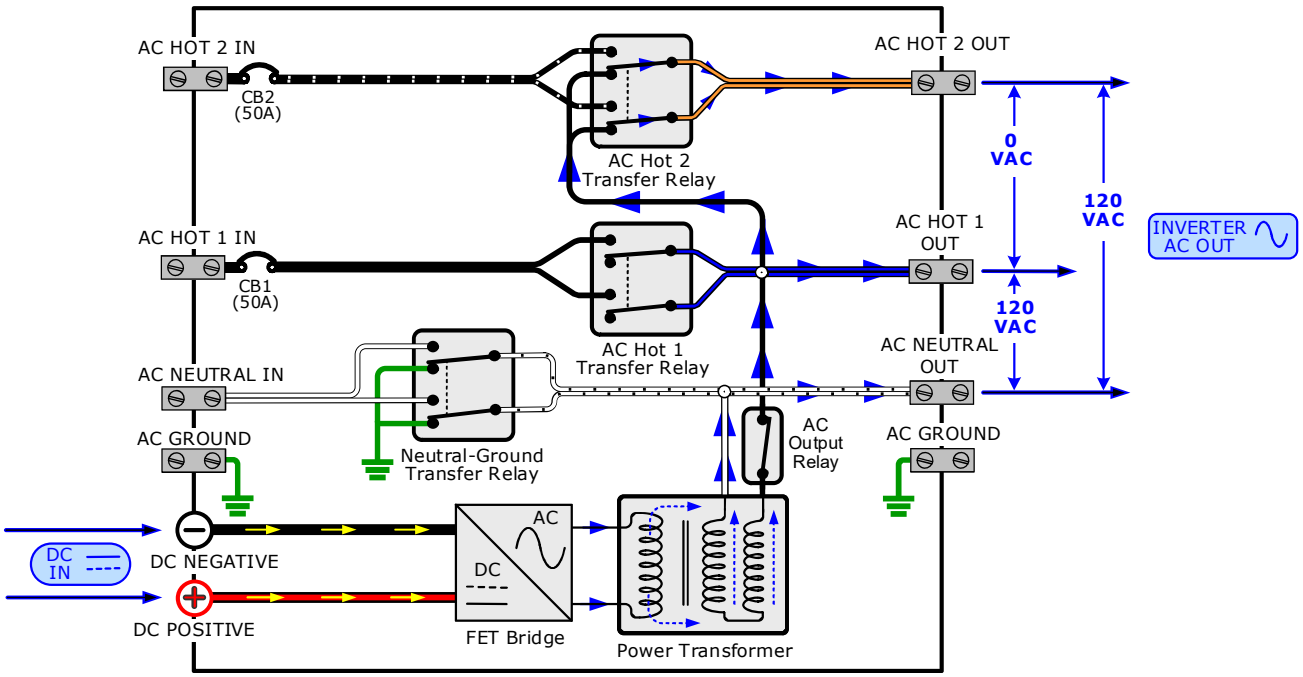

Figure 3-1, Power Flow – Inverter Mode

3.2 Standby Mode

The MSH3012RV features an automatic transfer relay and an internal battery charger when operating in Standby mode. The Standby mode begins whenever AC power (shore power or generator) is connected to the inverter's AC input. Refer to the figures below to see the flow of power from the AC input to the DC and AC outputs while in Standby mode.

When a 120VAC only source is connected to the AC HOT 1 IN terminal (i.e., Single In), this AC source passes-thru to both the AC HOT 1 OUT and AC HOT 2 OUT terminals as shown in Figure 3-2.

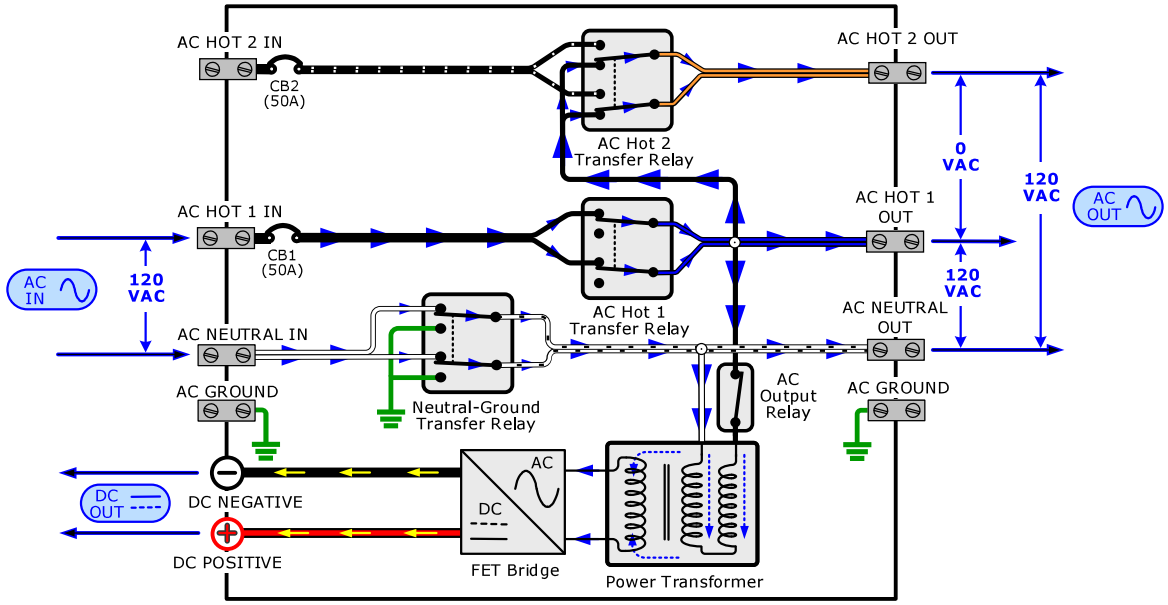

Figure 3-2, Power Flow – Standby Mode (Single In)

As shown in Figure 3-3, when a 120/240VAC split-phase (or 120/208VAC three-phase) source is connected to the AC HOT 1 IN and AC HOT 2 IN terminals (i.e., Dual In), each input will pass-thru to its respective output. There is a delay connecting to the two inputs; this delay is designed to allow better transfer behavior.

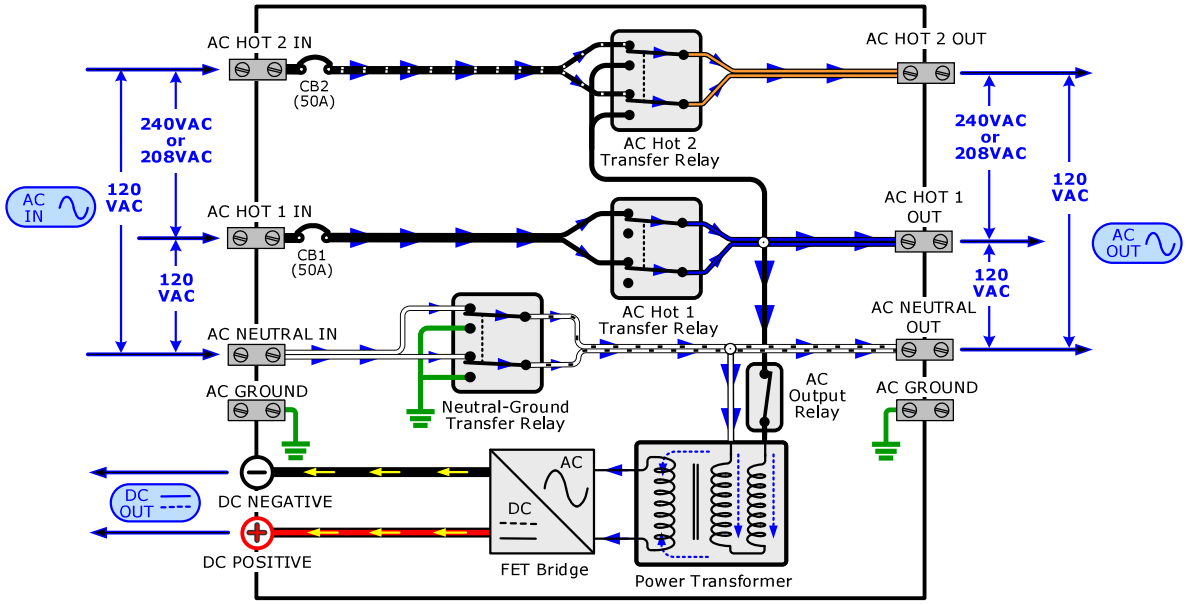

Figure 3-3, Power Flow – Standby Mode (Dual In)

3.2.1 Battery Charging

The MSH3012RV is equipped with a PFC (Power Factor Corrected) and PI (Proportional-Integral) multi-stage battery charger. The PFC feature controls the amount of power used to charge the batteries to obtain a power factor as close as possible to 1 (or unity). This causes the battery charger to look like a resistor to the line (forces the charge current wave shape to mirror the voltage wave shape). The PI feature allows the charger voltage and current to change independently. These two features maximize the real power available from the AC power source (i.e., shorepower or generator), which translates into less power wasted and greater charging capabilities.

When an AC input source is first connected, the inverter begins monitoring for acceptable AC voltage and frequency. Once the AC source is accepted and after the transfer relay has closed, the inverter's battery voltage is monitored to determine the charging stage. If the battery voltage is ≤12.8 VDC, the charger begins Bulk charging. If the DC voltage is >12.8 VDC, the charger will skip the Bulk and Absorb charge stages and go directly to the Float charge stage. However, if the incoming AC power is lost and returns within 2 minutes, the charge mode returns to the charge stage it was in prior to losing AC input—regardless of the battery voltage.

The MSH3012RV's multi-stage charger can use up to five different charging stages to help keep the batteries healthy. The five stages include an automatic 4-stage charging process (see Figure 3-4): Bulk, Absorb, Float, and Full Charge; and a manual Equalization (EQ) charge stage. The automatic 4-stage charge process provides complete recharging and monitoring of the batteries without damage due to overcharging. The EQ stage (requires a remote control display to enable) is used to stir up stratified electrolyte and to reverse any battery plate sulfation that may have occurred—if recommended by your battery's manufacturer.

Bulk Charging: This is the initial stage of charging. While bulk charging, the charger supplies the battery with controlled constant current. The charger will remain in bulk charge until the absorption charge voltage (determined by the Battery Type selection*****) is achieved. The inverter's green LED stays ON (solid) to indicate bulk charging.

Absorb Charging: This is the second charging stage and begins after the absorb voltage has been reached. Absorb charging provides the batteries with a constant voltage and reduces the DC charging current in order to maintain the absorb voltage setting. The inverter's green LED blinks once every second (fast flash) to indicate absorption charging for 2 hours (determined by the Battery AmpHrs selection*****), then switches to float charging.

Float Charging: The third charging stage occurs at the end of the absorb charging time. While float charging, the charge voltage is reduced to the float charge voltage (determined by the Battery Type selection*****). In this stage, the batteries are kept fully charged and ready if needed by the inverter. The inverter's green LED blinks once every 8 seconds (slow flash) to indicate float charging. The Float Charging stage reduces battery gassing, minimizes watering requirements (for flooded batteries), and ensures the batteries are maintained at optimum capacity.

Full Charge (Battery Saver™ mode): The fourth stage occurs after four hours in the Float Charging stage. The Full Charge stage is designed to keep batteries fully charged over long periods, and to prevent excessive loss of water in flooded batteries or drying out of GEL/AGM batteries. In this stage, the charger is turned off and begins monitoring the battery voltage; if the battery voltage drops low (12.7 VDC or less), the charger automatically initiates another four hours in float charge.

Info: While charging, the unit may automatically reduce the charge current to the batteries. This charger back-off feature can be caused by: 1) The internal temperature is too hot—the charger automatically reduces the charge rate to maintain temperature; or 2) The AC input voltage falls below 90 VAC—the charger will stop charging to help stabilize the incoming AC voltage.

Info: If the battery voltage falls to the re-bulk voltage (12.1 VDC) or lower, the unit will begin another bulk charge.

** These settings in the MSH3012RV are changeable and leave the factory with default values (see Table 3-2, Inverter/Charger Default Values). These default values are adequate for most installations, however, if you determine that some of the values need to be changed for your particular system, a remote control may be purchased to adjust these settings.*

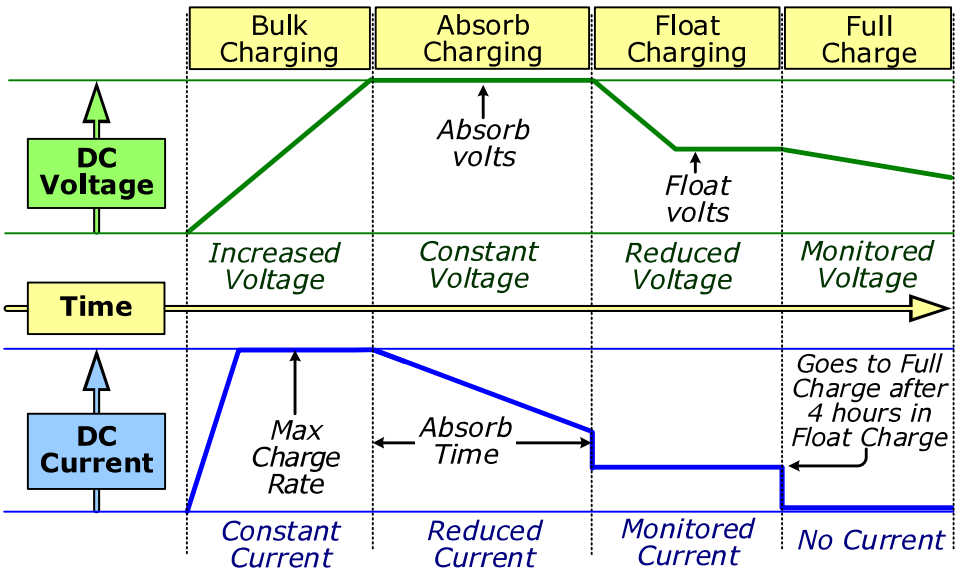

Figure 3-4, Automatic 4-Stage Charging Graph

3.2.2 Transfer

3.2.2.1 Intelligent AC Input Transfer

When switching from Inverter mode to Standby mode, the MSH3012RV qualifies the incoming AC voltage and frequency, and synchronizes to the AC source intelligently[1].

If you connect an AC source with a neutral leg and two hot legs to the MSH3012RV, this power must come from either a split-phase (120/240VAC) or three-phase (120/208VAC) source. When one of these AC sources is connected, the inverter first qualifies the AC voltage and frequency on the AC2 input. Once the inverter verifies that the AC2 input is correctly out-of phase with the AC1 input and after the AC voltage and frequency on the AC1 input has been qualified, the inverter synchronizes and transfers the AC2 input to the AC2 output. After a short delay, the inverter then synchronizes and transfers the AC1 input to the AC1 output and puts the inverter into Standby mode.

If connecting a 120VAC only source, it must be connected to the AC1 input. Once this incoming 120VAC source has been qualified on the AC1 input, the inverter will synchronize and transfer the AC1 input to both the AC1 and AC2 outputs.

Note[1]: *This inverter is designed to transfer the AC1 and AC2 inputs independently to provide a delay in switching between them. This delay allows the phase of the inverter output to synchronize with the phase of the incoming AC source for better transfer to the load.*

3.2.2.2 Transfer Time

When in Standby mode, the AC input is continually monitored. Whenever AC power falls below the VAC dropout voltage (80 VAC, default setting), the inverter automatically disconnects the incoming AC source and transfers back to Inverter mode with minimum interruption to your appliances—as long as the inverter is turned on. The transfer from Standby mode to Inverter mode occurs in approximately 16 milliseconds. While the MSH3012RV is not designed as a computer UPS system, this transfer time is usually fast enough to hold them up.

The VAC dropout setting can affect the ability of the loads to transfer without resetting. The lower this setting, the longer the effective transfer will be and therefore, the higher the probability for the output loads to reset. This occurs because the incoming AC voltage is allowed to fall to a level that is so low that when the transfer does occur, the voltage on the inverter's output has already fallen low enough to reset the loads. The disadvantage of a higher VAC dropout setting is that smaller generators (or large generators with an unstable output) may nuisance disconnect. This commonly happens when powering loads that are larger than the generator can handle—causing the generator's output voltage to constantly fall below the inverter's input VAC dropout threshold.

3.2.3 Load Support

While in the Standby Mode and the charger is enabled, the MSH3012RV inverter/charger has the ability to work in parallel with the incoming AC source (utility or generator power) to power the AC loads using current from the batteries. During the Standby mode, the current and voltage from the AC source and the current used by the AC load are continually monitored. When loads on the inverter output exceed the maximum available current from incoming AC source, the Load Support feature is automatically activated. The Load Support feature causes the MSH3012RV inverter/charger to reduce/stop the battery charging operation and begin using current from the batteries along with the maximum available current from the AC source to ensure the AC loads are powered. The Load Support feature turns off once the load demand decreases and there is sufficient current from the incoming AC source; when this happens, the battery charger is again activated and begins charging the batteries.

For the Load Support feature to automatically function, the following needs to occur:

1. An AC source (utility power/AC generator) must be connected.
2. The inverter must be enabled (INV LED is on).
3. The battery voltage must be ≥0.5 volts above the LBCO setting (10 VDC default).

Info: If using a remote that is able to show the load support status and the unit is in load support, the status will indicate either "Load Support AAC" or "Load Support VDC".

Info: The load support feature of the MSH3012RV can provide 60 amps on its AC output. For example, if the input AC source is 40 amps, load support can add up to 20 amps; if the input is 50 amps, load support can add up to 10 amps of additional current.

Info: The load support feature is monitored thru the AC HOT 1 IN terminal. When the AC HOT 1 IN is the only input connected to the incoming AC source, then load support is provided to the loads connected to both the AC HOT 1 OUT and AC HOT 2 OUT terminals However, if the AC source is connected to both the AC HOT 1 IN and the AC HOT 2 IN terminals [from either a split-phase (120/240VAC) or three-phase (120/208VAC) source], the Load Support feature is only provided and supports the loads connected to the HOT 1 OUT output. In this instance, the AC HOT 2 OUT output is only pass-thru power coming from the AC HOT 2 IN terminal

Info: The input amps (or shore amps) setting on the remote control should be set ≥5 AAC for the load support feature to limit and support the incoming amperage correctly.

There are two modes of operation within Load Support.

- **Load Support AAC** – In this mode, the AC loads connected to the inverter output are requiring more power than the incoming AC source can provide on its own. The inverter pulls the additional current—that is needed for the loads—from the inverter batteries to keep the incoming AC current from exceeding the input amps setting on the remote control.

  Info: In Load Support AAC, even though the LED indicators may indicate charging, the inverter/charger may not be putting current into the battery. If using a remote, the Inverter/Charger Amps AC meter indicates the load support process by displaying negative current flowing from the batteries to the loads. The input amps AC value will also drop during this process, while the load amps AC value remains the same.

- **Load Support VDC** – In this mode, an external DC source (i.e., alternator, solar, etc.,) is causing the battery bank voltage to rise above the temperature-compensated battery voltage setting on the remote control. If this happens, the inverter/charger will reduce the incoming AC current and use current from the batteries to support the inverter load.

  Info: The charger must be enabled (not in 'Charger Standby') and in the Absorb or Float charge mode (with at least a 6-amp inverter load) for the Load Support VDC feature to be active. *Note: Load Support VDC is not active in either the Bulk or EQ charge modes.*

3.3 Current Flow

The following figures show the current flow in the MSH3012RV during different modes:

Inverting – The MSH3012RV inverter converts the current from the battery to power the AC loads.

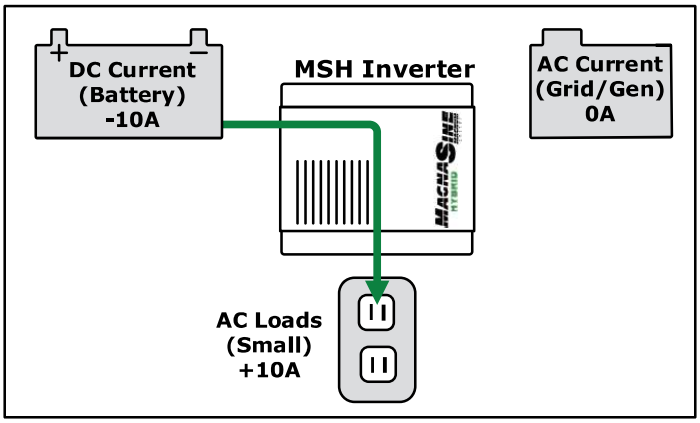

Figure 3-5, MSH3012RV Current Flow – Inverting

Charging and AC Pass-thru – The MSH3012RV inverter uses current from the grid/generator to power the AC loads, and also converts this current to charge the battery.

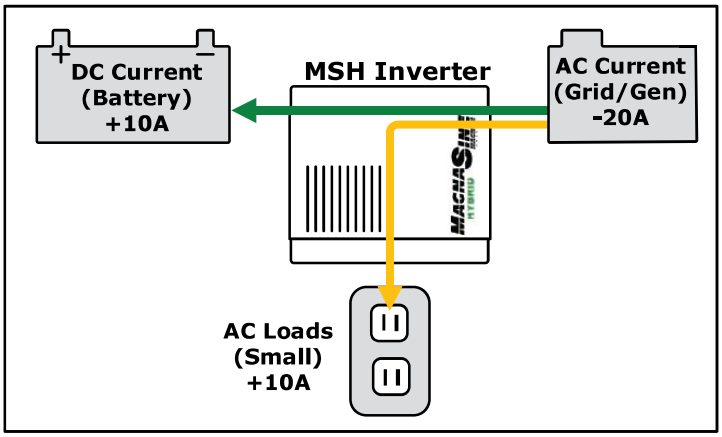

Figure 3-6, MSH3012RV Current Flow – Charging and AC Pass-thru

Charger Back-off – When the AC loads increase, the MSH3012RV inverter reduces or stops the battery charge current to allow the grid/generator to continue powering the AC loads.

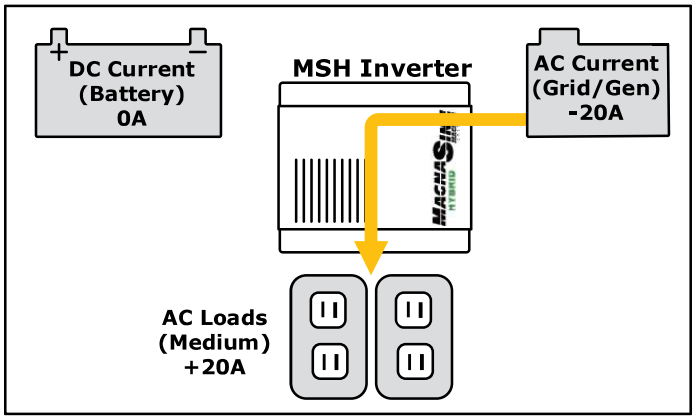

Figure 3-7, MSH3012RV Current Flow – Charger Back-off

Load Support AAC – If AC loads are added that are above the capability of the grid/generator, the MSH3012RV converts current from the battery and combines it with the current from the grid/generator to power the additional AC loads.

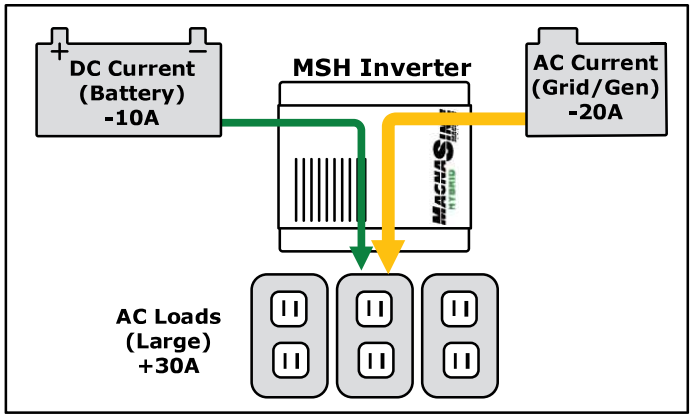

Figure 3-8, MSH3012RV Current Flow – Load Support AAC

Load Support VDC – If the battery is being charged externally (i.e., alternator, solar, etc.), the MSH3012RV reduces the current from the grid/generator, and then converts any excess current from the battery to power the AC loads and to keep the battery from rising.

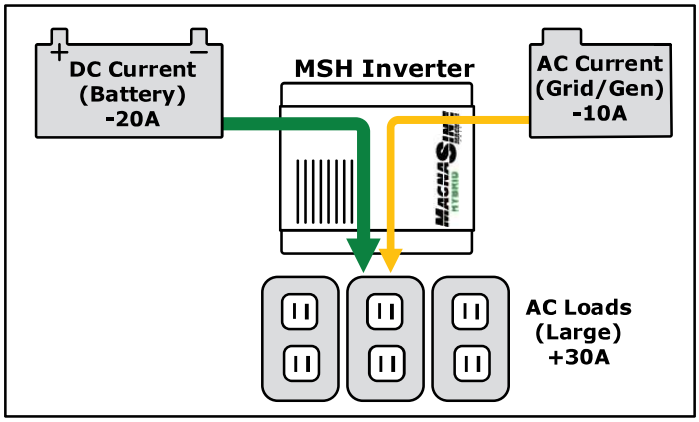

Figure 3-9, MSH3012RV Current Flow – Load Support VDC

3.4 Battery Temperature Sensor Operation

The plug-in Battery Temperature Sensor (BTS) is used to determine the battery's temperature. This information allows the multi-stage battery charger to automatically adjust the battery charge voltages for optimum charging performance and longer battery life.

With a BTS installed, if the temperature around the BTS is below 77°F (25°C) the absorb and float charge voltage increases, and if the temperature around the BTS is higher than 77°F (25°C), the absorb and float charge voltage decreases. See Figure 3-10 to determine how much the charge voltage changes (increases or decreases) depending on the temperature reading of the BTS. For example, the nominal absorb charge voltage for a flooded battery at 77°F (25°C) is 14.6 VDC. If the battery temperature is 95°F (35°C), the absorb charge voltage would decrease to 14.3 VDC (14.6 VDC – 0.3 change).

If the temperature sensor is NOT installed, the charge voltages will not be automatically adjusted because of temperature, but will be maintained at a temperature of 77°F (25°C). The life of the batteries may be reduced if they are subjected to large temperature changes when the BTS is not installed.

Info: When the BTS is connected, the battery charger uses a value of -5mV/°C/Cell from 0 – 50°C to change the charge voltage based on temperature.

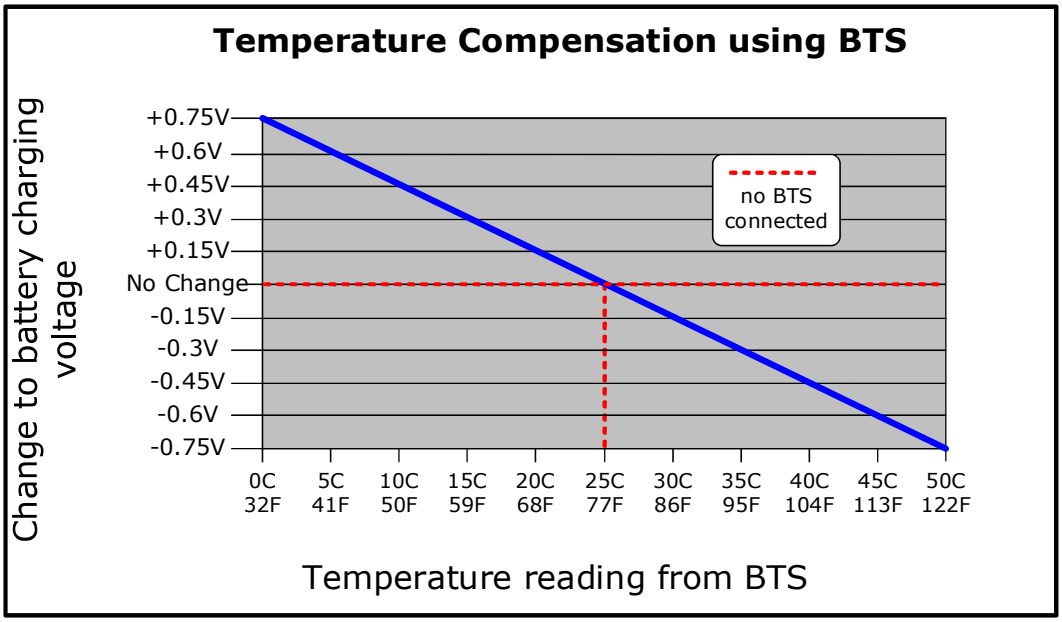

Figure 3-10, BTS Temperature to Charge Voltage Change

3.5 Protection Circuitry Operation

The MSH3012RV inverter is protected against fault conditions and in normal usage it will be rare to see any. However, if a condition occurs that is outside the inverter's normal operating parameters, it will shut down and attempt to protect itself, the battery bank, and your AC loads. If there is a condition that causes the inverter to shut down, it may be one of the following conditions [also refer to the Troubleshooting section (Section 4.3) to help diagnose and clear the fault condition].

Note: *The turn ON/OFF levels noted below are without a remote connected.*

- **Low Battery** – The inverter will shut off whenever the battery voltage falls to the **LBCO** (Low Battery Cut Out) level to protect the batteries from being over-discharged. After the inverter has reached the LBCO level and turned off, the inverter will automatically restart after one of the following conditions:

  1. AC power is applied and the inverter begins operating as a battery charger.
  2. Battery voltage rises to the **LBCI** (Low Battery Cut In) level.

  Refer to Table 3-1 to determine the LBCO and LBCI levels for this inverter.
- **High Battery** – In the event the battery voltage approaches the **HBCO** (High Battery Cut Out) level, the inverter will automatically shut down to prevent the inverter from supplying unregulated AC output voltage. The inverter's status LED turns off when a high battery fault condition occurs. The inverter will automatically restart when the battery falls to the **HBCI** (High Battery Cut In) level. Refer to Table 3-1 to determine the HBCO and HBCI levels for this inverter.

  Info: High battery voltage is when an external charging source (i.e. alternator charging the inverter batteries, the solar panels, etc.) causes the inverter battery bank to rise above 17 volts.
- **Overload** – During inverter and standby operation, the inverter monitors the DC and AC current levels. In the event of a short-circuit or an overload condition for more than a few seconds, the inverter will shut down. To start operating after this fault, the inverter must be restarted (turned back on) once the inverter's AC loads are reduced/removed.
- **Over-temperature** – If internal power components begin to exceed their safe operating temperature level, the inverter will shut down to protect itself from damage. The inverter's status LED turns off to indicate the over-temperature fault condition. The inverter automatically restarts after the unit cools down.
- **Internal Fault** – The inverter continually monitors several internal components and the processor communications. If a condition occurs that does not allow proper internal operation, the inverter will shut down to protect itself and the connected loads. The inverter will need to be reset to start operating—refer to Section 4.4 for information on resetting the inverter.

Table 3-1, Inverter Battery Turn On/Off Levels

Inverter Battery Turn ON/OFF Levels	Inverter Model MSH3012RV (without remote connected)
HBCO	>17.0 VDC
HBCI	16.5 VDC
LBCI	The unit recovers from LBCO when Vbat ≥12.5V
LBCO (1 minute delay)	10.0 VDC [adjustable from 9.0 to 13.0 VDC with remote control]
LBCO (immediate)	8.5 VDC

3.6 Inverter Startup

ON/OFF Switch – The inverter can be turned on and off by lightly pressing and releasing the Power ON/OFF switch on the front of the inverter (refer to Figure 3-11). When the inverter is first connected to the batteries, or when its automatic protection circuit has turned the inverter off, the ON/OFF switch will need to be pressed to start the unit (or reset per Section 4.4). Once the inverter has been turned on, pressing the Power ON/OFF switch alternately turns the inverter on and off.

WARNING: The Power ON/OFF switch does not turn on or off the charger feature, or remove pass-thru power. If AC power (shorepower or generator) is connected and qualified on the AC input, this AC power will also be available on the AC output and is not controlled by the Power ON/OFF switch.

Inverter Status LED Indicator – The status indicator for the inverter is a green LED (Light Emitting Diode) that provides information on the operational mode of the inverter. Watch this indicator (refer to Figure 3-11) for at least 10 seconds to determine the inverter's operational condition from the information below:

- **Off** – Indicates the inverter is off—there is no AC power (inverter, shorepower, or generator) at the inverter's output terminals. If the LED stays off after pressing the ON/OFF switch, there is a fault condition such as: low battery, high battery, overload, over-temperature, or an internal fault. Refer to the Troubleshooting section to help diagnose the fault condition.
- **Slow Flash** (blinks on for 4 seconds, then off for 4 seconds) – Indicates the batteries are float charging and the inverter is in Standby mode (any external AC power that is connected to the inverter's input is passing through the inverter and powering the inverter's AC loads).
- **Medium Flash** (blinks on once every two seconds) – Indicates the inverter is Inverting, using energy from the battery and providing full power to connected loads.
- **Fast Flash** (blinks on once every second) –
  When AC power <u>is not</u> connected to the inverter's input: Indicates the inverter is Searching—conserving power and waiting for a load to be turned on that meets or exceeds the *Search Watts* parameter (5 Watts = default setting).
  When AC power is connected to the inverter's input: Indicates absorb charging, and the inverter is in Standby mode (external AC power connected to the inverter's input is passing through the inverter and is powering the AC loads connected to the inverter's output).
- **Very Fast Flash** (blinks on/off very quickly—flutters) – Indicates the inverter is in EQ charge mode (requires remote to enable), or the inverter is continuously in reset. If a remote was not used to enable the equalize charge, then the inverter is likely in reset. Refer to the Troubleshooting section to help diagnose/clear the fault condition.
- **On** (solid) – Indicates bulk charging, and the inverter is in Standby mode (the external AC power that is connected to the inverter's input is passing through the inverter and is powering the AC loads connected to the inverter's output).

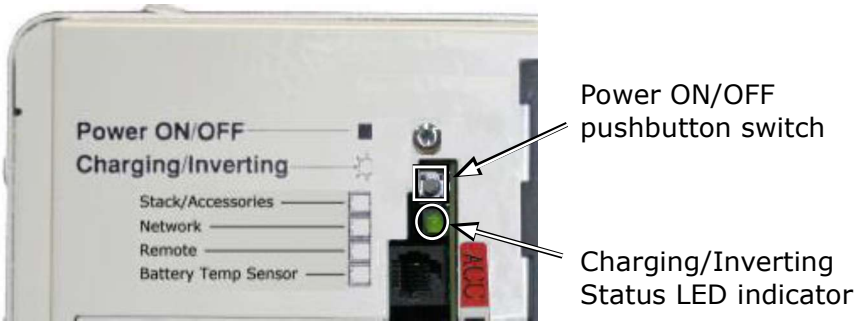

Figure 3-11, Power Switch and Status Indicator

3.7 Factory Default Values

The MSH3012RV inverter/charger uses default values for the adjustable settings (shown in Table 3-2) that are adequate for most installations. If some of the operating parameters need to be changed from the default values, an optional remote control/display can be used to make those changes. To determine if you need a remote display, information on the inverter/charger settings that can be changed is provided below. Once programmed, the settings are saved in the remote's non-volatile memory and are preserved until changed—even if DC power to the inverter is lost (as long as the remote is connected). See Section 3.9 for additional information.

For information on the full range of settings for each function in your remote, refer to its owner's manual at **www.DMX-Power.com**.

- **Shore Max/Input Amps:** This setting ensures the inverter AC loads receive the maximum current available from shorepower or a generator. When the total current used to power the AC loads and charge the batteries begins to approach the *Shore Max/Input Amps* setting, the current that was used for charging the batteries will automatically be reduced.
- **Search Watts:** This setting allows you to turn off the power-saving Search mode circuitry, or to adjust the power level at which the inverter will "wake up" and start inverting.
- **LowBattCutOut:** This setting determines when the inverter will turn off based on low battery voltage. The inverter turns off automatically after the battery voltage has been below this setting for more than one minute. This protects the batteries from over-discharge and the AC loads from unregulated power (brown-outs).
- **Absorption Time:** This setting allows the user to determine how long to charge the batteries in the Absorb Charge stage.
- **Battery Type:** Sets the type of batteries being used in the system. This information tells the charger what voltage level to use to charge the batteries.
- **Charge Rate:** This setting can be used to turn off the charger, limit the amount of current that the charger can use (leaving more current available to power loads), or to ensure small battery banks are not overheated because of a charge rate that is too high.
- **VAC Dropout:** Sets the minimum AC voltage that must be present on the AC input before the unit transfers from Standby mode to Inverter mode. This protects the AC loads from shorepower outages and brown-outs.

Using a remote display also allows you to enable an equalize charge for certain battery types, displays inverter/charger's operating status, and provides fault information for troubleshooting.

The table below provides the inverter's default settings—without a remote control connected. If a remote is connected, the remote settings are saved in the inverter—even if the remote is disconnected—until all power to the inverter is removed.

Table 3-2, Inverter/Charger Default Values

Adjustable Settings	Default Values
Shore Max/Input Amps	50 Amps
Search Watts	5 Watts
LowBattCutOut	10 VDC (one min. delay), 8.5 VDC (no delay)
Absorption Time	600 AmpHrs (Absorb Time = 120 minutes)
Battery Type	Flooded – Liquid Lead Acid: Absorb = 14.6 VDC, Float = 13.4 VDC
Charge Rate	100%
VAC Dropout	80 VAC (input 1) / 80 VAC (input 2)

3.8 Using the RV-C Connector

Magnum inverters and accessories normally communicate using proprietary MagNet serial data thru the NETWORK port. On the MSH3012RV inverter, this MagNet data is converted internally to RV-C compliant protocol and provided through the RV-C connector. This allows the RV-C connector to be connected to a RV-C network in your coach, so that you can monitor and control this inverter and its connected accessories with your coach's RV-C compliant display.

Note: *The MSH3012RV inverter can only receive settings and commands from one device (i.e., RV-C device or Magnum remote) at a time.*

3.8.1 LED Indicator

Use the RV-C's LED indicator—located just above the RV-C connector port (see Figure 3-12)—to determine the status of the RV-C port. When power is first applied to the inverter, the RV-C status indicator (yellow LED) comes on for 2 seconds, then goes off.

When the RV-C connector port is connected to an active RV-C network bus/backbone, the inverter's RV-C port becomes active. When the RV-C port is active, the RV-C status indicator will blink. Use Table 3-3 below and the RV-C port indicator to determine the RV-C port's operation.

Note: *The RV-C status LED will only come on/blink if the MSH3012RV is connected to an active RV-C network.*

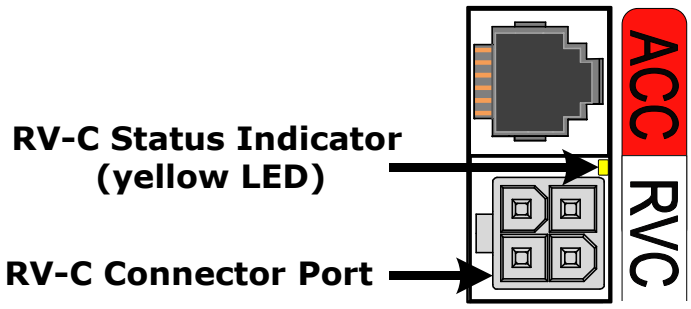

Figure 3-12, RV-C Port Status Indicator

Table 3-3, Operating Status For RV-C Port

LED	Operating Status
Blinks*	When the RV-C status indicator continuously blinks and pauses, the RV-C port is active and able to communicate on the RV-C network.
OFF	The RV-C port is not active and is not detecting data or power from the RV-C network.
The RV-C status indicator (yellow LED) will rapidly blink and pause continuously as described below to indicate which address it has been assigned:	
1 blink, then a pause*	Normal operation and the inverter has been assigned with address #1 on the RV-C network bus
2 blinks, then a pause*	Normal operation and the inverter has been assigned with address #2 on the RV-C network bus

Note*: *LED (yellow) blink = Rapidly blinks on and off (0.2 seconds on and 0.2 seconds off); pause = 1 second off.*

3.9 Conditions for Saving (Non-Default) Settings

When the MSH3012RV is first connected to battery power, it uses its factory default settings (see Section 3.7) to perform the inverter and charger functions. However, this inverter will save settings[1] from a RV-C network (or from a remote control) and use these newly saved settings—instead of the original factory default settings—when connected in another RV-C network.

These newly saved RV-C settings are retained—even if all power is removed from the inverter or a reset of the inverter is performed—and used when connected to an RV-C network, until newer settings are received from the RV-C network.

Note 1: *Saved Settings = Battery Type, Battery Size, Charge Rate, Shore/Input Amps, LBCO.*

Info: The inverter will use its factory default settings (or remote control settings) when not connected to a RV-C network.

Info: This inverter has the ability to receive settings and commands from only one device at a time. If both a RV-C network and remote control are connected to the inverter at the same time, both can receive information from the inverter, but the inverter will only receive settings and commands from the remote control.

3.10 Assigning Addresses to the MSH3012RV Inverter

Each inverter on the same RV-C network must have its own unique address number so that the network can communicate with the inverters individually. When installing the MSH3012RV inverter to an active RV-C network, it will automatically be assigned an address (normally #1). If another MSH3012RV inverter is later connected to the same RV-C bus network, it will be automatically assigned the next address (normally address #2). However, if two inverters are connected to the same RV-C network at the same time, they both may be automatically assigned as address #1. In order to assign address #2 to one of the inverters, follow the procedure in Section 3.10.1.

3.10.1 Assigning Address #2 to the MSH3012RV Inverter

While both inverters are connected to the RV-C network, perform a soft reset (as described below or in Section 4.2.1) on the inverter that you want to assign to address #2.

To perform a soft reset:

1. Press and hold the Power ON/OFF pushbutton (see Figure 4-1) until the Charging/Inverting Status LED (green) blinks very rapidly (i.e., flutters) - this takes approximately 10 seconds
2. Once the Status LED (green) begins to blink rapidly (i.e., flutters), release the Power ON/OFF pushbutton and verify that the Status LED goes off after the pushbutton is released. This inverter should now be automatically assigned as address #2 and can be confirmed by verifying that the RV-C LED indicator (yellow) is blinking twice with a 1-second pause.

Note: *Allow at least 10 seconds after a soft reset for the inverter to reassign the address and start blinking.*

Info: To reassign an inverter back to address #1, remove all inverters from the RV-C network except for the one you want to reassigned as address #1. Then perform an inverter soft reset on the inverter that remains on the RV-C network (see Section 4.2.1).

3.11 Troubleshooting the RV-C Port

Once the MSH3012RV inverter is powered-up, verify the RV-C status LED (yellow) is blinking to indicate its address number.

a. If the LED is not blinking: 1. Check that the LED is not bad by removing all power from the MSH3012RV, then reconnect battery power and watch the RV-C LED; it should come on for two seconds, then go out. 2. The inverter is not powered and/or not connected to an RV-C network.

b. The inverter is not able to communicate with the RV-C network: Check that the RV-C cable that is connected to the inverter is receiving data and power from the network bus. Remove the RV-C cable from the inverter's RV-C connector and plug this cable into a different RV-C compliant device to ensure that device works with this cable. Ensure that the voltage from pins 3 and 4 (see Figure 2-18) is 8 to 17 volts DC.

3.12 Inverter Fan Operation

The inverter contains two internal cooling fans that are automatically controlled. The speed of these fans is determined either by the internal temperature of the inverter or by the load on the inverter. The inverter's fans will come on under the conditions listed below:

- Fans run full speed if the internal transistors (FETS) or the power transformer reaches 176°F (80°C), or the inverter is running at 100% of its rated load.
- Fans run medium speed if the internal transistors (FETS) or the power transformer reaches 140°F (60°C), or the inverter is running at 50% of its rated load.
- Fans run low speed when the inverter is running at 25% of its rated load.

The fans shut down if none of the above conditions are met, or if the battery voltage is < 9.5V. Whenever the inverter is first connected to the battery, the fans start for about one second.

Info: The inverter's fans will not come on based on temperature sensed by the optional Battery Temperature Sensor.

3.13 Using a Remote with the MSH3012RV Inverter

The MSH3012RV inverter when connected to a ME-RC or ME-ARC remote has additional features. The inverter and remote communicate with each other to allow these features to be set up or enabled. However, if the remote has a software revision that was developed after the inverter's software, some of the newest features and functionality in the remote may not work with your inverter.

Info: If using a remote control (i.e., ME-RC or ME-ARC), plug the remote cable into the Network (green label) port on the MSH3012RV inverter/charger.

Note: *If using a remote control, you can NOT use the RV-C connector port to communicate with the inverter. The MSH3012RV inverter will only communicate with the remote control if connected.*

Use the steps below to determine what remote menus/features are available with your inverter:

1. Obtain your inverter's software revision.
   Note: *To view the inverter's software revision level, push the TECH button on your remote and access the Revisions menu.*
2. Use the chart below to determine the inverter's compatibility level (L1, L2, L3, L4 or L5) based on your inverter's software revision.

Table 3-4, Inverter Compatibility Level

INV/CHG Models	Level 1 (L1)	Level 2 (L2)	Level 3 (L3)	Level 4 (L4)	Level 5 (L5)
MSH3012RV	NA	NA	NA	≥ Rev 1.4	≥ Rev 1.9

3. After determining the inverter's compatibility level, refer to the remote's compatibility matrix (find it online at: www.DMX-Power.com) to determine which remote features/settings you can use based on your inverter's compatibility level.
   Note: *If your inverter's compatibility level is the same or greater than the 'Inverter Model/Level Required' on the remote compatibility matrix on our website, then your inverter can support the device setting/feature. If your inverter does not have the required compatibility level for a feature/setting you want, contact DMX Power to see if there are any software upgrade options.*

4.0 Troubleshooting

4.1 Troubleshooting Chart

The MSH3012RV inverter/charger is a fairly simple device to troubleshoot. The following chart is designed to help you quickly pinpoint the most common inverter/charger failures.

Table 4-1, MSH3012RV Inverter/Charger Troubleshooting

Symptom	Possible Cause	Recommended Solution
No output power. Inverter LED is OFF.	Inverter is switched OFF.	Switch the inverter ON.
	Battery voltage is too low. The battery voltage level has dropped below the Low Battery Cutout (LBCO) set-point for more than one minute.	Check fuses/circuit-breakers and cable connections. Check battery voltage at the inverter's terminals. Your batteries may need to be charged, this fault condition will automatically clear when the battery voltage exceeds the LBCI voltage.
	The battery voltage is too high. The inverter automatically resets and resumes operation when the battery voltage drops to the HBCI voltage or lower.	This condition usually only occurs when an additional charging source (alternator, solar panels, or other external charging sources) is used to charge the battery bank. Reduce or turn off any other charger to the inverter batteries to allow the voltage level to drop.
	Over-temperature condition: the internal temperature of the inverter has risen above acceptable limits; caused by loads too great for the inverter to operate continuously, or by lack of ventilation to the inverter. When the unit has cooled, it will automatically reset and resume operation.	Reduce the number of electrical loads that you are operating, this will avoid a repeat over-temp shutdown if the cause was too many loads for the ambient conditions.
		Check ventilation around the inverter, ensure cool air is available to pass through the inverter (refer to the ventilation requirements in Section 2.1.3).
	AC overload condition: the inverter has turned off because the connected loads are larger than the inverter's output capacity, or the output wires are shorted.	Reduce the AC loads connected to the inverter, or remove all AC output wiring and restart the inverter.
	Internal fault: this fault occurs when an internal fault is detected.	To clear this fault, an inverter reset is required, see Section 4.4 to perform an inverter reset.
No output power. Status LED is flashing ON once every second.	Unit is in Search mode, which means load is too small for Search mode circuit detection.	Turn on a load greater than 5 watts to bring inverter to full output power.
No output power. Status LED is flashing very quickly—fluttering.	Unit is in continuous reset.	Check that the inverter Power ON/OFF switch is not stuck in the ON position (ensure you can feel a click when pushing). If not, the inverter requires repair/service.

Table 4-1, MSH3012RV Inverter/Charger Troubleshooting (Continued)

Symptom	Possible Cause	Recommended Solution
Low output or surge power. Green LED is flashing.	Loose or corroded battery cables.	Clean and tighten all cables.
	Low batteries.	Recharge or replace batteries.
	Loose AC output connections.	Tighten AC output connections.
	Battery cables are the wrong length or gauge.	Verify recommended cable lengths and gauges from the manual. Replace cables as necessary.
Low charging rate when connected to AC power.	Charge rate backing off due to high temperature inside inverter.	Provide better inverter ventilation/cooling, or additional battery chargers may be needed if battery bank is very large.
	Low AC input voltage (<90 VAC).	Check AC input wiring.
	While charging, the unit may go into charger back-off protection, which automatically reduces the charge current to the batteries. This is caused by: 1) The internal temperature is too hot—the charger automatically reduces the charge rate to maintain temperature; or 2) The AC input voltage falls below 90 VAC—the charger will stop charging to help stabilize the incoming AC voltage.	
Low charging rate when using a generator.	Generator output is too low to power both load and charger.	Reduce the load or obtain a larger generator.
Charger does not charge.	Loose or corroded battery cables.	Clean and tighten battery cables.
	Defective batteries or blown fuse in-line from inverter to batteries.	Load test batteries and/or check fuse.
	Wrong or no AC input to the AC HOT IN 1 terminal.	Verify proper AC input voltage (105 - 140VAC) and frequency (50-70 Hz).
	Check AC input breaker (CB1) on inverter	Push on breaker to ensure it has not opened.
The inverter will not connect to the incoming AC source on the AC 2 IN terminal.	The AC source connected to the AC HOT 2 IN terminal will not be accepted if it is in-phase with the AC source on the AC HOT 1 IN terminal. A neutral and two legs from an AC source is connected to the NEUT IN, AC HOT 1 IN and AC HOT 2 IN terminals; and must be from a split-phase source (120/240 VAC) or from a three-phase source (120/208 VAC WYE).	
While charging, the DC charge voltage is higher or lower than expected.	If the Battery Temperature Sensor (BTS) is installed, the DC voltage will increase or decrease depending on the temperature around the BTS.	This is normal; see Section 3.5 (Battery Temperature Sensor Operation) for more information.

4.2 Resetting the Inverter

Under some fault conditions (e.g., an internal fault), the inverter will need to be reset. Ensure all AC power (utility, generator, shorepower) is removed from the inverter's input before resetting.

CAUTION: If AC is connected while performing an inverter reset, damage may occur.

4.2.1 Performing an Inverter Reset

To perform an inverter reset (also known as a "soft reset"):

1. Press and hold the Power ON/OFF pushbutton (see Figure 4-1) for approximately fifteen (10) seconds until the Charging/Inverting Status LED comes on and blinks rapidly.
2. Once the rapid flashing has begun, release the Power ON/OFF pushbutton. The Status LED will go off after the pushbutton is released.
3. After the inverter reset is completed, press the ON/OFF pushbutton to turn the inverter on.

If the inverter reset fails, you will need to perform a power reset using the procedure below. In either case, if an internal fault does not clear, the inverter will require repair at an Authorized Service Center (ASC).

Info: The Power ON/OFF pushbutton is a small momentary type switch which operates by lightly pressing and releasing. Be careful not to apply too much force when pushing or the switch might break.

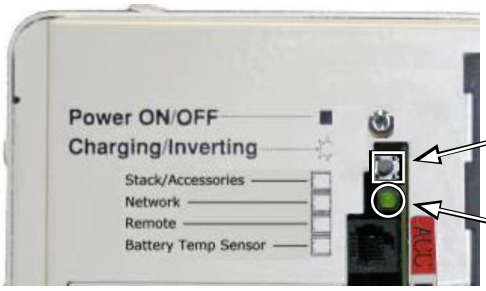

1. Press and hold the Power ON/OFF pushbutton.

2. Watch the Charging/Inverting Status LED. After approximately 10 seconds it should come on and flash rapidly to indicate the inverter has reset. The Status LED will go off after the pushbutton is released.

Figure 4-1, Performing an Inverter Reset

4.2.2 Performing a Power Reset

To perform a power reset (also known as a "hard reset"):

1. Open the inverter's positive DC disconnect (or disconnect the positive battery cable to the inverter).

   CAUTION: If removing all battery power (positive and negative) to the inverter, do not remove the DC negative connections to the inverter or any accessory until after all positive battery connections have been disconnected. This will prevent damage to the inverter or to any network connected accessory.

2. Ensure the inverter(s) and the remote are disconnected from all AC and DC power (the remote display will be blank).
3. After the inverter(s) has been disconnected from all power for 30 seconds, reconnect the inverter DC disconnects (or reconnect the positive battery cable) and resume operation.

   Info: If DC disconnects are not used, there may be a momentary spark when the positive battery cable is connected to the inverter's terminal. This is normal and indicates that the inverter's internal capacitors are being charged.

Appendix A – Specifications and Optional Equipment

A-1 Inverter/Charger Specifications

Model	MSH3012RV
Inverter Specifications	
Input battery voltage operating range	9.0 to 17.0 VDC
Input battery voltage range for full output power	10.4 to 17.0 VDC
AC Output Voltage Accuracy (at 12.6 VDC)	120 VAC ±3% (≤ continuous power)
Output frequency and accuracy	60 Hz ± 0.05 Hz
Total Harmonic Distortion (THD)	< 5%
Max Continuous power output (at 25°C)	3000 VA
Max Continuous AC output current (Invert mode)	25 A (inverting from battery)
Max Continuous AC output current (Standby mode)	60 A (pass-through + load support)
1 msec surge current (amps AC)	85
100 msec surge current (amps AC)	45
5 sec surge power (real watts)	3500
30 sec surge power (real watts)	3500
5 min surge power (real watts)	3400
30 min surge power (real watts)	3100
Maximum continuous input current	400 ADC
Inverter efficiency (peak)	88.0%
HBCO/HBCI (High Battery Cut Out/In)	17.1 VDC /16.5 VDC
LBCO/LBCI (Low Battery Cut Out/In)	9.0 VDC (adj) / 12.5 VDC
Inverter stacking (series or parallel)	No
AC relay transfer time (minimum)	<16 msec
Power consumption – searching	10 watts
Power consumption – inverting (no load)	36 watts
Output waveform	Pure Sine Wave
Charger Specifications	
Continuous charger output at 25°C	125 ADC
Input current for continuous rated output	18 AAC
Maximum current during load support	224 ADC from battery
Charger efficiency	86%
AC input frequency range	50 to 70 Hz
AC input voltage range (remote setting dependent)	120 VAC nominal (65 to 140 VAC)
Power factor	> 0.95
General Features and Capabilities	
Transfer relay capability	50 AAC maximum each input (2 inputs)
Five-stage charging capability	Bulk, Absorb, Float, Equalize (requires remote), and Battery Saver™
Battery temperature compensation	Standard with available temp sensor connected (battery temp 0 – 50 °C)
Internal cooling	0 to 120 cfm variable speed drive using dual 92 mm brushless DC fan
Internal protection	Over-current protection and multipoint over-temperature protection
RVIA "RV-C" (CAN) compliant	Yes, with electrically isolated CAN port - supports up to 2 inverters per network
Corrosion protection	PCB's conformal coated, powder coated chassis/top, and stainless steel fasteners
Safety listings	ETL listed to UL/cUL 458, CSA C22.2 No. 107.1-01
Environmental Specifications	
Operating temperature	-4°F to +140°F (-20°C to +60°C)
Non-operating temperature	-40°F to +158°F (-40°C to +70°C)
Operating humidity	0 to 95% RH non-condensing
Physical Specifications	
Unit dimensions (length x width x height)	13.75" x 12.65" x 8.0" (34.9 cm x 32.1 cm x 20.3 cm)
Shipping dimensions (l x w x h)	19" x 17" x 13" (48.3 cm x 43.2 cm x 33 cm)
Mounting	Shelf or wall (vents can not face downward unless ME-CB or MPX-CB installed)
Weight	Unit: 55 lbs (24.9 kg) / Shipping: 63 lbs (28.6 kg)
Max operating altitude	15,000 ft (4570 m)

Specifications @ 25°C – Subject to change without notice.

A-2 Inverter Charts

A-2.1 Inverter Efficiency

The following curves (A-1) is plotted to show the efficiency of the MSH3012RV over the full power range and is displayed as a percentage. This graph represents the inverter's efficiency while operating resistive loads. Motors and other inductive loads run less efficiently due to the impact of power factor losses.

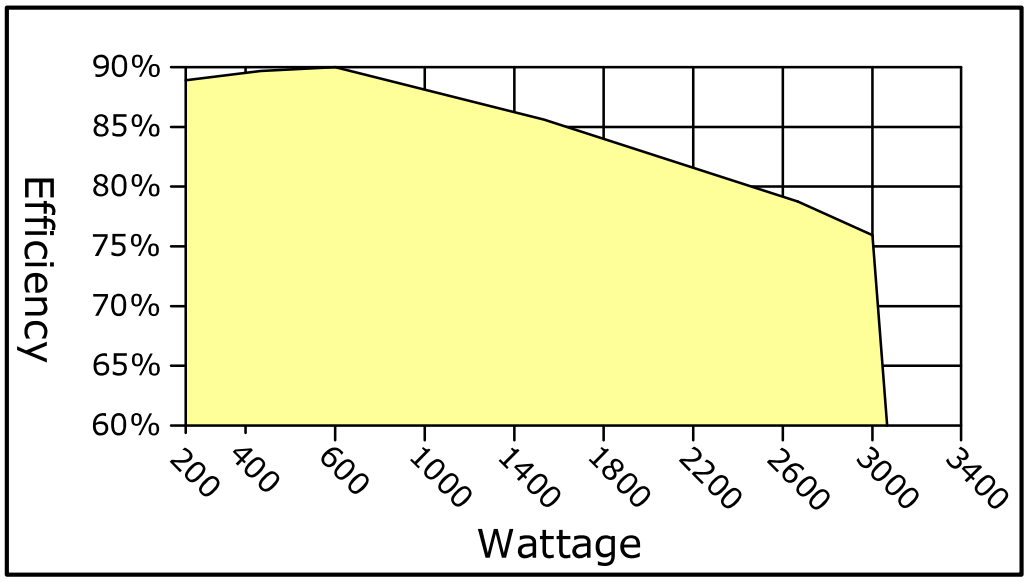

Figure A-1, MSH3012RV Efficiency Chart

A-2.2 Temperature and Inverter Output

The following curve (A-2) is plotted to show the MSH3012RV inverter's continuous output power at different ambient temperatures.

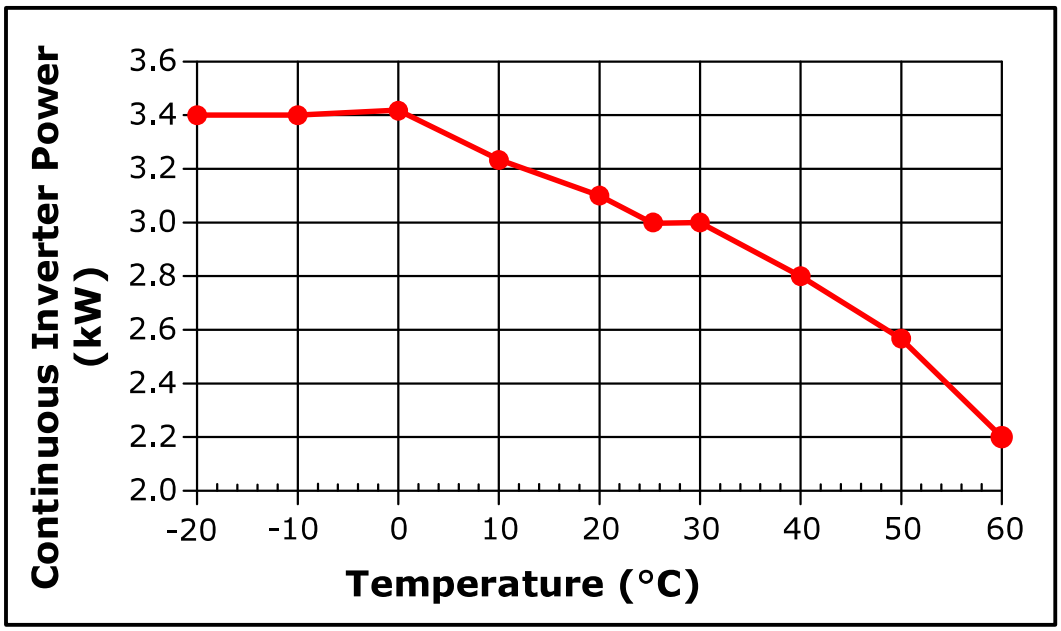

Figure A-2, Temperature to Continuous Inverter Output Power

A-2.3 Temperature and Charger Output

The following curve (Figure A-3) is plotted to show the MSH3012RV charger's continuous output current as the ambient temperature rises.

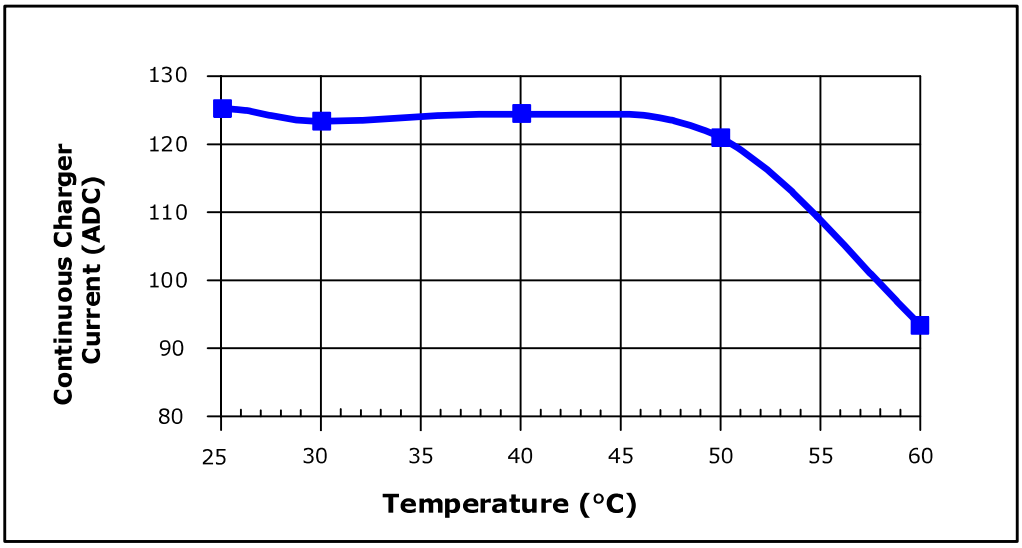

Figure A-3, Temperature to Continuous Charger Output Current

A-3 Inverter AC Fault Current

The following table is provided in accordance with CSA C22. No. 107.1-2017, Clause 10.4.5.

Table A-1, AC Output Fault Current - Inverter Mode

Test Condition	Max Output Fault Current	Peak Duration	3-Cycle RMS Value
Output Short Circuit	240.5 Amps Pk-Pk	1.45 mSec	76.08 Amps

A-4 Optional Equipment and Accessories

The following DMX Power components are available for use with the MSH3012RV.

Standard Remote Control

The ME-RC remote control panel uses an LCD screen and at-a-glance LEDs display for complete inverter/charger status. Soft keys provide simple access to menus, and a rotary encoder knob allows you to scroll through/select a wide range of settings.

Advanced Remote Control

The ME-ARC remote control panel uses an LCD screen and at-a-glance LEDs to provide operating information and allow advanced features to be configured (requires an inverter with advanced configurable features).

Auto Generator Start Controller

The ME-AGS-N Automatic Generator Start controller (Network version) is designed to automatically start a wide range of generators based on low battery condition or high temperature. Adjustable settings when using the ME-ARC include starting the generator based on battery voltage, time of day, battery State of Charge, or high temperature.

Battery Monitor Kit

The ME-BMK Battery Monitor Kit is a single battery bank amp-hour meter that monitors the condition of the battery, provides information to let you know how much energy you have available, and lets you plan your electrical usage to ensure the battery is not being over-discharged. Order Part Number: ME-BMK-N to receive the battery monitor without the 500A/50mv DC shunt.

Appendix B – Battery Information

B-1 Battery Location

Periodic maintenance (i.e., checking connections, cleaning, watering) on batteries is required. Locate the batteries in an accessible location to perform this maintenance.

Batteries must be mounted in a clean, dry, ventilated environment where they are protected from high and low temperatures. The battery bank should be located as close to the inverter as possible without limiting access to the inverter's disconnects. Longer battery cable runs tend to lose efficiency and reduce the overall performance of an inverter.

To ensure optimum performance, a ventilated battery enclosure is recommended. Two feet of clearance above the batteries is recommended for access to the battery terminals and removable caps (lead acid battery types).

WARNING: Be very careful when working around batteries, they can produce extremely high currents if they are short-circuited. Read the important safety instructions at the beginning of this manual and the precautions from the battery supplier before installing the inverter and batteries.

CAUTION: Do not mount the batteries beneath the inverter (or in the same compartment). Batteries emit corrosive fumes which could damage the inverter's electronics. Never locate dedicated batteries near a fuel tank containing gasoline or propane.

B-2 Battery Types

Batteries are available in different sizes, amp-hour ratings, voltage and chemistries. They are also available for starting applications (such as an automobile starting battery) and deep discharge applications. Only the **deep cycle** types are recommended for inverter applications; using a starting battery in an inverter (deep cycle) application will greatly shorten their useful life. Choose the batteries best suited for the inverter installation and cost. Use only the same battery type for all batteries in the bank. For best performance, all batteries should be from the same lot and date. This information is usually printed on a label located on the battery.

B-3 Battery Temperature

Battery performance of lead-acid type batteries is greatly affected by extreme temperatures. When a lead-acid type battery is cold, its effective amp-hour capacity is reduced. When determining the battery requirements needed for the inverter system, realize that the battery capacity will be reduced if they will be installed in a climate where extremely cold temperatures are expected. In this type of environment, the batteries should be located in a heated area. At the minimum, the batteries should be installed in an insulated enclosure; which will keep the batteries warmer as they are being charged.

The battery bank should also be protected from high temperatures, which will shorten battery life. In high heat situations the battery room/enclosure should be ventilated to bring in cooler air and exhaust the hotter air. The performance of the battery bank/inverter system will substantially increase by monitoring and preventing extreme temperatures around the batteries.

B-4 Battery Bank Sizing

The size of the battery bank determines how long the inverter will power the AC loads without recharging. The larger the battery bank, the longer the run time. Size your battery bank to the systems AC load requirements and length of time required to run from the batteries. In general, the battery bank should not be discharged more than 50%. Additional DC charging devices such as solar, wind, hydro, etc., can provide longer run times by recharging the batteries in the absence of AC shorepower or a generator.

Info: For the MSH3012RV inverter/charger to perform optimally, a minimum battery bank of 200 AmpHrs is recommended for moderate loads (<1000W) and greater than 400 AmpHrs for heavy loads (≥1000W).

B-5 Battery Bank Sizing Worksheet

Complete the steps below to determine the battery bank size required to power your AC loads:

1. Determine the daily power needed for each load

a) List all AC loads required to run; and
b) List the Wattage for each load (see Table C-1 for common loads/wattage); and
c) multiply by how many hours per day (or a fraction of an hour) each load will be used; and
d) multiply by how many days per week you will use the listed loads; and
e) divide by seven = **Average Daily Watt-Hours Per Load**.

Average Daily Watt-Hours Per Load				
AC load	**Wattage**	**(x) hours per day**	**(x) days per week**	**(÷7) = total power**

2. Determine the total power needed each day for all the loads.

- Add all *Average Daily Watt-Hours Per Load* = **Total Daily Watt-Hours**.

Total Daily Watt-Hours

3. Determine the battery amp-hour capacity needed to run all the loads before recharging.

- Divide the *Total Daily Watt-Hours* by the nominal battery voltage of the inverter (i.e., 12 volts); and
- Multiply this by # of days the loads will need to run without having power to recharge the batteries (3 to 5 days of storage) = **Storage Amp-Hours**.

(inverter battery voltage)

÷ ____ =

(days of storage)

x ____ =

4. Determine how deeply you want to discharge your batteries.

- Divide the *Storage Amp-Hours* by 0.2 or 0.5 to get the **Total Amp-Hours:**
  a) 0.2 = Discharges the batteries by 20% (80% remaining), this is considered the optimal level for long battery life; or
  b) 0.5 = Discharges the batteries by 50% (50% remaining), this is considered a realistic trade-off between battery cost and battery life.

Total Amp-Hours

Additional compensation:

Low battery temperature: If the batteries are installed in a location that will be exposed to low temperatures, the available output will be less. In these instances, you will need to determine the lowest temperature the battery bank will experience and multiply the *Total Amp-Hours* by the multiplier below.

Temperature	80F/27C	70F/21C	60F/15C	50F/10C	40F/4C	30F/-1C	20F/-7C
Multiplier	1.00	1.04	1.11	1.19	1.30	1.40	1.59

Inverter efficiency: When used in a back-up power application the inverter efficiency will not be a large concern; however, if the inverter is the primary AC source for the calculated load, the *Total Amp-Hours* should be multiplied by 1.2 to factor in an average 80% inverter efficiency.

B-6 Battery Wiring Configurations

The battery bank must be wired to match the inverter's DC input voltage. In addition, the batteries can be wired to provide additional run time. The various wiring configurations are:

B-6.1 Series Wiring

Wiring batteries in series increases the battery bank's output voltage. A series connection combines each battery in a string until the total voltage matches the inverter's DC requirement. Even though there are multiple batteries, the capacity remains the same. In Figure B-1 below, two 6 VDC/200 AH batteries are combined into a single string resulting in a 12 VDC, 200 AH bank.

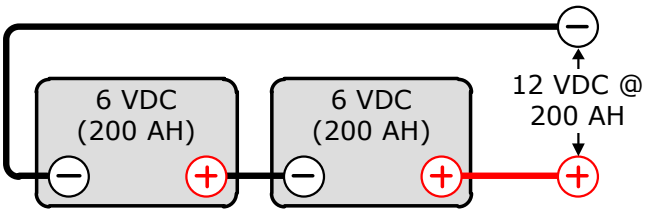

Series Battery Wiring
combines battery voltage:
200 AH @ 6 VDC
+
200 AH @ 6 VDC
=
200 AH @ 12 VDC

Figure B-1, Series Battery Wiring

B-6.2 Parallel Wiring

Wiring batteries in parallel increases the battery bank's amp-hour capacity, which allows the AC loads to operate for a longer time. A parallel connection combines the number of batteries in the string to increase overall battery capacity; however, the voltage remains the same. In Figure B-2 below, two 12 VDC/100 AH batteries are combined into a single 12 VDC, 200 AH battery bank.

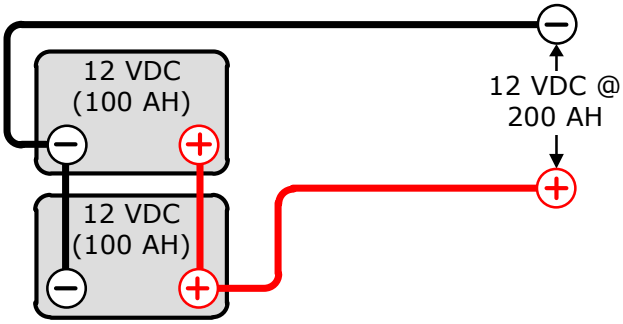

Parallel Battery Wiring
combines battery capacity:
100 AH @ 12 VDC
+
100 AH @ 12 VDC
=
200 AH @ 12 VDC

Figure B-2, Parallel Battery Wiring

B-6.3 Series-Parallel Wiring

A series/parallel configuration increases both voltage (to match the inverter's DC requirements) and amp-hour capacity (to increase run-time for operating the loads) using smaller, lower-voltage batteries. In Figure B-3 below, four 6 VDC/200 AH batteries are combined into two strings resulting in a 12 VDC, 400 AH battery bank.

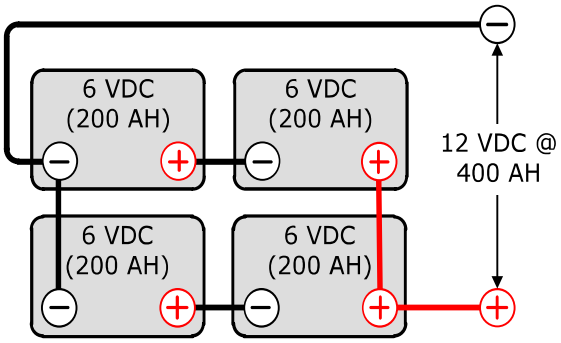

Series/ Parallel Battery Wiring
combines battery voltage and capacity:

200 AH @ 6 VDC + 200 AH @ 6 VDC	=	200 AH @ 12 VDC		
		+	=	400 AH @ 12 VDC
200 AH @ 6 VDC + 200 AH @ 6 VDC	=	200 AH @ 12 VDC		
add voltage in series		add capacity in parallel		add voltage and capacity together

Figure B-3, Series-Parallel Battery Wiring

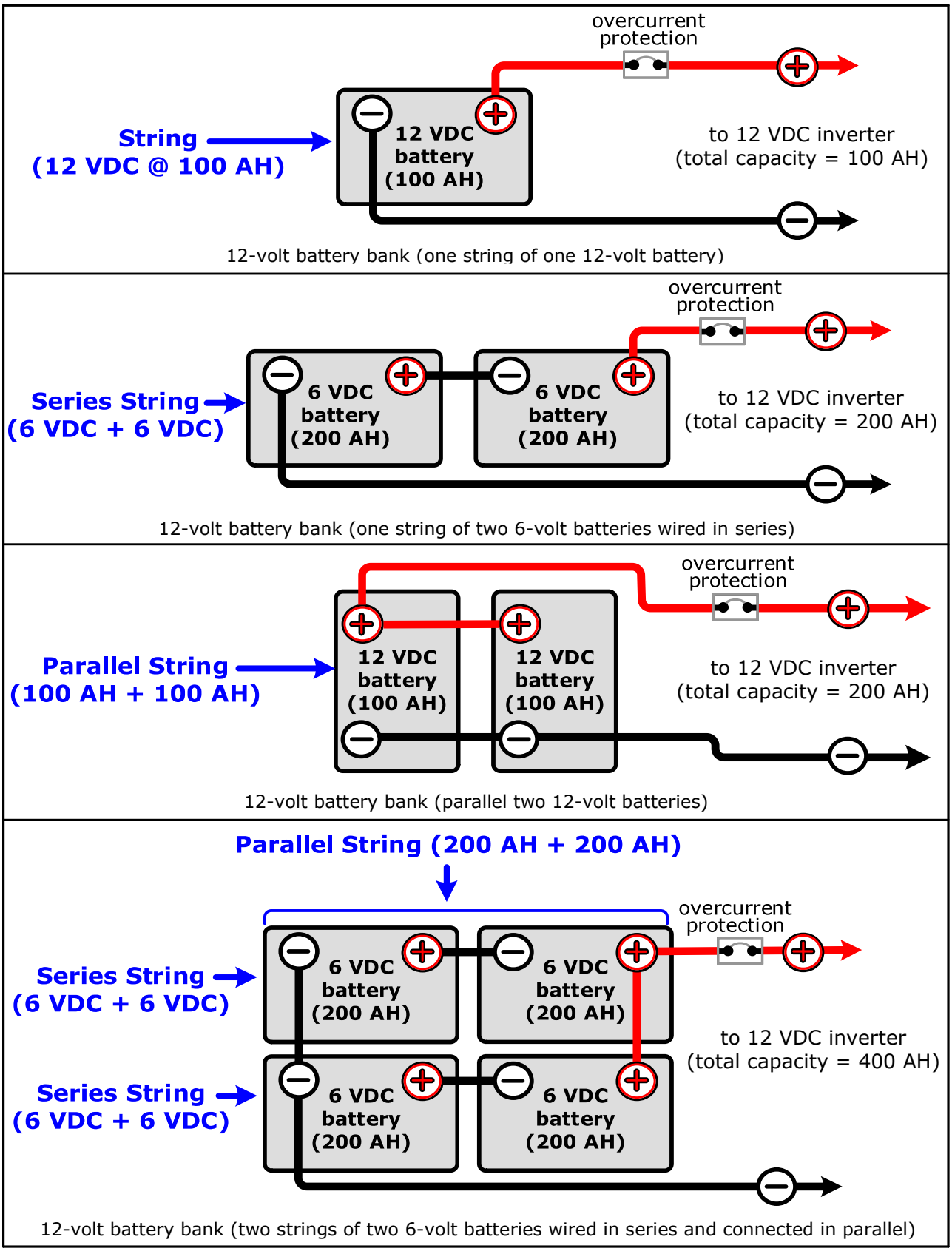

Figure B-4, Battery Bank Wiring Examples (12-volt)

Appendix C – Power Consumption and Output Waveforms

C-1 Appliance Power Consumption

The MSH3012RV inverter/charger can power a wide range of household appliances including small motors, hair dryers, clocks, and other electrical devices. As with any appliance using batteries for power, there is a certain length of time that it can run—this is called "run time." Actual run time depends on several variables including the size and the type of appliance, the type of batteries installed in your application, as well as the battery's capacity and age. Other factors such as the battery's state of charge and temperature can also affect the length of time your appliances can run.

Appliances (TVs, VCRs, stereos, computers, coffee pots, incandescent lights, and toasters) can all be successfully powered by your inverter. Larger electrical appliances, however, such as stoves, water heaters, etc., can quickly drain your batteries and are not recommended for this application.

All electrical appliances are rated by the amount of power they consume (see Table C-1). The rating is printed on the product's nameplate label, usually located on its chassis near the AC power cord. Even though it is difficult to calculate exactly how long an inverter will run a particular appliance, the best advice is trial and error. Your MSH3012RV inverter has a built-in safeguard that automatically protects your batteries from over-discharge.

Table C-1, Typical Appliance Power Consumption

Device	Load	Device	Load	Device	Load
Blender	400W	Coffee Maker	1200W	Light (Flo)	10W
Computer	300W	Color TV	150W	Microwave	1000W
Drill	500W	Hair Dryer	1000W	Light (Inc)	100W
Hot Plate	1800W	Iron	1000W	Refrigerator	500W

C-2 Inverter Output Waveforms

The inverter's output waveform is the shape of the wave that alternating current makes as its voltage rises and falls with time. Today's inverters come in three basic output waveforms: square wave, modified sine wave and pure sine wave.

- **Square Wave** – The simplest AC waveform. Some types of equipment behave strangely when powered from a square wave inverter.
- **Modified Sine Wave** – Also called a "quasi sine wave". This output looks like a one-step staircase and the waveform changes its width to continually provide the correct RMS output voltage regardless of the battery voltage. Most loads that run from a sine wave will also run from a modified sine wave. However, things such as clocks and furnace controllers may have trouble.
- **Sine Wave** – An AC waveform that looks like rolling waves on water. It rises and falls smoothly with time. The grid puts out a sine waveform. Any plug-in AC equipment will operate from a sine wave inverter.

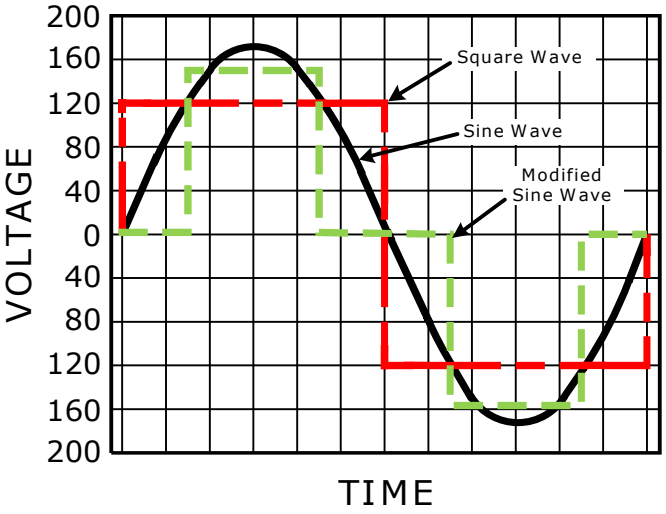

Figure C-1, AC Waveforms

Appendix D – Inverter/Charger Terminology

The following is a glossary of terms with which you may not be familiar. They appear in the various descriptions of inverter and battery charger operation.

Absorption Stage – In this second stage of three stage charging, the batteries are held at a constant voltage (the absorb voltage setting) and the battery is charged to its maximum capacity.

AC (Alternating Current) – Electrical current that varies with time (i.e., shorepower). The rate at which the voltage changes polarity is the frequency in Hertz (Hz).

Ampacity – The ampacity of a wire is its current carrying capacity with reference to the cross-sectional area of the conductors, the temperature rating of the insulation and the ambient temperature.

Automatic Transfer Relay (inside the inverter) – An automatic switch that switches between Inverter and Standby mode depending on availability of AC input power. If AC is present, the unit will be a battery charger and pass power through the inverter. When the AC goes away, the unit becomes an inverter.

Bulk Charge Stage – The first stage in three stage charging. In this stage, a constant current is fed to the batteries and as they accept the current the battery voltage will rise.

CEC (Canadian Electrical Code) – The guidelines and acceptable practices for electrical installations in Canada.

Current (Amps) – The amount of electricity flowing through a conductor.

DC (Direct Current) – Electrical current that does not vary with time (i.e., battery voltage).

Deep Cycle – A deep cycle occurs when a battery is discharged to less than 20% of its capacity (80% depth-of-discharge).

Deep Cycle Battery – A battery designed to be routinely discharged to 20% of its maximum capacity without damage. This type of battery is recommended for use with an inverter system.

Derating – As an inverter (or charger) is used above its normal temperature, it's capacity to power loads (or charge) continuously is decreased.

Digital Volt Meter (DVM):

- **True RMS** – A voltmeter that incorporates a RMS converter to read true RMS for any waveform shape.
- **Averaging Type** – A voltmeter that requires a sine wave waveform shape to provide an accurate reading.

Efficiency – Usually given as a percentage, efficiency is the ratio of the output to the input. The efficiency changes with power output levels of any inverter.

Electrolyte – Typically a mixture of water and sulfuric acid that is used in lead-acid batteries; it is commonly referred to as battery acid.

Equalization – Controlled "overcharging" of the battery causing it to bubble and mix. This helps reduce stratification.

Float Stage – During the third stage of three stage charging, the voltage and current are reduced to a level that will trickle charge or maintenance charge the battery. This assures the battery remains fully charged even while sitting.

Fuse or Disconnect – When current exceeds a preset limit the fuse or disconnect will fail before the wiring or equipment it is protecting. Disconnects are also called circuit breakers. These are usually reset and can act as a switch to turn off power to equipment for servicing.

Grid Power (The grid) – Also called utility power, this refers to the public power distribution system.

Impedance – Slows the electrical flow of Alternating Current (AC).

LED (Light Emitting Diode) – A light or indicator made up of semi-conducting material.

Line Tie – Term used when the inverter is connected to public power or the "grid" system.

Load(s) – An electrical item that draws power (i.e., lights, radio, refrigerator, etc.,) to work.

Locked Rotor Amps – The current drawn by an electric motor with the shaft or rotor stopped and locked in position. This can be used to determine if an inverter has enough surge current to start a motor. If the inverter is capable of producing more amperage than the locked rotor amps rating of a motor, it will most likely start the motor easily.

NEC (National Electric Code) – The guidelines and acceptable practices for electrical installations in the USA.

Off Grid – Not connected to public power in any way.

Pass Through Current – The amount of current the inverter can safely pass directly from the AC input to the AC output.

Photovoltaic (PV) – Solar powered.

Resistance (Ohms) – Slows the electrical flow of Direct Current (DC).

RMS (Root Mean Square) – A measure of AC voltage that provides the equivalent heating value across a resistor as would a DC source of the same voltage.

RVIA – The Recreation Vehicle Industry Association is the national trade association representing recreation vehicle (RV) manufacturers and their component parts suppliers. RVIA maintains as inspection program to monitor compliance of the plumbing, heating, fire and life safety, and the electrical systems of the RVs manufactured by its members.

RV-C – A communications protocol based on the Controller Area Network (CAN) bus. The protocol is used in recreation vehicles to allow house and chassis components to communicate. RV-C is used for control, coordination, and diagnostics in a multi-vendor environment.

Sellback, or **Selling Back To The Grid or Utility-Interactive** – Some inverters have the capability to take energy stored in batteries, or from solar panels, and put it back into the utility grid. The local public utility company can compensate you for using this energy.

Shorepower – The process of providing shore side electrical power to a vehicle while its engine is turned off. The source for shorepower may be grid power from an electric utility company, or from an external remote generator.

Stacking:

- **Series** – Two inverters operating together to produce twice the power and voltage of a single inverter. Required when operating 240 VAC loads and separate 120 VAC loads from either inverter.
- **Parallel** – Two inverters operating together to provide twice the continuous capacity on a single output circuit. Required when a single load is too large for one inverter.

Stratification – Over time, a battery's electrolyte (liquid) tends to separate. The electrolyte at the top of the battery becomes watery while at the bottom it becomes more acidic. This effect is corrosive to the plates.

Sulfating – As a battery discharges, its plates become covered with lead sulfate. During recharging, the lead sulfate leaves the plates and recombines with the electrolyte. If the lead sulfate remains on the plates for an extended period of time (over two months), it hardens, and recharging will not remove it. This reduces the effective plate area and the battery's capacity.

Temperature Compensation – Peak available battery voltage is temperature dependent. As ambient temperatures fall, the proper voltage for each charge stage needs to be increased. A Battery Temperature Sensor (BTS) automatically re-scales charge-voltage settings to compensate for ambient temperatures.

Voltage – The pressure that causes electrical flow in a circuit.

Watts – Measure of power output or utilization. Watts = Volts x Amps.

MAGNUM ENERGY

DMX POWER

64-0089 F Owner’s Manual, MSH3012RV