CSW2012-X

Pure Sine Wave Inverter

Owner's Manual

Disclaimer of Liability

Since the use of this manual and the conditions or methods of installation, operation, use and maintenance of the CSW2012-X inverter is beyond the control of DMX Power, this company does not assume responsibility and expressly disclaims liability for loss, damage or expense, whether direct, indirect, consequential or incidental, arising out of or in any way connected with such installation, operation, use, or maintenance.

Note as well that while every precaution has been taken to ensure the accuracy of the contents of this manual, the specifications and product functionality may change without notice. DMX Power assumes no responsibility for errors or omissions.

Restrictions on Use

The CSW2012-X inverter may only be used in life support devices and systems with the express written approval of DMX Power. Failure of this inverter can reasonably be expected to cause failure of that life support device or system, or to affect the safety or effectiveness of that device or system. If the CSW2012-X inverter fails, it is reasonable to assume the health of the user or other persons may be endangered.

Copyright Notice

Copyright © 2026 by DMX Power LLC. All rights reserved. Permission to copy, distribute, and/or modify this document is prohibited without express written permission from DMX Power.

Document Information

Description – CSW2012-X Owner's Manual
Part Number and Revision – 64-0074 Rev D
Date Published – February 2026

The entire manual is available for download—with many of the diagrams available in color—from our website at: www.dmx-power.com

Contact Information

DMX Power
Phone: 800-553-6418 or 651-653-7000
Technical Questions: support@dmx-power.com
Warranty or RMA: warranty@dmx-power.com
Web: www.dmx-power.com

Statement of Appreciation

Thank you from all of us at DMX Power for purchasing this CSW2012-X inverter. At DMX Power, we are committed to providing you with quality products and services, and hope that your experience with us is pleasant and professional.

Record the inverter model and serial number in case you need to provide this information in the future.	
Model:	**Serial Number**
CSW2012-X	

IMPORTANT PRODUCT SAFETY INSTRUCTIONS

This manual contains safety instructions that must be followed during the installation and operation of this product. Read all instructions and safety information on the inverter and in this manual before installing or using.

Safety Symbols

To reduce the risk of electrical shock, fire, or other safety hazard, the following safety symbols have been placed throughout this manual to indicate dangerous situations and important safety instructions.

WARNING: Indicates that failure to take a specified action could result in physical harm to the user.

CAUTION: Indicates that failure to take a specified action could result in damage to the equipment.

Info: Indicates information that emphasizes or supplements important points of the main text.

Product Safety Warnings

WARNINGS: Failure to follow the instructions below and in this manual can result in death or serious injury.

- All electrical work must be performed in accordance with local, state and federal electric codes.
- This product is designed for indoor/compartment installation. Do not expose to rain, snow, moisture, or liquids of any type.
- Use insulated tools to reduce the chance of electrical shock or accidental short circuits. Be sure to remove all jewelry such as rings, watches, bracelets, etc., when installing or performing maintenance on the inverter.
- Always disconnect the batteries or energy source prior to installing or performing maintenance on the inverter. Live power may be present at more than one point since an inverter utilizes both batteries and AC.
- Do not cover or obstruct any air vent openings and/or install in a zero-clearance compartment - always operate unit in an open area.
- When working with electrical equipment or lead acid batteries, have someone nearby in case of an emergency.
- Study and follow all the battery manufacturer's specific precautions when installing, using, and servicing the battery connected to the inverter.
- While working with batteries, wear eye protection and gloves, and avoid touching your eyes. Keep fresh water and soap on hand in the event battery acid comes in contact with eyes. If this occurs, cleanse right away with soap and water for a minimum of 15 minutes and seek medical attention.
- Batteries produce explosive gases, DO NOT smoke or have an open spark or fire near the system.
- Avoid dropping any metal tool or object on the battery. Doing so could create a spark or short circuit which goes through the battery or another electrical tool and may cause an explosion.
- Shock Hazard! Keep away from children!
- These inverters provide household AC, treat the AC output sockets the same as regular wall AC sockets at home.
- Explosion hazard! DO NOT use this inverter in the vicinity of flammable fumes or gases (such as propane tanks or large engines).
- These inverters contain no user-serviceable parts. See the Warranty section for how to handle service issues.

Table of Contents

1.0 Introduction 1
1.1 Features 1
1.2 How this Inverter Works 4
1.3 Advantages of a Pure Sine Wave Inverter 4
2.0 Installation 5
2.1 Pre-Installation 5
2.1.1 Installation Guidelines 5
2.1.2 Unpacking and Inspection 5
2.1.3 Tools Required 5
2.2 Locating and Mounting the Inverter 7
2.3 Wiring the Inverter – General Requirements 9
2.3.1 Wiring Requirements 9
2.3.2 Torque Requirements 9
2.4 DC Wiring 10
2.4.1 DC Wire Sizing 11
2.4.2 DC Overcurrent Protection 12
2.4.3 DC Grounding 12
2.4.4 DC Cable Connections 12
2.4.5 Wiring the Battery Bank 13
2.4.6 Appliances and Run Time 13
2.4.7 Wiring the Inverter to the Battery Bank 14
2.5 AC Wiring 16
2.5.1 Pre-AC Wiring Requirements 16
2.5.2 AC Wire Size and Overcurrent Protection 16
2.5.3 AC Neutral to Safety Ground Bonding 17
2.5.4 AC Terminal Block Connections 18
2.5.5 AC Conductor Wiring Steps 18
2.5.6 Removing the Display Panel 22
2.6 Testing the Inverter 23
2.6.1 Inverter Functional Test 23
3.0 Operation 24
3.1 Inverter Mode 24
3.2 By-Pass Mode 24
3.3 Display Panel Operation 25
3.4 Understanding Loads 28
4.0 Troubleshooting 29
5.0 Specifications 35
Appendix A - Battery Information 36
Battery Bank Sizing 36
Battery Types 36
Battery Configuration 36
Series Wiring 36
Parallel Wiring 37
Series-Parallel Wiring 37
Appendix B - Preventive/Periodic Maintenance 38
Recommended Inverter and Battery Care 38
RV/Marine Off-Season Storage 38
Appendix C - Regulatory and FCC Information 39
Appendix D - About the PS5 and PS6 Settings 40

List of Figures

Figure 1-1, Front Panel Features 1
Figure 1-2, Front Panel Features (Cover Removed) 2
Figure 1-3, Back Panel Features 3
Figure 1-4, AC Waveforms 4
Figure 2-1, Basic System Diagram 6
Figure 2-2, Approved Mounting Positions 8
Figure 2-3, CSW2012-X Dimensions 8
Figure 2-4, DC Cable to Battery Terminals 15
Figure 2-5, DC Cable to Inverter's DC Terminals 15
Figure 2-6, AC Wiring (20A By-Pass and GFCI output)) 20
Figure 2-7, AC Wiring (30A By-Pass) 21
Figure 2-8, Remote Cable 22
Figure 3-1, Display Panel 25
Figure 3-2, Inverter Setting Flow Chart 26
Figure A-1, Series Battery Wiring 36
Figure A-2, Parallel Battery Wiring 37
Figure A-3, Series-Parallel Battery Wiring 37

Tables

Table 2-1, Torque Requirements 9
Table 2-2, DC Wire/Overcurrent Device for Rated Use 11
Table 2-3, Appliance Power Consumption and Run Time 13
Table 3-1, Display Functions/Statuses 25
Table 3-2, Inverter Settings 27
Table 4-1, Inverter Error Codes 29
Table 4-2, Troubleshooting 30
Table 5-1, CSW2012-X Specifications 35

1.0 Introduction

Congratulations on your purchase of the CSW2012-X inverter. The CSW2012-X is a "pure" sine wave inverter with an internal transfer switch from DMX Power. This unit is designed to be powerful, yet simple to operate, and will provide you with reliable AC power for trouble-free use. Please read this chapter to familiarize yourself with the features and benefits of your CSW2012-X inverter.

1.1 Features

The front panel of the CSW2012-X inverter is equipped with the following features (see Figure 1-1):

1. **AC Wiring Access Cover** – when this cover is removed, it provides access to the AC wiring terminals used to hardwire all inverter AC input and output wiring (see Figure 1-2). Remove four screws to remove the access cover.
2. **GFCI** – a 20-amp, Ground Fault Circuit Interrupter (GFCI) protected, AC outlet. This GFCI outlet quickly stops the flow of electricity in the event a ground fault occurs on the device that is plugged into the inverter.
3. **USB Port** – allows USB-enabled devices to be powered and charged (provides 5 VDC/750 mA).
4. **Serial Number** – the unique identification number assigned to each unit (with a model-specific prefix). ***Note:*** *Enter your inverter's serial number in the table at the bottom of page i. It is to easier to record this information now, instead of trying to gather it after the unit has been installed.*
5. **Display Panel** – a removable/remote display that shows the inverter's measured battery voltage, total AC output power, and any error or warning codes. This display has LEDs that provide the inverter's status, and also includes the SELECT and POWER button switches used to set up and turn the inverter on and off (See Section 3.3).
6. **AC Output Circuit Breaker** – this supplementary 20-amp circuit breaker protects the unit's GFCI outlet and is also connected in circuit with the AC 2 output (L2 and N2 outputs). The circuit breaker pops out when it opens—press in to reset.

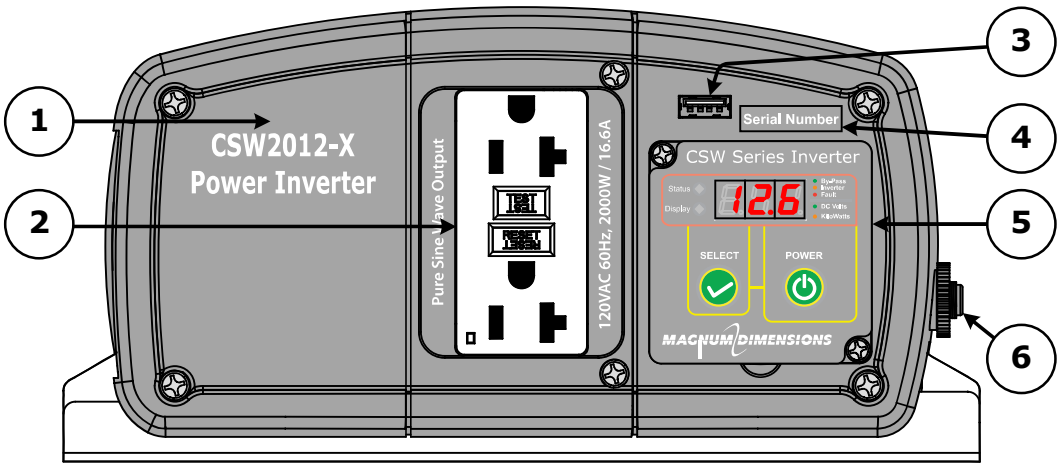

Figure 1-1, Front Panel Features

1.0 Introduction

The following front panel features are available on the CSW2012-X inverter when the access cover is removed (See Figure 1-2):

Info: To access and view the AC terminal block and ground terminal, remove the four Phillips screws holding the AC wiring access cover.

7. **AC Entry/Exit Openings** – two 1/2" knockouts are provided to accommodate the inverter's AC input and output wiring.
8. **AC Ground Connection** – used to connect all AC input and output grounds. To attach multiple ground wires (i.e., ground wires from the AC input and output circuits), use a pressure or mechanical connector (i.e., ring terminal).
9. **AC Input Terminal** – a two-pole terminal block used to connect the inverter's AC input wiring. This terminal block allows a service/distribution panel (main panel) to be wired to the inverter's input.
10. **AC Output Terminal** – this four-pole terminal block is used to connect the inverter's AC output wiring. This terminal block allows a dedicated panel (sub-panel) to be connected between the inverter's output wiring and the AC loads.

The AC 1 output terminals (L1/N1) allow a pass-thru (By-Pass mode) current of 30 amps. The AC 2 output terminals (L2/N2) are protected by the inverter's 20-amp circuit breaker (Figure 1-1, Item 6) which limits the pass-thru current of 20 amps.

CAUTION: The inverter's internal AC transfer relay is rated for 30 amps. The pass-thru current from the input terminal to the AC 1 (L1/N1) output terminals must be no greater than 30 amps or damage to the internal relay may occur.

Info: The AC input and output terminals can accept one #14 to #10 AWG (2.1 to 5.3 mm^2) CU stranded wire. They use slotted head screws and have a recommended maximum tightening torque of 5 to 8 lbf-in (0.6 to 0.9 N-m).

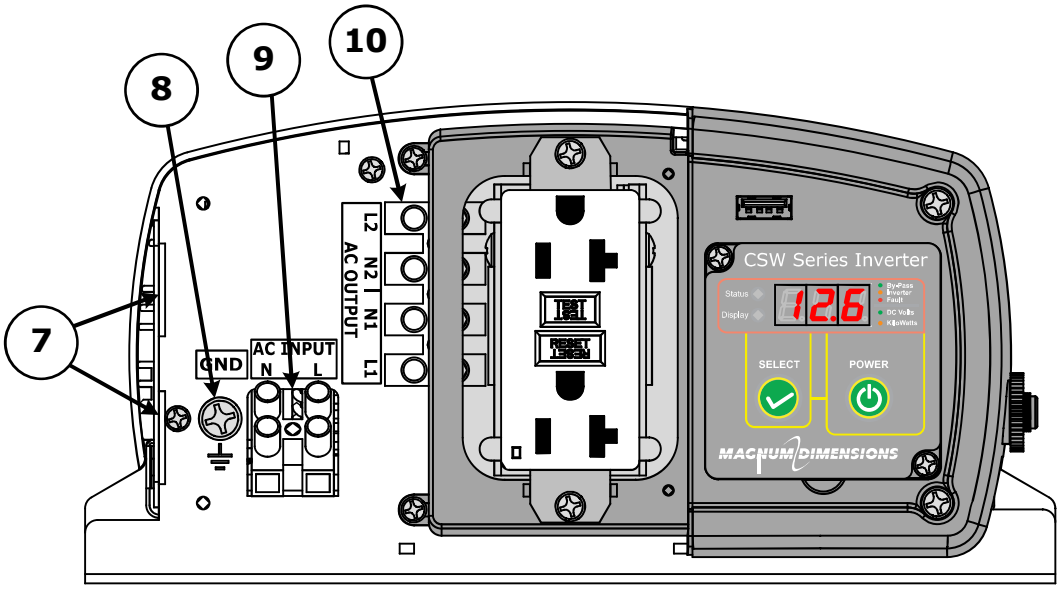

Figure 1-2, Front Panel Features (Cover Removed)

The back panel of the CSW2012-X inverter is equipped with the following features (See Figure 1-3):

11. **Model Number** – the model number of the inverter and other information.
12. **Cooling Fan(s)** – intake cooling fans that automatically turn on when the inverter's internal temperature rises above 122°F (50°C). The fan turns off when the inverter's internal temperature falls below 122°F (50°C).
13. **Mounting Flanges (front and rear)** – used to mount and secure the inverter to a shelf/wall.
14. **DC Positive Terminal (red)** – the inverter's connection to the positive terminal on the 12 VDC battery bank.
15. **DC Negative Terminal (black)** – the inverter's connection to the negative terminal on the 12 VDC battery bank.
16. **DC Ground Connection** – the connection that is used to tie the exposed chassis of the inverter to the DC grounding system. The DC grounding system could be the vehicle's chassis, the DC grounding bus, or the engine's negative bus. To attach ground wires, use a pressure or mechanical connector (i.e., ring terminal) with a 1/4" opening.

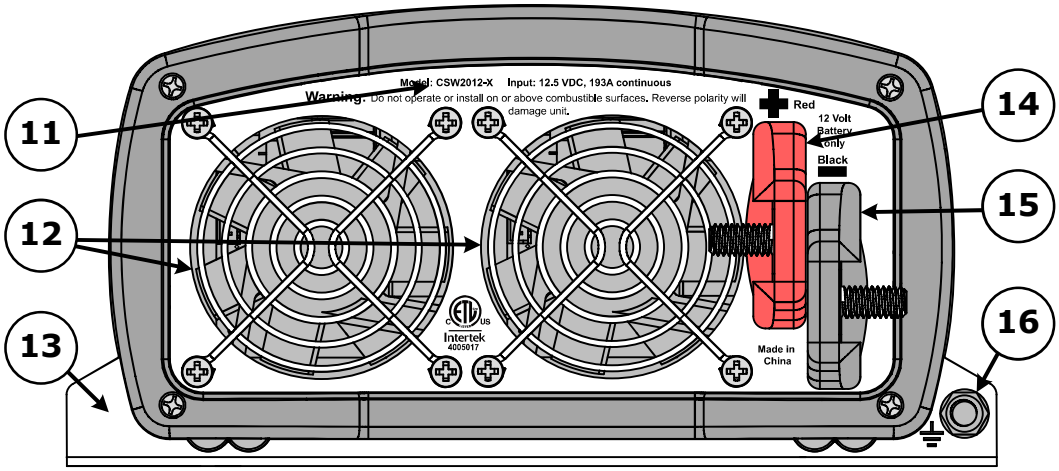

Figure 1-3, Back Panel Features

1.2 How this Inverter Works

There are two modes of operation associated with the CSW2012-X inverter:

• Inverter Mode:

When the inverter is properly connected to batteries and turned on, the direct current (DC) from the batteries is transformed into a pure sine wave alternating current (AC). This AC is similar to the voltage provided by your utility and is used to power any electrical appliances (i.e., AC loads) connected to the inverter's output.

• By-Pass (pass-through) Mode:

When an external source of AC power (i.e., utility power or generator) is connected and qualified on the inverter's AC input, it operates in By-pass mode. In By-pass mode, the unit automatically closes an internal AC transfer relay that passes the incoming AC power directly to the inverter's output to continue powering the connected electrical appliances.

1.3 Advantages of a Pure Sine Wave Inverter

Today's inverters come in three basic output waveforms: square wave, modified sine wave (which is actually a modified square wave) and pure sine wave (see Figure 1-4).

Modified sine wave inverters approximate a pure sine wave form and will run most appliances and electronics without any problems. These inverters are less expensive, and therefore, offer a viable alternative to more expensive pure sine inverters.

The output of the CSW2012-X inverter—which is pure sine wave—is equal to, or in many cases, better than the utility power used in your home. Virtually any electronic device will operate from a pure sine wave inverter. Motors run cooler, microwaves usually cook faster, and clocks keep better time just to name a few examples. Without compromising quality or performance, the CSW2012-X provides you with all the advantages of a pure sine wave inverter at a much lower cost than many on the market.

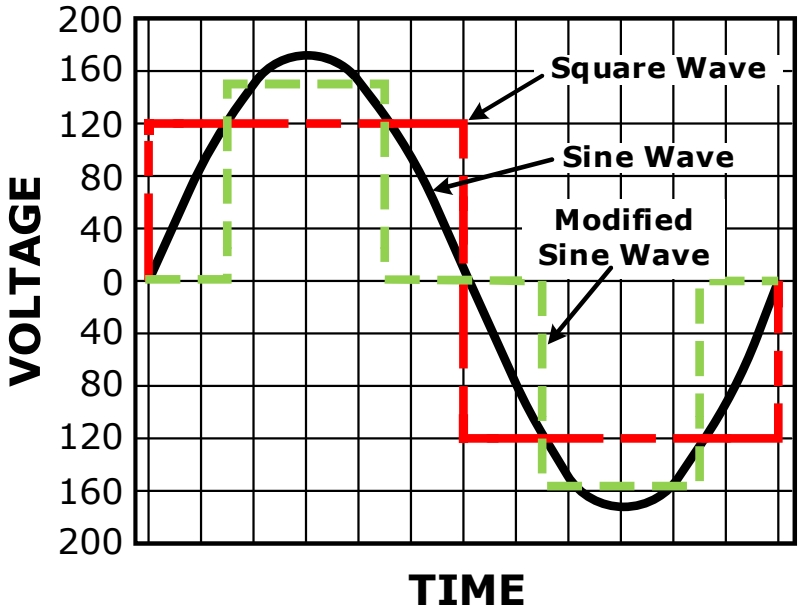

Figure 1-4, AC Waveforms

2.0 Installation

Review this section and all safety instructions before proceeding with the installation of your inverter.

WARNING: Installations should be performed by qualified personnel, such as a licensed or certified electrician. The installer determines which safety codes apply and ensures all applicable installation requirements are followed. Applicable installation codes vary depending on the specific location and application.

WARNING: Before installing, review the "Important Product Safety Information" on page ii and adhere to all cautionary markings located on the inverter and on the batteries.

2.1 Pre-Installation

Before proceeding, read the entire Installation section to determine how best to install your CSW2012-X inverter. The more thorough you plan in the beginning, the better your inverter needs will be met. There is a simplified system diagram shown in Figure 2-1. This diagram should be reviewed to assist you in planning and designing your installation. This drawing is not intended to override or to restrict any national or local electrical codes, and should not be the determining factor as to whether the installation is compliant, that is the responsibility of the electrician and the onsite inspector.

2.1.1 Installation Guidelines

- Before connecting any wires, determine the cable routes throughout the vehicle or boat, both to and from the inverter.
- Always check for existing electrical, plumbing, or other areas of potential damage BEFORE drilling or cutting into walls.
- Make sure all wires have a smooth bend radius and do not become kinked.
- If installing this inverter in a boat, RV or truck, ensure the conductors passing through walls, bulkheads, or other structural members are protected. This minimizes insulation damage (such as chafing), which can be caused by vibration or constant rubbing.

2.1.2 Unpacking and Inspection

Carefully remove the inverter from its shipping container and inspect all contents. Verify the following items are included:

- CSW2012-X inverter
- CSW2012-X Owner's Manual

If items appear to be missing or damaged, contact your authorized DMX Power dealer or DMX Power directly.

*** ***Save your proof-of-purchase as a record of your ownership; it is needed if the unit should require in-warranty service.*** ***

2.1.3 Tools Required

Installing the inverter is simple and requires the following:

- Adjustable wrench (10-13 mm)
- #10 Mounting screws (x4)
- Phillips screwdriver
- Level
- Pencil
- Drill
- Drill bits

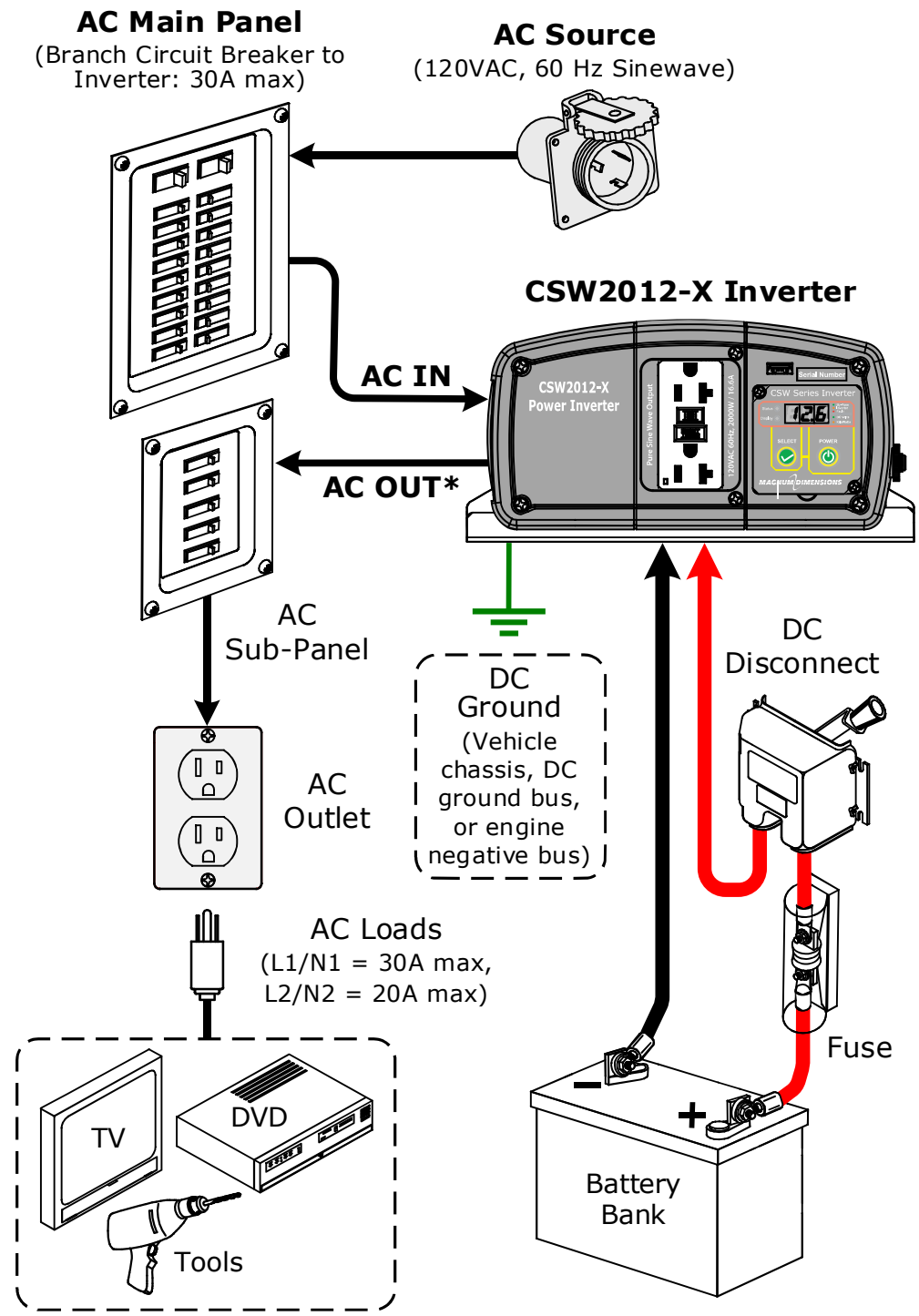

* Maximum pass-thru current from AC output terminals:
L1/N1 output terminals = 30 amps,
L2/N2 output terminals = 20 amps (in series with GFCI outlet).

Figure 2-1, Basic System Diagram

2.2 Locating and Mounting the Inverter

WARNINGS:

- Do not mount the inverter near any flammable or combustible fluid or components.
- Provide adequate clearance/ventilation to the inverter. Do not cover or obstruct any air vent openings and/or install in a zero-clearance compartment.

The CSW2012-X inverter should only be installed and mounted in a location that meets the following requirements:

Clean and dry – The inverter should not be installed in an area that allows dust, fumes, insects, or rodents to enter or block the inverter's ventilation openings. This area also must be free from any risk of condensation, water, or any other liquid that can enter or fall on the inverter. Inverter failure under these conditions is not covered under warranty.

Cool – The inverter should be protected from direct exposure to the sun or to any equipment that produces extreme heat. The ambient temperature should be between 32°F (0°C) and 104°F (40°C); note that the inverter's output specifications are rated at 77°F (25°C), so the cooler the better.

Ventilated – In order for the inverter to provide full output power and avoid over-temperature fault conditions, do not cover or block the inverter's ventilation openings, or install this inverter in an area with limited airflow. Allow a minimum airspace clearance of 3" (7.6 cm) around the unit to provide optimum ventilation.

Safe – Keep any flammable/combustible material (e.g., paper, cloth, plastic, etc.,) that may be ignited by heat, sparks, or flames at a minimum distance of 2 feet (60 cm) away from the inverter. Do not install in any area that contains extremely flammable liquids like gasoline or propane, or in locations that require ignition-protected devices.

Close to the battery bank – As with any inverter, it should be located as close to the batteries as possible. Long DC wires tend to lose efficiency and reduce the overall performance of an inverter. However, the unit should not be installed in the same compartment as the batteries or mounted where it will be exposed to gases produced by the batteries. These gases are corrosive and will damage the inverter; also, if these gases are not ventilated and if allowed to collect, they could ignite and cause an explosion.

Accessible – Do not block access to the front or back of the inverter. Allow room to view any indicators or the digital display and to access the AC and DC wiring connections—these wiring connections will need to be checked and tightened periodically.

Orientating the inverter - When mounted indoors, the CSW2012-X inverter can be mounted on/underneath a horizontal surface (shelf or table) or on a vertical surface (wall or bulkhead) with the DC terminals facing left, right, or up; do not mount with the DC terminals facing downward (see Figure 2-2).

After determining your mounting position, use the base of the inverter's chassis as a template to mark your mounting screw locations (or, refer to the dimensions in Figure 2-3). Remove the inverter and drill pilot holes into the mounting surface. Secure the inverter to the surface using the appropriate corrosion-resistant hardware. If this unit is used in a mobile application, you may want to place flexible washers or bushings between the mounting surface and the inverter's mounting flanges to reduce vibration.

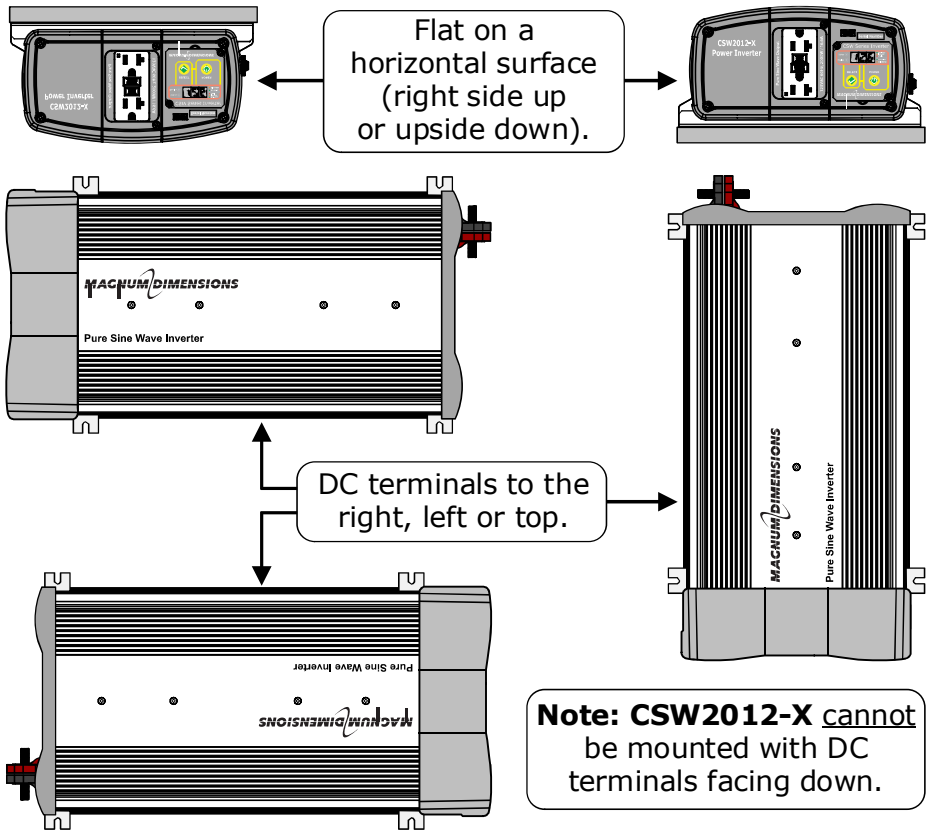

Figure 2-2, Approved Mounting Positions

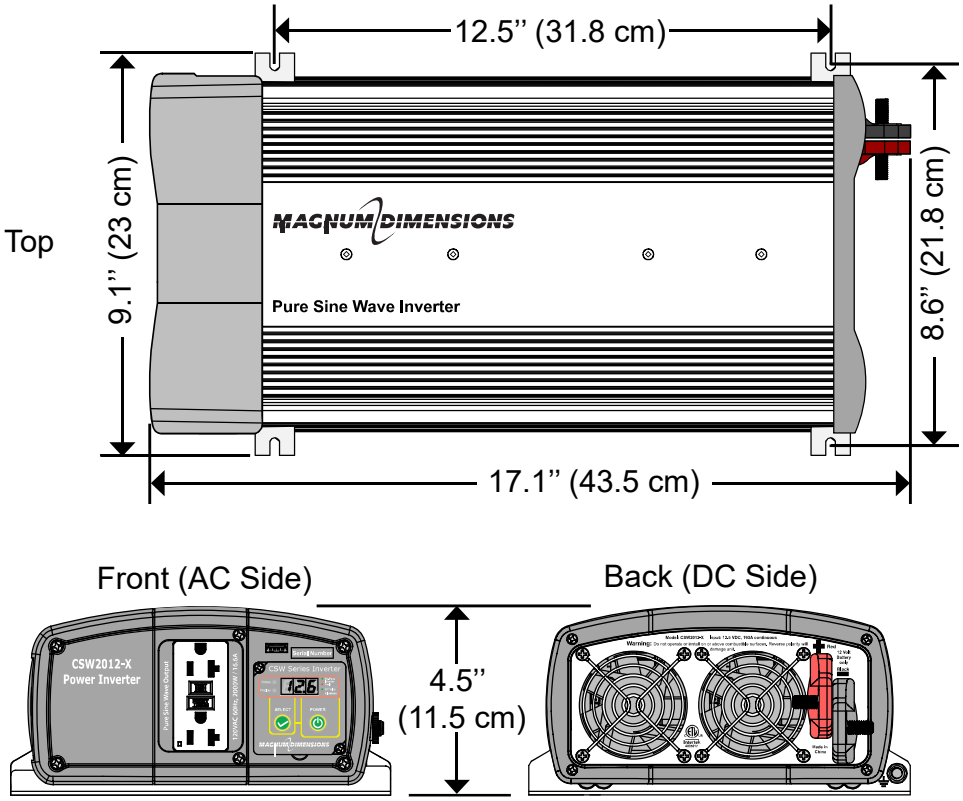

Figure 2-3, CSW2012-X Dimensions

2.3 Wiring the Inverter – General Requirements

This section describes the requirements and recommendations for wiring the CSW2012-X inverter. Before wiring the inverter, carefully read all instructions.

The NEC (National Electric Code, ANSI/NFPA 70) for the United States and the CEC (Canadian Electrical Code) for Canada provide the standards for safely wiring residential and commercial installations. The NEC/CEC lists the standards for wire sizes, overcurrent protection, and installation methods and requirements.

Inverter/charger systems involve power from multiple sources (inverter, generator, utility, batteries, solar arrays, etc.) which can make the wiring more hazardous and challenging.

WARNING: Ensure all sources of DC power (i.e., batteries, solar, wind, or hydro) and AC power (utility power or AC generator) are de-energized (i.e., breakers opened, fuses removed) before proceeding—to prevent accidental shock.

WARNING: Wiring should meet all local codes/standards and be performed by qualified personnel (i.e., licensed electrician).

2.3.1 Wiring Requirements

- All conductors that are at risk for physical damage must be protected by tape or placed in a raceway.
- Always check for existing electrical, plumbing, or other areas of potential damage prior to making cuts in structural surfaces or walls.
- Use only copper wires with a minimum temperature rating of 75° C (194° F).
- Do not mix AC and DC wiring in the same conduit or panel unless specifically approved/designed for both AC and DC wiring. Where DC wiring must cross AC or vice-versa, try to make the wires at the crossing point perpendicular (90 degrees) to one another.
- Both AC and DC overcurrent protection must be provided as part of the installation.
- The inverter requires a reliable negative and ground return path directly to the battery.

2.3.2 Torque Requirements

All wiring to the AC and DC terminals should be checked periodically (once a month) for proper tightness. For the torque requirements, refer to Table 2-1. If you don't have a torque wrench, ensure all connections are tight.

Table 2-1, Torque Requirements

Terminal	Size	Torque Requirements	Tool Size Needed
AC Terminals (AC input/output)	M3.5 × 7 screws	5 - 8 lbf-in (.6 to .9 N-m)	flat-head screwdriver (2.9 to 3.5 mm blade)
DC Terminals	M8 x 1.25 Hex nuts	16 to 21 lbf-ft (21.7 to 28.5 N-m)	13 mm wrench
DC Ground	M6 x 1.0 Hex nut	79 to 96 lbf-in (8.9 to 10.9 N-m)	10 mm wrench

2.4 DC Wiring

This section describes the inverter's required DC wire sizes, the recommended disconnect/overcurrent protection, and how to make the DC connections to the inverter and the battery bank.

WARNING: Even though DC voltage can be regarded as "low voltage", significant hazards may be present, particularly from short circuits of the battery system.

CAUTION: The inverter is NOT reverse polarity protected—which means if the negative and positive battery voltage is connected to the inverter backwards, the inverter will likely be damaged. Use a voltmeter to verify the correct polarity BEFORE connecting the DC wires.

CAUTION: DO NOT connect the battery cables to the inverter until all wiring is complete and the correct DC voltage and polarity have been verified.

Refer to Figure 2-4 when connecting the DC wires to the battery, and to Figure 2-5 when connecting to the inverter. Also, consider the following requirements to ensure maximum performance:

- The DC positive and negative cables connected to the inverter from the battery bank should be tied together with wire ties/straps or electrical tape approximately every 6 inches (15.3 cm). This helps improve the surge capability and reduces the effects of inductance, which improves the inverter waveform and reduces the wear of the inverter's filter capacitors. Keeping the battery cables close together also reduces the chance of radio frequency interference.
- Be aware that over-tightening or misthreading the nuts on the DC terminals can cause the bolts to strip and snap/break off.
- Make sure cables have a smooth bend radius and do not become kinked. Follow existing wire runs where possible.
- Crimped and sealed copper ring terminal lugs with at least a 6 mm (1/4") bolt hole to connect the DC wires to the inverter's DC terminals.
- The battery bank voltage MUST be between 10.5-15.5 for the inverter to operate. If the voltage exceeds 16.0V, the inverter may be damaged.
- To ensure the maximum performance from the inverter, all connections from the battery bank to the inverter should be minimized. The exceptions are the DC fuse and disconnect, or the DC circuit breaker—required at the battery to protect the DC wiring—in the positive line. Any other additional connection will contribute to additional voltage drops, and these extra connection points may loosen during use.
- A brief spark or arc may occur when connecting the battery cables to the inverter DC terminals; this is normal and due to the inverter's internal capacitors being charged.
- Before routing the wiring, color code the DC cables/wires with colored tape or heat shrink tubing: RED for positive (+); WHITE for negative (–); and GREEN (or bare copper) for DC ground, to avoid polarity problems.
- When installed in a truck/RV, a cable should be connected directly from the inverter's negative terminal to the battery negative connection; this ensures the inverter has a reliable return path directly to the battery. Do not use the vehicle chassis in place of the battery negative connection to the inverter.
- Where DC wiring must cross AC or vice-versa, try to make the wires at the crossing point perpendicular (90 degrees) to one another.

2.4.1 DC Wire Sizing

It is important to use the correct sized DC wire to achieve maximum efficiency from the system and to reduce fire hazards associated with overheating. Always keep your wire runs as short as practical to prevent low voltage shutdowns and to keep the DC breaker from nuisance tripping (or open fuses) because of increased current draw. See Table 2-2 to select the minimum DC wire size (and corresponding overcurrent device) required based on your inverter model. The cable sizes listed in this table are required in order to reduce stress on the inverter, minimize voltage drops, increase system efficiency, and ensure the inverter's ability to surge heavy loads.

If the distance from the inverter to the battery is >5 feet (1.5 m), the DC wire will need to be increased. Longer cable distances affect the performance of the inverter. See the lower part of Table 2-2 to determine the minimum DC wire size needed for various distances greater than 5 feet—based on your inverter model.

DC Wire Size Exception: In an OEM RV application, smaller DC wire (with appropriate overcurrent protection) may be used if the inverter will only be connected to a dedicated load, and the inverter and dedicated load have been thoroughly tested and sold together by the OEM as a complete system.

Table 2-2, DC Wire/Overcurrent Device for Rated Use

		CSW2012-X
Full Load Current		190 amps
Maximum Continuous Current[1]		229 amps
Minimum DC Ground Wire Size[2]		#8 AWG (8.36 mm²)
Minimum DC Wire Size [90°C rating in free air]		#2/0 AWG (67.4 mm²) [300 amps]
Maximum DC Fuse Size		300 amps with time delay
		▼
Increased size for longer distance	5 to 10 feet =	#4/0 AWG (107 mm²)
	10 to 15 feet =	Not recommended

Note 1 *- Maximum Continuous Current is based on the inverter's continuous power rating at the lowest input voltage with an inefficiency factor.*

Note 2 *- The grounding conductor for the DC system shall meet the sizing requirements specified in the NEC for the application, but must be no smaller than 8 AWG copper. In some applications (i.e., Marine installations), the DC grounding conductor is required to be no less than one size smaller than the wire size of the DC positive/negative cables.*

2.4.2 DC Overcurrent Protection

For safety reasons and to comply with electrical code regulations, DC overcurrent protection must be provided as part of the installation. The DC overcurrent protection device must be installed in the positive DC cable line, it can be a fuse (with a disconnect switch) or a circuit breaker and must be DC-rated. It must be correctly sized according to the size of DC cables being used, which means it is required to open before the cable reaches its maximum current carrying capability, thereby preventing a fire. The NEC requires both overcurrent protection and a disconnect switch.

Because batteries can deliver thousands of amps in an instant during a short, a DC-rated fuse (or circuit breaker) that has an AIC (Amps Interrupting Current) rating that can withstand the short-circuit current without explosion or damage is required to be installed. If a fuse is used as an overcurrent device, a Class-T type or equivalent is highly recommended when used with inverters. A Class-T fuse is rated for DC operation, can handle very high short-circuit currents (up to 100,000 AIC), and has a time delay that allows for momentary current surges from the inverter without opening the fuse. In some installations, if the combined short-circuit current of all the batteries in the bank is determined to be 2,700 amps or less, then an ANL type of fuse may be used—if in doubt, use a Class-T fuse. See Table 2-2 for the fuse size (coordinated with the DC wire size) recommended for the CSW2012-X inverter.

2.4.3 DC Grounding

The inverter should always be connected to a permanent, grounded wiring system. The idea is to connect the metallic chassis of the various enclosures together to have them at the same voltage potential, to reduce the possibility for electric shock. For most installations, the inverter chassis and the negative battery conductor are connected to the system's ground bond via a safety grounding conductor (bare wire or green insulated wire) at only one point in the system. The grounding conductor for the DC system shall meet the sizing requirements specified in the NEC for the application, but must be no smaller than 8 AWG copper. *For instance: An inverter used in a marine application under ABYC guidelines requires the size of the DC grounding conductor to be of an ampacity equal to or one size less than that of the DC positive conductor.* See Table 2-2 for the minimum ground wire size recommended for your inverter.

Info: If the inverter is installed in a vehicle, connect the battery negative cable directly to the inverter's negative terminal. DO NOT connect the negative battery cable meant for the inverter to the vehicle's frame/safety ground.

2.4.4 DC Cable Connections

Do not put anything between the battery cable ring lug and the battery post (see Figure 2-4), or the flat metal part of the inverter's DC terminal (see Figure 2-5). When connecting the battery cable, it should be placed directly against the battery post or inverter terminal. Incorrectly installed hardware causes a high resistance connection which could lead to poor inverter performance, and may melt the cable and terminal connections. See Table 2-1 for the torque requirements.

Info: The DC terminal and Hex nuts on the CSW2012-X are made of stainless steel, which has a high likelihood of galling or thread seizing while being tightened—causing the bolts to strip or to snap/break off. To reduce this risk, use an anti-seize lubricant, tighten the fasteners slowly (at low rpms) without interruption, and apply only light pressure.

2.4.5 Wiring the Battery Bank

WARNING: Lethal currents will be present if the positive and negative cables attached to the battery bank touch each other. During the installation and wiring process, ensure the cable ends are insulated or covered to prevent touching/shorting the cables.

Info: DO NOT connect the DC wires from the battery bank to the inverter until 1) all DC wiring is complete, 2) the correct DC overcurrent protection has been installed, and 3) the correct DC voltage and polarity have been verified.

Depending upon the voltage of the batteries (6 or 12 VDC), the batteries must be wired in series, parallel, or series-parallel to provide the correct voltage. The interconnecting DC wires must be sized and rated exactly the same as those used between the battery bank and the inverter.

Place the batteries as close as practical to the inverter, preferably in an insulated and ventilated enclosure. Allow adequate space above the batteries to access the terminals and vent caps (as applicable). Also, allow at least 1” (2.5 cm) of space between the batteries to provide good air flow. DO NOT mount the batteries directly under the inverter.

CAUTION: Install batteries in a well ventilated area. Batteries can produce explosive gasses. For compartment or enclosure installations, always vent batteries to the outside.

Info: To ensure the best performance from your inverter system, batteries should be of the same size, type, rating, and age. Do not use old or untested batteries.

2.4.6 Appliances and Run Time

The CSW2012-X inverter can power a wide range of household appliances including small motors, hair dryers, clocks, and other electrical devices. As with any appliance using batteries for power, there is a certain length of time that it can run—this is called “run time.” Table 2-3 below provides estimates of power consumption and run time for various appliances using a 12V-120AH battery bank.

Table 2-3, Appliance Power Consumption and Run Time

Load	Consumption	Estimated Run Time
Cordless Phone	5W	180 hrs
Clock/Radio	8W	135 hrs
Table Lamp	40W/60W	27 hrs/18 hrs
Freezer (8.8 cu ft)	80W	15 hrs
20” LCD TV	100W	11.5 hrs
Refrigerator (18 cu ft)	120W	9 hrs
Sump Pump (1/2 hp)	350W	3 hrs
Microwave (mid-size)	1000W	49 min
Coffee Maker	1200W	37 min

2.4.7 Wiring the Inverter to the Battery Bank

CAUTION: The inverter is NOT reverse polarity protected—if the positive terminal of the battery is connected to the negative terminal of the inverter and vice versa, severe damage to the inverter will occur and this will void the warranty. Before connecting the DC wires from the batteries to the inverter, verify the correct battery voltage and polarity using a voltmeter. If necessary, color code the cables (with colored tape): red for positive (+), and white for negative (-) to avoid polarity confusion.

Info: The DC overcurrent device (i.e., circuit breaker or fuse) must be placed in the positive (red) DC cable line between the inverter's positive DC terminal and the battery's positive terminal (red)—as close to the battery as possible. For maximum protection, install it within 18 inches (45 cm) of the battery.

Follow the steps below to wire the inverter to the battery bank:

1. Route an appropriately sized DC negative wire (marked white) from the negative terminal of the battery bank to the inverter's negative terminal (Figure 1-3; Item 15).
2. Mount the fuse/disconnect assembly (or circuit breaker) as near as practical to the batteries and leave open (i.e., no power to inverter).

WARNING: DO NOT close the DC circuit breaker or connect the fuse to connect battery power to the inverter at this time. This will occur after the installation is complete.

CAUTION: If connecting live battery cables to the inverter DC terminals, a brief spark or arc may occur; this is normal and due to the inverter's internal capacitors being charged.

3. Route and connect an appropriately sized DC positive wire (marked red) from the inverter's positive DC terminal (Figure 1-3; Item 14) to one end of the fuse/disconnect assembly (or circuit breaker).
4. Connect a short wire (same rating as the DC wires) to the other side of the DC circuit breaker (or one end of the fuse/disconnect assembly) and the other end of that short wire to the positive terminal of the battery bank (see Figure 2-1 for reference). This is essential to ensure even discharging across the entire battery bank.
5. Ensure the DC wire connections (on the batteries, inverter, and DC circuit breaker/fuse) are flush on the surface of the DC terminals, and all hardware used to hold these connections are stacked correctly (see Figures 2-4 and 2-5). Verify all DC connections on the inverter are torqued correctly (see Table 2-1), and the total cable distance from the inverter to the battery is within the requirement of Section 2.4.1 (DC Wire Sizing).
6. Once the DC connections are completely wired and tested, coat the terminals with an approved anti-oxidizing spray.
7. If the batteries are in an enclosure, perform a final check of the connections to the battery terminals, then close and secure the battery enclosure.
8. Route an appropriately sized DC ground wire (see Table 2-2) from the inverter's DC chassis ground connection to a dedicated system ground.
9. Once the entire installation is complete and all connections verified, close the fuse disconnect (or circuit breaker) to provide power to the inverter.

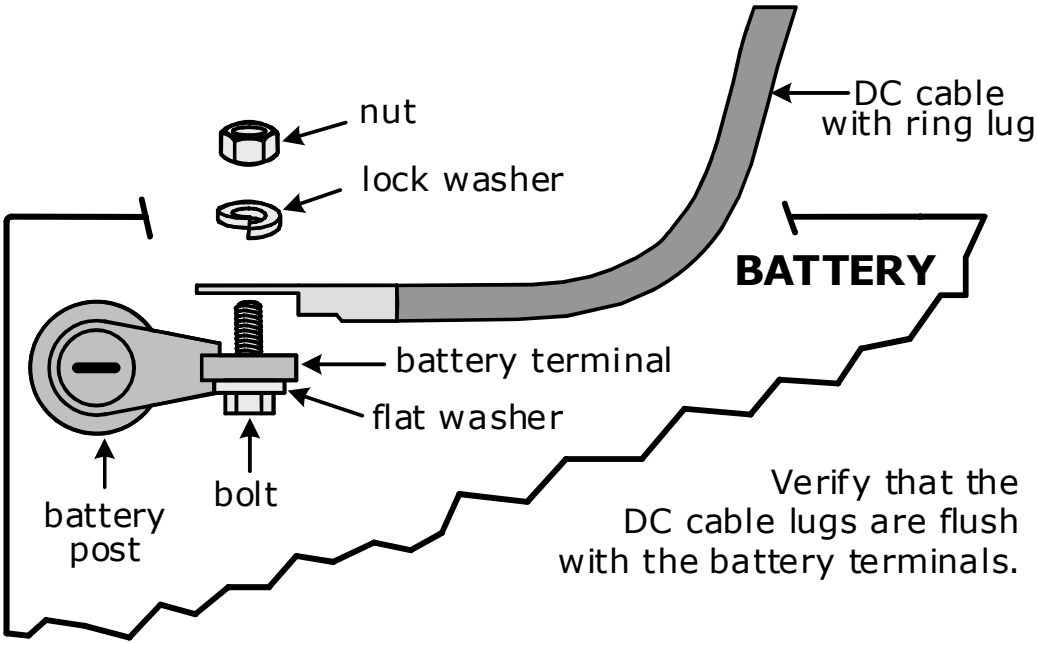

Figure 2-4, DC Cable to Battery Terminals

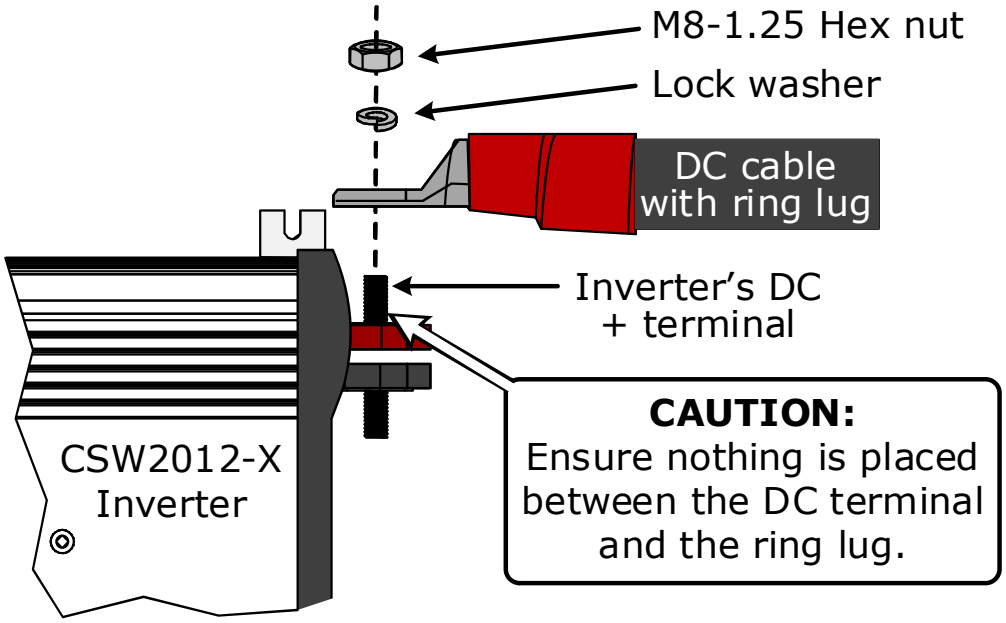

Figure 2-5, DC Cable to Inverter's DC Terminals

2.5 AC Wiring

This section provides information on how to make the AC connections to the inverter using the correct AC wire size and corresponding overcurrent protection.

2.5.1 Pre-AC Wiring Requirements

WARNING: DO NOT connect the inverter's output to an AC power source. This could cause severe damage to the inverter and is not covered under warranty.

CAUTION: Before installing any AC wiring, review all safety information in this manual to ensure a safe and long-lasting system.

• Always use properly rated circuit breakers. If using an electrical sub-panel, circuit breakers can be moved from the main electrical panel to the sub-panel only if the breakers are also listed to be installed in the sub-panel.

• AC wiring must be copper wire and be approved for the application (i.e., residential, RV, or marine wiring).

• The wire sizes recommended in this manual are based on the ampacities given in Table 310.16 (in conduit) or Table 310.17 (in free air) of the National Electrical Code, ANSI/NFPA 70, for 75ºC (167ºF) copper wire based on an ambient temperature of 30ºC (86ºF).

2.5.2 AC Wire Size and Overcurrent Protection

If wiring to the AC input and output terminals, the wiring must be sized per the local electrical safety code requirements to ensure the wire's ability to safely handle the inverter's maximum load current. The AC wiring must be protected from short circuits and overloads by an overcurrent protection device and have a means to disconnect the AC circuits. AC overcurrent protection is not included in the inverter and must be provided as part of the inverter installation. The AC overcurrent protection device must be a circuit breaker or a fuse/disconnect and be properly sized and branch circuit rated for the wire it is protecting and the appliances being powered.

If you need to supply more than 20A of current to the loads or if the GFCI protection is not required, then wire to the L1/N1 output terminals. When wired to the L1/N1 output terminals, the pass-thru capacity of the CSW2012-X is limited by the internal transfer relay contacts, which is 30A (3000W) maximum for resistive loads (lower for inductive loads such as electric motors, etc.). For a 30-amp pass-thru capability, a 30-amp branch rated circuit breaker is required on the AC input, which corresponds to a minimum cable size of #10 AWG (5.3 mm^2).

If wiring to the L2/N2 output terminals (GFCI protected), the pass-thru capacity of the CSW2012-X inverter is limited to 20 amps (2400W) maximum by a supplementary breaker inside the inverter. For a 20-amp pass-thru capability, a minimum cable size of #12 AWG (3.3 mm^2) is recommended.

Note: *The AC 2 (L2/N2) output terminals are connected to the load side of the GFCI receptacle, and are under the influence of the receptacle's "Test" and "Reset" buttons.*

2.5.3 AC Neutral to Safety Ground Bonding

Electrical safety standards for wiring RV/truck and marine installations in the United States require the neutral and safety ground to be connected at the AC source; whether it is the utility feed in the RV Park/Marina, an inverter, or a generator. This is to establish a specification that maximizes the possibility that a circuit breaker will activate if a hot wire-to-ground fault occurs. These standards also require that the AC neutral be connected to safety ground (often called a "bond") in one, and only one, place at any time. The single bond is established in order to make the electrical panel's neutral line safe, by connecting it to ground. Without this bond, the neutral can have up to 60 VAC with respect to ground. On the other hand, if more than one bond is established, currents can circulate between neutral and ground and cause "ground-loop" currents. These ground-loops can trip GFCIs, cause an electric shock hazard, and may be the reason for other annoying side effects.

In applications where you are using an inverter as one of your AC sources along with another AC source (i.e., utility power or generator), there is the potential of having multiple connections (bonds) between neutral and ground. Therefore, you must ensure that the inverter does not also connect the neutral-to-ground while the other AC source is actively powering the inverter loads. This can be prevented if your inverter is equipped with automatic neutral-to-ground switching.

WARNING: In most electrical systems, the neutral-to-ground bond is located in the main utility service entrance panel. Remove any bond downstream from the inverter to prevent multiple bonds. If there is an inverter sub-panel—separate from a main electrical panel—it should have a removable wire that allows the neutral bus to be unbonded from the ground busbar.

CAUTION: The AC input neutral terminal is electrically isolated from the AC output neutrals terminals (N1/N2) while inverting. This is related to the neutral-ground bonding requirement and helps prevent ground-loops. The input neutral and output neutrals must not an any time be connected together or damage to the inverter may occur.

The CSW2012-X inverter has automatic neutral-to-ground switching to specifically work in multiple source or mobile (i.e., truck/RV/boat) applications. The CSW2012-X inverter uses an internal relay that automatically connects the AC neutral output terminal to the vehicle/boat's ground while inverting (Inverter mode) to provide the neutral-to-ground bond. However, when an external AC source (i.e., shorepower or a generator) is connected, another neutral-to-ground connection is introduced in the system. When the CSW2012-X inverter is connected to this external AC source and goes into By-Pass mode, the internal relay automatically opens the neutral-to-ground connection. This design keeps two neutral-to-ground connections from occurring at the same time, thereby preventing an electrical shock hazard between the vehicle/boat's neutral and the external AC source's neutral.

2.5.4 AC Terminal Block Connections

The CSW2012-X has a two-pole AC input terminal block, a four-pole AC output terminal block and one AC ground screw to connect the inverter's AC input and output wiring. These terminal blocks (see Figure 1-2, Items 9 and 10) allow a service/distribution panel (main panel) to be wired to the inverter's input, and also allows a dedicated panel (sub-panel) between the inverter's output wiring and the AC loads. To access and view the AC terminal blocks and ground screw, remove the four Phillips screws holding the AC wiring access cover (see Figure 1-1, Item 1).

Each connection on the AC terminal block is rated to accept one #14 to #6 AWG (2.1 to 13.3 mm^2) CU stranded wire, or two #12 AWG (3.3 mm^2) CU stranded wires. Each connection uses a M3.5 slotted head screw, and the maximum tightening torque is 16 lbf-in (1.8 N-m).

CAUTION: The AC input neutral terminal (N) is electrically isolated from the AC output neutrals terminals (N1/N2) while inverting. This is related to the neutral-ground bonding requirement and helps prevent ground-loops. The input neutral and output neutrals must not an any time be connected together or damage to the inverter may occur.

Info: To comply with ABYC requirements for marine installations, the AC terminal blocks have a stainless steel wire protector to prevent wire damage from the set-screw.

The AC ground uses a Phillips head screw. If wiring multiple grounds (i.e., input and output ground connections), use a pressure or mechanical connector to attach the wires to the AC ground screw.

2.5.5 AC Conductor Wiring Steps

The following sections are basic guidelines for installing and connecting the AC wiring to and from the CSW2012-X inverter.

WARNING: Before making any AC connections, make sure the inverter is disconnected from the battery and no AC power is connected to the inverter.

Before wiring:

a) Remove the AC access cover (Figure 1-1, Item 1) by unscrewing the four screws located at the front of the AC compartment cover—to access the AC terminal blocks.

b) Place strain relief clamps on the AC openings (Figure 1-2, Item 7).

c) After all wires are routed through the AC openings on the inverter, tighten the strain relief clamp securely on the wires—always leave a little extra slack in the wiring.

Wiring the Inverter AC Input

1. Route the AC input wires (hot, neutral, and ground) from the AC electrical main panel through one of the strain relief clamps on the inverter.

2. Connect the hot wire (BLACK) from the main panel's dedicated 30A breaker to the inverter's AC input "L" terminal. ***Note:*** *A 20A breaker can be used if only connecting the L1/N1 output terminals (see Wiring the Inverter AC Output section on next page).*

3. Connect the neutral (WHITE) from the main panel's neutral busbar to the inverter's AC input "N" terminal.

Wiring the Inverter AC Output

WARNING: DO NOT connect the inverter's output to an AC power source. This could cause severe damage to the inverter and is not covered under warranty.

The AC Output has three types of AC connections:

- Use the GFCI outlet to power AC loads – This configuration does not require AC output installation. Plug the AC load into the GFCI outlet. During By-Pass mode, the AC output is limited by the rating of the inverter's 20A breaker.
- Hardwire the L2/N2 AC Output terminals (with GFCI Protection) – This configuration connects the AC loads directly to the output (load side) of the GFCI outlet. The AC output is limited by the rating of the inverter's 20A breaker and is also connected to the GFCI outlet's "Test" and "Reset" buttons.
- Hardwire the L1/N1 AC Output terminals – This configuration connects the AC loads directly to the output side of the internal transfer relay. The AC output is limited to 30 amps (the rating of the transfer relay contacts).

If hard-wiring the AC output wires:

1. Route the AC output wires (hot, neutral, and ground) from the AC electrical sub-panel through the other strain relief clamp on the inverter.

2. Connect the hot (BLACK) wire from the inverter's hot/line (L1 or L2) output terminal to the sub-panel's main breaker.

3. Connect the neutral (WHITE) from the inverter's neutral (N1 or N2) output terminal to the sub-panel's neutral busbar.

Wiring the Inverter AC Ground

1. Connect the ground (GREEN) wire from the main panel's ground busbar and the ground (GREEN) wire from the sub-panel's ground busbar to the inverter's AC GROUND terminal.

AC Wiring Inspection

1. Verify all wire runs are secured. When installed in a mobile installation, use wire ties or other non-conductive fasteners to prevent chafing or damage from movement and vibration.

2. Verify strain reliefs or grommets are in place to prevent damage to the wiring or conduit where it passes through walls/bulkheads or other openings.

3. After verifying all AC connections are correct, ensure all inverter AC terminals are torqued correctly.

4. Replace the AC wiring access cover and the covers on the main electrical/ distribution panel.

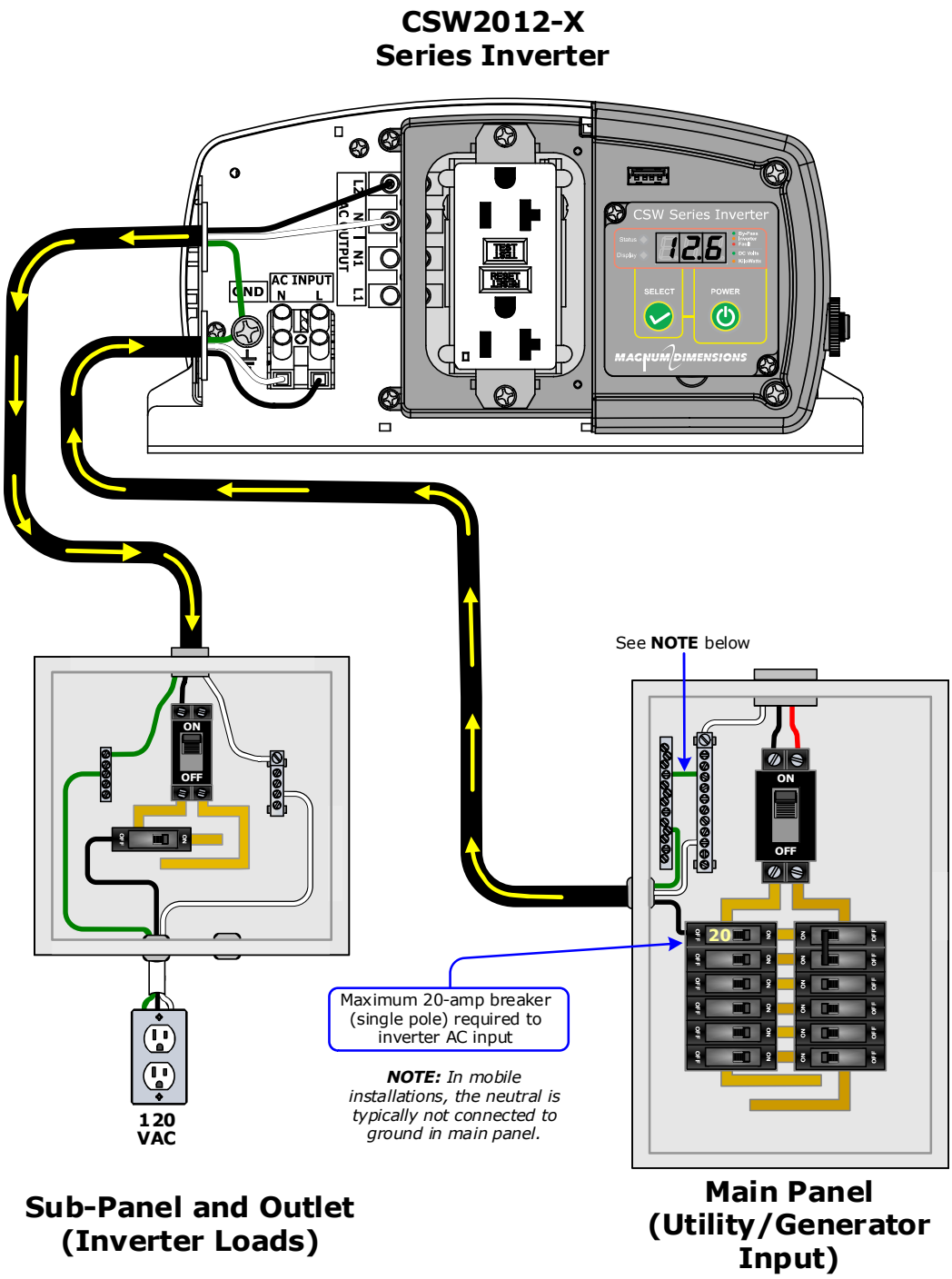

Figure 2-6, AC Wiring (20A By-Pass and GFCI output))

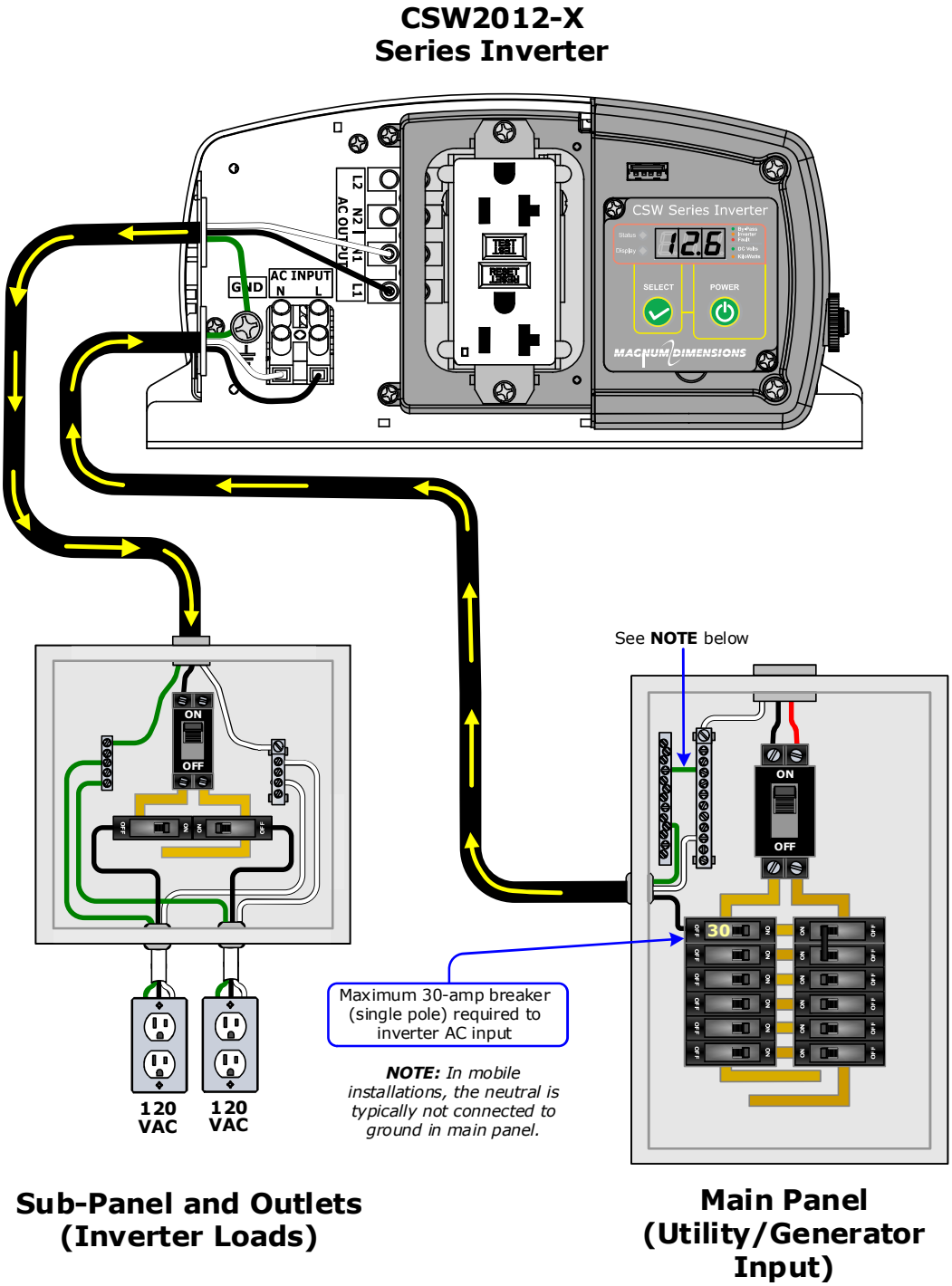

Figure 2-7, AC Wiring (30A By-Pass)

2.5.6 Removing the Display Panel

The display panel on the inverter can be removed and installed in a different location using a longer 6-pin standard telephony cable (also referred to as a RJ12 cable). See Figure 2-8.

- Remove the 2 screws at the front of the display panel, and then disconnect the small cable from the inverter.
- Install the remote cable in your desired location and connect one end of the remote cable to the inverter and the other end of the cable to the display panel. Please note polarity.

Remote cable

To locate the display panel in a remote location, the longer cable needs to be a 6-conductor telephony type with 6P6C (6-position/6-conductor) connectors on each end. With this cable, when the 6P6C connectors are held side by side with both of the connector tabs facing the same way, the color of the conductors in each connector are the opposite from top to bottom as shown in Figure 2-8.

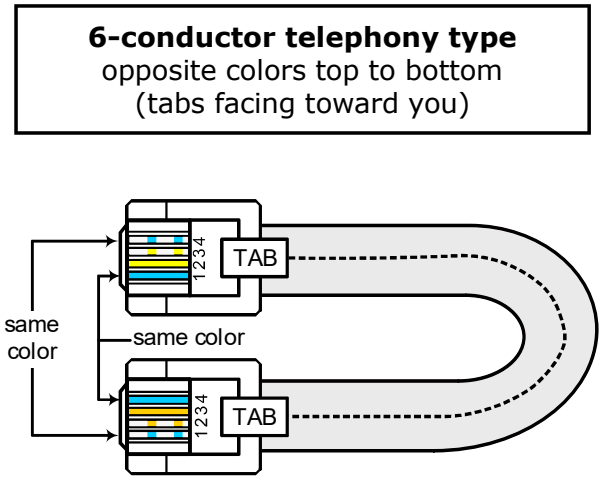

Figure 2-8, Remote Cable

2.6 Testing the Inverter

Before proceeding, you must first test whether the inverter was successfully installed. Use the functional test below to ensure the inverter is functioning properly.

2.6.1 Inverter Functional Test

After all electrical connections to the inverter, batteries, AC source, and loads (using a sub-panel) have been completed, follow these steps to test the installation and the inverter's operation.

1. Check the battery voltage and polarity before connecting the batteries to the inverter. Use a multimeter to verify 10.5 to 15.5 VDC at the batteries' positive and negative terminals.

2. Apply battery power to the inverter by switching the DC disconnect on (or close the DC circuit-breaker)—the inverter will remain off.

3. Prior to turning on the inverter, make sure all connected loads (e.g., appliances) are switched off or disconnected from the AC outlets.

4. Press and hold the Power button until a beep sound is heard (about 1 second)—to turn the inverter on. Verify that the inverter's revision and version numbers of the inverter as well as the measured battery voltage are shown on the display, and the Status light comes on (amber). This indicates the unit is in Inverter mode—running from battery power.

5. Check the output voltage of the inverter by connecting a multimeter to the outlets powered by the inverter. Verify the voltage is from 104 to 127 VAC.

6. Plug a small AC load (e.g., 40W light bulb) into the GFCI's outlet. Turn it on and verify it comes on. Continue to keep the load connected and turned on.

Note: *If the bulb does not light, the GFCI may have tripped and needs to be reset.*

7. Press and hold the Power button until a beep sound is heard (about 1 second)—to turn the inverter off. The inverter's status indicator and the connected load should go off.

8. Apply AC power to the inverter's AC input. After the AC input power is qualified (approximately 5 seconds), the inverter will automatically come on. Verify that the display begins showing the revision (r#.#) and the connected load comes on, and the Status light begins to blink (amber). This indicates the unit is connected to AC power. After approximately 15 more seconds, the inverter will now be in By-Pass mode—transferring the incoming AC power through the inverter to the inverter's AC output and powering the connected load. When this happens, verify the inverter's status indicator turns green and the connected load stays on.

9. Disconnect the incoming AC power to the inverter and verify the connected load remains on. The inverter is now in Inverter mode.

If the inverter passes all the steps, the inverter is ready for use.

If it fails any of the steps, refer to the troubleshooting information in Section 4.0.

3.0 Operation

The CSW1012-X inverter has two normal modes of operation; Inverter mode, which powers your loads using the batteries, and By-Pass mode, which transfers the incoming AC power (i.e., shorepower or a generator) to power your loads.

3.1 Inverter Mode

In Invert mode, the inverter supplies AC power to your appliances by inverting the DC power from the battery. The amount of time the inverter can provide power is directly related to the capacity of the battery (or battery bank).

When the CSW2012-X is first connected to battery power, it is off. To turn the inverter on, press and hold the Power button until a beep sound is heard (about 1 second).

OFF – When the inverter is OFF, no power is used from the batteries to power the AC loads, and the status LED will be OFF.

ON – When the inverter is turned ON, it operates either by "searching" or "inverting", depending on the connected AC loads and the inverter PS setting (see Table 3-2).

Info: The factory default setting for Inverter mode is PS1, which turns the Search mode feature off.

Searching – The Search feature is provided to conserve battery power when AC power is not required. If this feature is enabled, the inverter pulses the AC output looking for an AC load (i.e., electrical appliance). Whenever an AC load (greater than 10 watts) is turned on, the inverter recognizes the need for power and automatically starts inverting. When there is no load (or less than 3 watts) detected, the inverter automatically goes back into Search mode to minimize energy consumption from the battery bank.

Inverting – When the inverter is on and not searching, the CSW2012-X uses the DC power from the battery to supply 120 VAC power to your loads. The amount of time the inverter can be inverting and providing power is directly related to the amount of AC loads that are connected, and the capacity of the battery bank.

3.2 By-Pass Mode

If AC power from an external source (utility or generator) is connected and qualified on the inverter's AC input, the inverter will automatically go into By-Pass (pass-through) mode and pass the incoming AC power through the inverter to power your AC loads. If there is a power failure or the AC power is disconnected, the inverter PS setting (see Table 3-2) determines how the inverter will respond.

Info: The factory default setting for Inverter mode is PS1, which enables the inverter to automatically transfer back to the Inverter mode when the AC power is removed.

Transfer time – When the AC power fails or is disconnected, the relay transfers from By-Pass mode to Invert mode in less than 30 milliseconds. When switching from Invert mode to By-Pass mode, the inverter waits approximately 20 seconds to ensure the grid is stable (or the generator is up to speed) and then makes the transfer.

3.3 Display Panel Operation

This section provides information on the display panel (Figure 1-1, Item 5).

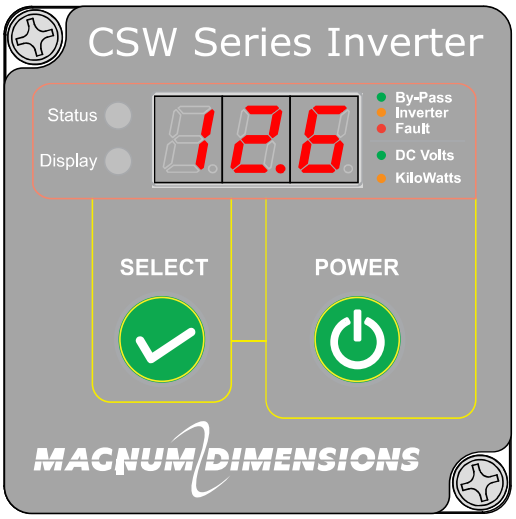

Figure 3-1, Display Panel

3.3.1 LED Indicators

The LED indicators on the front display panel are used to indicate the inverter's status. Use Table 3-1 to determine the inverter status.

Table 3-1, Display Functions/Statuses

Status LED	Display LED	Display	Function/Status
Green (solid)	Green	12.5	By-Pass mode. Display shows battery voltage in DC volts.
Amber (solid)	Green	12.5	Inverter mode. Inverter running and display shows battery voltage in DC volts.
	Amber	0.80	Inverte) mode. Inverter is running, and display shows output power in kW (800W as shown). The Select button has to be pressed.
Amber (flashing)	Inverter mode. AC input is detected and the unit will switch to By-Pass mode within 20 seconds.		
Red (solid)	OFF	E01-E12	Unit has shut down. Display shows an error code (see error code reference chart below).

3.3.2 Understanding the Power and Select Buttons

A beep sound occurs every time the Power or Select button is activated (i.e., pressed for 1 second).

Power button – Turns the inverter On/Off during Inverter mode. Press and hold it for 1 second to turn the inverter either ON or OFF.

Note: *The Power button can be used to turn the AC output off during AC By-Pass mode with PS4 setting—without the need to disconnect the AC input as per the PS1 setting. See Table 3-2 or Section 3.3.3.*

Select button – Used to check the inverter settings. Press the Select button several times to scroll down to view the inverter's present setting.

3.3.3 Inverter Settings (enter Setting Mode)

To change an inverter setting, enter Setting mode by pressing the Power and Select buttons together for about 5 seconds until a beep is heard. Use Figure 3-2 to set the inverter settings. See Table 3-2 for information on the different settings available for the inverter.

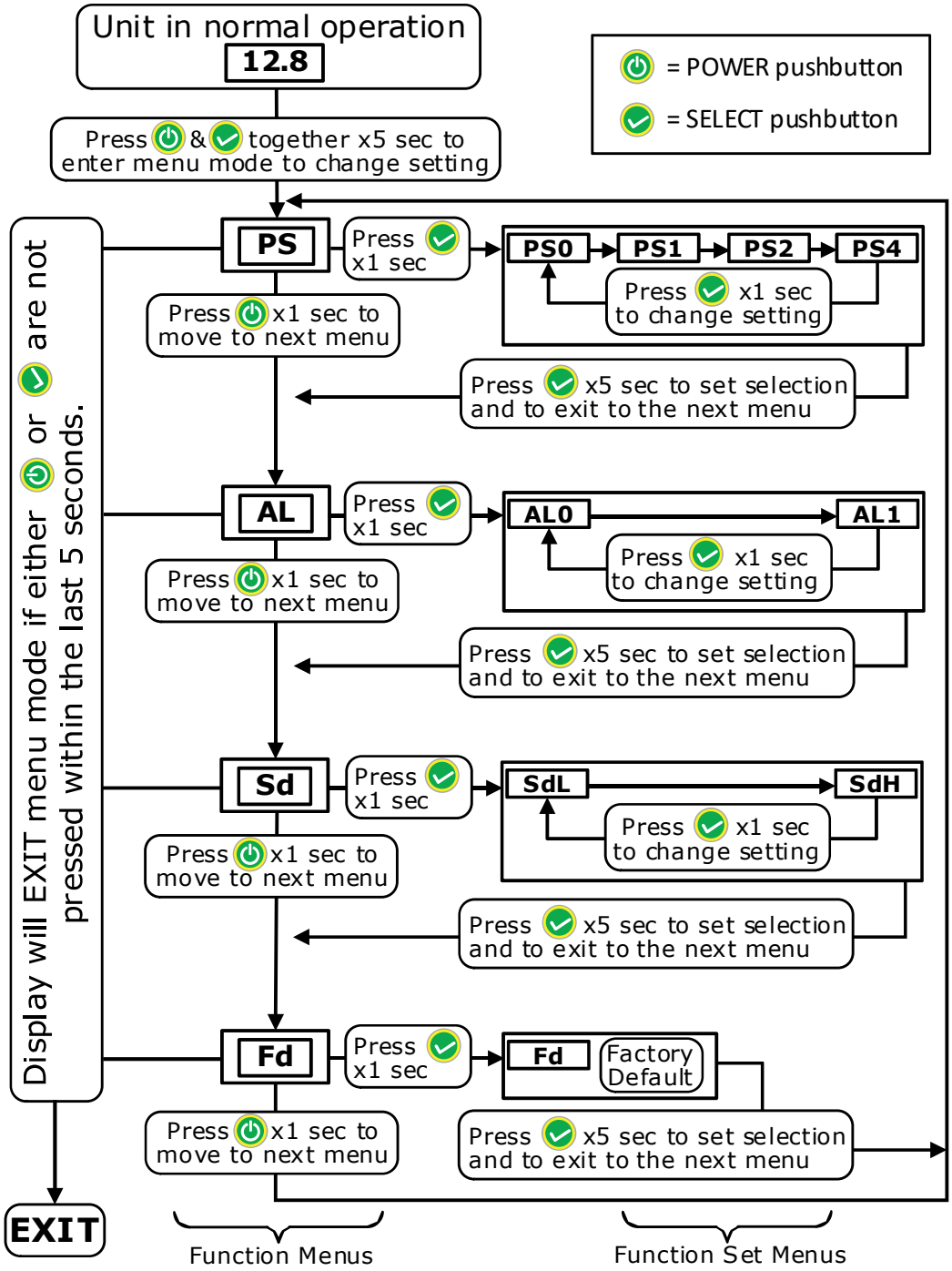

Figure 3-2, Inverter Setting Flow Chart

Table 3-2, Inverter Settings

Inverter Settings	
PS0	The inverter is disabled. The AC Output terminals are getting power from the utility (AC input) only. When utility power is not available, the unit will not provide an AC backup function from the inverter and the display will automatically turn off in approximately 10 seconds. When the Power button is pressed again, the display will turn on for another 10 seconds. To enable the inverter or to turn on the backup function, the PS0 setting has to be changed to a different setting.
PS1	The inverter is in By-Pass mode with Search mode set to OFF. The unit will provide an AC backup function when utility power is not available.
PS2	The inverter is in Standby mode with Search mode set to ON. The unit will provide a continuous backup function only when utility power is unavailable AND the connected output load is >10W. Once it is on, the unit will automatically return to Search mode and turn off when the connected AC load drops to <3W. ***Note:*** *During Search mode, the inverter turns on every few seconds for a few AC cycles to check on the 10W power consumption.*
PS3	Not used.
PS4	Performs same function as PS1. The Power button can be used to turn AC output on and off, even with AC input power being present in By-Pass mode. When the unit is turned off in By-Pass mode using the Power button, the display will continue to show battery voltage and the Status LED will turn off.
Battery Under Voltage Settings	
SdL	Battery under-voltage setting is set to LOW (normal operation). Under-voltage alarm: 11.0 VDC Under-voltage alarm recovery: 11.3 VDC Under-voltage shutdown: 10.5 VDC Under-voltage recovery: 12.0 VDC
SdH	Battery under-voltage setting is set to HIGH (setting to avoid battery over-discharge when connected to a car start battery). Under-voltage alarm: 12.1 VDC Under-voltage alarm recovery: 12.3 VDC Under-voltage shutdown: 11.8 VDC Under-voltage recovery: 12.6 VDC
Alarm Settings	
AL0	Fault and warning audible alarm is disabled. Display panel only shows error code, and the audible alarm will not sound.
AL1	Audible alarm will sound when a fault or warning occurs.
Factory Default Settings	
Fd	Resets all settings to Factory default settings (PS1, SdL, AL1).

3.4 Understanding Loads

The inverter can power most loads within its power rating, however, there are special conditions that can cause a load to behave differently than expected. Following are some common problems encountered when using this inverter.

USB loads – When using the USB connector, be sure that the device you will be connecting will accept 5 volts (≤ 750mA) and can be charged or powered using another power source. The USB port can safely power and charge alot of devices such as: MP3 players, mobile phones, and portable video game players. However, some devices such as GPS receivers and some cameras may not work and may even be damaged. Refer to the owner's guide for each device to determine its compatibility.

Motor loads not starting – Some appliances, particularly those with induction motors, require a much higher start-up surge than they do when running. Pumps, freezers and refrigerators (compressors) are the most common. The inverter may not be able to start some of these appliances even though their rated current draw is within the inverter's limits. If a motor-operated appliance refuses to start, observe the VOLTS indicator on the digital display while you are trying to start the appliance. If the display shows a battery drop below 11 volts while the inverter is trying to start the motor, this may explain why the appliance won't run. Make sure the length and diameter of the battery cables are appropriate. Check that the battery connections are good and that the battery is fully charged. If the cables are sized correctly, the connections are good, and the battery is charged, you may need a larger battery bank (see Loads turning on and off).

Loads turning off and on – If a load starts but quickly turns off, then the battery may not be able to deliver the necessary amperage to drive the load. If the battery bank cannot deliver the necessary amperage to drive a heavy load, the inverter will shut OFF due to low voltage (<10.5 VDC). The battery voltage can then slowly rise back above the low voltage reconnect voltage (11.8 VDC) causing the inverter to resume operation. As soon as the heavy load draws the batteries down, this cycle will continue unless the load is reduced or more batteries are added.

Loads too large – Although the CSW2012-X inverter can provide high surge power up to two times the rated output power, some appliances may still trigger the inverter shutdown/protection system. In these instances, a higher power inverter may be required.

Running several loads at once – Sometimes the total surge requirement of all the loads is higher than the CSW2012-X inverter can deliver. You may want to turn them on individually to ensure that the inverter does not have to deliver the starting current for all the loads at once.

4.0 Troubleshooting

When the inverter shows an error code, use Table 4-1 to determine what condition triggered the error/warning code and what corrective action is needed. Use Table 4-2 to troubleshoot your inverter based on the symptoms.

Table 4-1, Inverter Error Codes

Code	Condition	Corrective Action
E01	Input battery voltage is too low (<10.5 VDC). If it happens in By-Pass mode, the unit continues supplying AC output power. Otherwise, the AC output is shut down.	Immediately recharge the battery, and then restart the unit. Make sure the battery is connected to the unit.
E02	Input battery voltage is too high—the unit has shut down.	Check battery voltage, or determine if any external charger is connected to the battery bank.
E03	AC output has sensed an overload or short circuit and was shut down.	Check the load connected to the output. Reduce the load and then restart the unit.
E04	Internal temperature is too high—the unit has shut down.	Turn unit off, and then wait 15 minutes before restarting. Ensure the unit's air flow and fans are not blocked and ensure the unit's fans are running.
E05	Input battery voltage is low and has initiated a warning alarm (@11.2 VDC).	Recharge the battery—the unit will shut down shortly.
E06	Inverter mode. The connected AC output load is large and is close to the shutdown limit.	Reduce the load.
E07	Internal temperature is high and is close to the thermal shutdown limit.	Reduce the load and check if the unit's ventilation is blocked.
E08-11	Not used.	
E12	Internal transfer switch temperature is high—a unit shutdown occurs.	Reduce the load and check if the unit's fans are running and if the fans/ventilation are blocked.

Table 4-2, Troubleshooting

Problem	Possible Cause/ Condition	Solution
AC output turns on and off.	Search mode (PS2) enabled, and the AC load is <10W.	Normal condition when in Search mode. The load connected must be below the AC load sense threshold of 10W; so the power output will be pulsed every 10 sec for checking the load.
No AC output. Status LED is red.	Unit has shut down. Check the error code shown on the display.	Verify the error condition, and then make the necessary correction.
AC output only on L1/L2 output terminals.	The inverter's GFCI or 20A thermal breaker has tripped.	AC Output L1/N1 terminals are connected directly to the inverter's output. The terminals are not under the tripping influence of either the GFCI or the 20A thermal breaker on the unit.
No AC output. All the LEDs and the display are off.	The unit is off. ***Note:*** *The Power button's on/off action takes place at its release moment and after a "beep" is heard.*	Turn the unit on by pressing the Power button (when the unit is in Inverter mode, or in By-Pass mode if the PS4 parameter is set). Otherwise, the unit should always automatically turn on at the moment AC input power is connected.
	No power coming into the unit.	Check the battery DC fuse, the disconnect switch (if installed), and the AC input source. The AC input branch breaker is either tripped or turned off.
No AC output to the GFCI and L2/N2 output terminals. The Status LED is green or amber.	GFCI tripped.	Check the AC load for a ground fault, and reset the GFCI. Make sure the loads do not have the neutral and ground bonded.
		If no load plugged in to GFCI, there may be humidity inside. Try drying with a hairdryer. Ensure unit is in a dry area.
	Note: *The GFCI contains a lockout feature that prevents a RESET if there is no power being supplied to it. Therefore, make sure to force By-Pass mode or do not have either the PS0 or PS2 setting when in Inverter mode, before resetting.*	
	The unit's 20A thermal breaker is tripped.	Check loads and reset the 20A thermal breaker.

Problem	Possible Cause/ Condition	Solution
During AC input power outage, there is no AC output power when battery power is available.	Unit is set to "Non-Backup" mode (PS0) and AC input power is not available.	Change the PS0 setting to a different setting if you want to turn the inverter on. With the PS0 setting, the inverter is completely off. When the AC input power is not available and the Power button is pressed once, the display and LEDs remain working for only about 30 seconds. With this setting, the unit provides AC output power only when AC input power is available.
E01 or E05 alarm activates in By-Pass mode.	Unit is operating normally. The alarm indicates the battery voltage is low or the battery is not connected at all, and there are external DC loads drawing currents from the inverter's current-limited trickle battery charger—enough to trigger either the E01 or the E05 alarm. However, the unit continues supplying AC output power.	Charge/connect the battery bank or disable all the audible alarms with the AL0 setting. ***Note:*** *The main purpose of the battery charger is to keep the unit's control electronics working even without a battery connected. Its power is not necessarily enough to work as a real trickle charger for your battery bank. Therefore, do not consider the unit as an inverter & charger.*
DC voltage is measured at the DC terminals without the battery being connected.	This is normal. The voltage is supplied by the inverter's trickle battery charger with current-limiting protection.	You can keep the battery disconnected. However, if the DC Input terminals of the unit are connected to a common DC bus being shared by other DC loads, a 12V back feeding to those DC loads can occur when the DC bus is disconnected from the common battery bank. In that case, the corresponding drawing current may trigger the E01 or E05 alarms. In cases where back feeding is not desirable, consider using a separate battery bank disconnect switch for the unit.

4.0 Troubleshooting

Problem	Possible Cause/ Condition	Solution
Heavy spark when connecting the battery power.	This is a normal condition. It occurs when the internal DC input capacitors (filter) are discharged after the battery was disconnected for at least 30-40 seconds.	Due to a sudden high DC surge (inrush) current that charges the internal big capacitors and quickly disappears (milliseconds) once capacitors get charged. Does not represent any drawing current from the battery.
The unit's 20A thermal breaker trips even when the unit is not in an overload condition.	This happens mainly in By-Pass mode when the maximum rating of the unit's breaker is exceeded.	For maximum capacity, use AC 1 (L1/N1) Output terminals which are out of the tripping influence of the GFCI outlet and the unit's 20A thermal breaker. Otherwise, do not exceed the current ratings on the GFCI outlet and AC 2 (L2/N2) Output.
The unit cannot be turned off when using the Power button in By-Pass mode.	This is normal. The unit has a PS1 (factory default) setting. Use the procedure on the right to turn off the unit. ***Note:*** *The Power button's on/off action takes place at its release moment and after a "beep" is heard.*	To turn unit off when in By-Pass mode: 1) disconnect the AC input that feeds the unit—forcing the unit into Inverter mode. 2) push and hold the Power button for 1 sec. (after hearing beep) to turn unit off.
		Set unit to PS4 mode. The Power button can now be used to turn the unit on and off when in either By-Pass or Inverter modes.
The display doesn't work as expected (no display or 888 shows) and the operability of the unit may be affected.	A loose contact or pin-out problems in the RJ12 detachable display panel cable may have occurred.	A short (7") RJ12 cable is used when the detachable display panel is unit-mounted (factory default). Alternatively, a 25ft. RJ12 cable is provided for installing the display further away. Swap cables to see if it makes a difference.
		Check the pin-to-pin conductivity of the cable and the corresponding pin-out as shown in Figure 2-8.
	Excessive EMI/ RFI interference (electromagnetic induction or electromagnetic radiation) emitted from an external source.	Avoid running the cable close to motors, power contractors/ relays, ballasts, transformers, or high voltage devices. In high noisy environments, consider using metal conduits or a shielded cable grounded at one end, and/or reduce cable length.

Problem	Possible Cause/ Condition	Solution
The GFCI outlet trips as soon as the load is connected to either L2/ N2 AC Output terminals or into the GFCI outlet.	There is a neutral-to-ground bonding in the load side.	Locate and remove the neutral-to-ground bonding on the AC load side. If the output of the inverter is connected to an existing distribution panel/ box, make sure the neutral-to-ground connections inside the panel/box use separate bus bars—the neutral one is isolated from the chassis ground. Otherwise, consider using the AC 1 (L1/N1) Output.
The input battery under-voltage warning (E05) and/or shutdown alarm (E01) occurs in advance even when the battery voltage seems to be OK.	Make sure you are measuring the voltage directly at the DC Input terminals of the unit—check the possible voltage drop between the battery posts and the unit's input terminals.	Excessive voltage drop between the battery bank and the inverter may be due to high resistance of the DC wires, the battery disconnect switch is turned off, or a faulty fuse/DC breaker. Make sure to use the recommended wire gauge and length. Try to use fuses (or DC breakers) with very low voltage drop (e.g., ANL type fuses, etc.).
	Battery bank with high internal resistance, resulting in a voltage drop proportional to the DC current draw from the unit.	Too much battery voltage drop due to an excessive draw of current in relation to the battery bank capacity. Increase the battery bank capacity (i.e., add more batteries in parallel) and/or reduce the load being fed by the inverter. Battery damaged and not able to keep a good state of charge. Replace the battery (or batteries).
	Battery bank is getting discharged.	This is a normal condition. An E05 warning followed by an E01 shutdown occurs while the battery bank is getting discharged. Charge the battery bank.

Problem	Possible Cause/ Condition	Solution
The input battery under-voltage warning (E05) and/or shutdown alarm (E01) occurs in advance even when the battery voltage seems to be OK. (Cont.)	Make sure to measure the battery voltage just before the E01 battery under-voltage shutdown in Battery (Inverter) mode occurs, and compare it with the corresponding voltage threshold in the specifications table (allow +/- 5% of tolerance).	Just after the E01 occurs, the battery voltage rapidly increases since the battery is not under a load condition after the inverter shutdown. This is normal in all the battery banks and can confuse the user thinking the under-voltage shutdown that triggers the E02 alarm occurs in advance at higher voltage thresholds than the ones specified.
	The E05 warning and E01 shutdown alarm occurs well in advance due to the SdH setting.	If you want to extend the run time of the battery bank as much as possible without the need to keep enough battery state of charge for engine cranking purposes, make sure to set the under-voltage shutdown threshold to a low values setting (SdL = factory default setting) other than the SdH.

5.0 Specifications

Table 5-1, CSW2012-X Specifications

Model	CSW2012-X
Electrical Specifications	
Continuous Power[1]	2000 W
Surge Power (Peak)[2]	4000 W
AC Output Voltage (12.5V)	120 VAC RMS ± 5%
AC Output Current	16.6 AAC
AC Output Voltage Range	104-127 VAC
AC Output Frequency	60 Hz ± 0.5 Hz
AC Output Waveform)	Pure sine wave (<3% THD)
AC Output Receptacle	NEMA 5-15, Dual GFCI with LED
Optimum Efficiency	>90%
DC Input Voltage (Nominal)	12.5 VDC
DC Operation Voltage Range[3]	10.5 - 15.5
DC Input Current (Full Load)	38 DCA
DC Input Current (No Load)	<1.5 ADC
DC Output (USB port)	5V, 750 mA
Protection	
Low Voltage Alarm (Recovery)	11.0 VDC (11.3 VDC)
Low Voltage Shutdown (Recovery)	10.5 VDC (12.0 VDC)
High Voltage Shutdown[3]	15.5 VDC
AC Transfer Switch	
Transfer Time	< 30 ms
Transfer Relay Rating	30A (resistive load)
AC Output: L1/N1 (Hardwire)	30A Max
AC Output: L2/N2 (Hardwire)	20A Max
AC Output: GFCI Outlet	20A Max
Display Panel	
LED Status Indicators	Status and Display
Digital display	DC Volts in, power out, error codes
General Specifications	
Operating Temperature	32°F to 104°F (0°C to 40°C)
Inverter Weight	13.0 lb (5.9 kg)
Inverter Size (L x W x H)	17.1 x 9.1 x 4.5” (43.5 x 23 x 11.5 cm)
Warranty	One Year
Regulatory Approval	
Conforms to UL STD 458, Certified to CSA STD C22.2 No. 107.2-01	
EMI: FCC Part 15 Class B	

1: Specifications met when DC voltage at nominal (12.5V) and temp at 25°C.
2: *Surge ratings are based on resistive load (output voltage may drop).*
3: Damage can occur if input voltage exceeds 16 VDC.

Appendix A - Battery Information

Battery Bank Sizing

The size of the battery bank determines how long the inverter can power the AC loads without recharging. The larger the battery bank, the longer the run time. Size your battery bank to the system's AC load requirements and the length of time required to run the load from the batteries. In general, the battery bank should not be discharged more than 50%.

Battery Types

Batteries are available in different sizes, amp-hour ratings, voltage, and chemistries; they also come in liquid or gel, vented or non-vented, etc. They are also available for starting applications (such as an automobile starting battery) and deep discharge applications. Only the deep cycle types are recommended for inverter applications. Choose the batteries best suited for the inverter installation and cost. Use only the same battery type for all batteries in the bank. For best performance, all batteries should be from the same lot and date. This information is usually printed on a label located on the battery.

Battery Configuration

The battery bank must be wired to match the inverter's DC input voltage specifications (12 VDC). In addition, the batteries can be wired to provide additional run time. The various wiring configurations are:

Series Wiring

Wiring batteries in a series increases the total battery bank output voltage. A series connection combines each battery in a string until the voltage matches the inverter's DC requirement. Even though there are multiple batteries, the capacity remains the same. In the example below (Figure A-1), two 6 VDC/200 AHr batteries are combined into a single string – resulting in a 12 VDC/200 AHr bank.

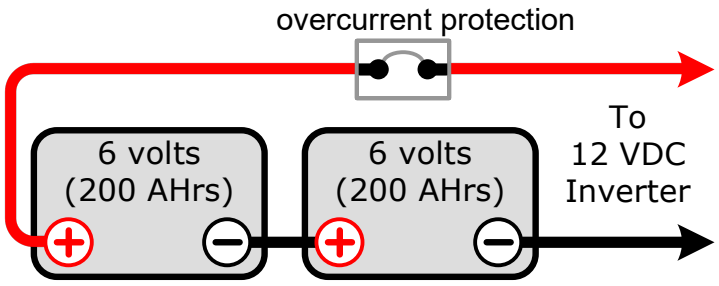

12 volt battery bank (total capacity = 200 AHrs)

Figure A-1, Series Battery Wiring

Parallel Wiring

Wiring the batteries in parallel increases the total run time the batteries can operate the AC loads. A parallel connection combines overall battery capacity by the number of batteries in the string. Even though there are multiple batteries, the voltage remains the same. In the example below (Figure A-2), four 12 VDC/100 AHr batteries are combined into a single 12 VDC/400 AHr battery bank.

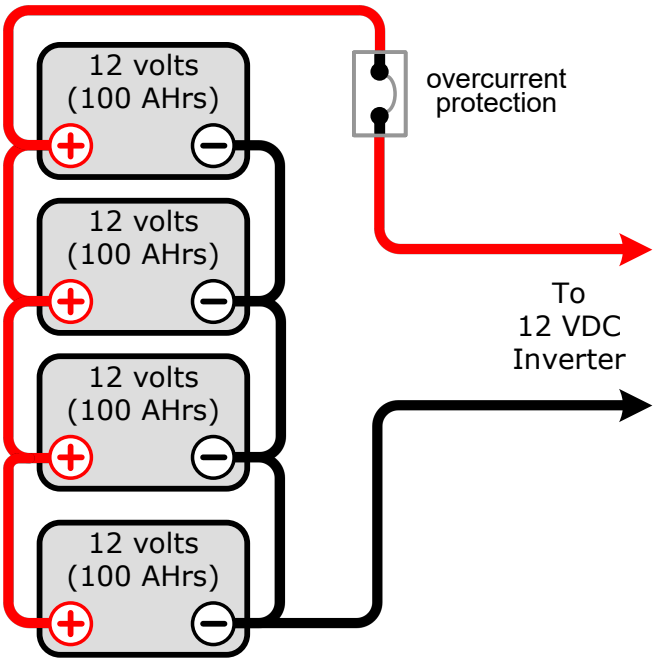

12 volt battery bank (total capacity = 400 AHrs)

Figure A-2, Parallel Battery Wiring

Series-Parallel Wiring

A series-parallel configuration increases both voltage (to match the inverter's DC requirements) and capacity (to increase run time for operating the loads) using smaller, lower-voltage batteries. In the example below (Figure A-3), four 6 VDC/200 AHr batteries are combined into two strings resulting in a 12 VDC/400 AHr battery bank.

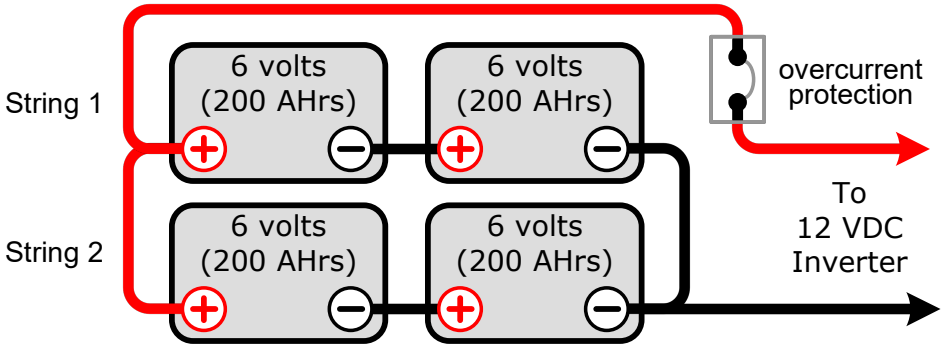

12 volt battery bank (total capacity = 400 AHrs)

Figure A-3, Series-Parallel Battery Wiring

Appendix B - Preventive/Periodic Maintenance

Recommended Inverter and Battery Care

The CSW2012-X inverter is designed to provide you with years of trouble-free service. Even though there are no user-serviceable parts, it is recommended that every 6 months you perform the following maintenance steps to ensure optimum performance and extend the life of your batteries.

WARNING: Prior to performing these checks, switch both the AC and DC circuits OFF.

- Visually inspect batteries for cracks, leaks, or swelling – replace if necessary.
- When possible, recharge your batteries when they are about 50% discharged or earlier. This gives them a much longer life cycle than recharging when they are almost completely discharged.
- Use baking soda to clean and remove any electrolyte spills or buildups.
- Check and tighten all battery hold down clamps.
- Clean and tighten all DC terminals (battery and inverter) and connecting cables.
- If used, check and ensure the screws on the AC input terminals are tight.
- Check and fill battery water levels (Liquid Lead Acid batteries only).
- Check individual battery voltages (replace those that vary more than 0.3 VDC of each other).
- Check all cable runs for signs of chafing – replace if necessary.
- Check the inverter's cooling vents – clean as necessary to prevent the accumulation of dust and dirt.

RV/Marine Off-Season Storage

When placing your coach or boat into seasonal storage, it is recommended that you perform the following to ensure the system is properly shut down (or properly configured for seasonal storage). This is especially important for maintaining the batteries.

- Perform the recommended maintenance steps noted above.
- Fully charge the batteries; if available, connect a battery charger to maintain the batteries.
- Verify the inverter is switched OFF.
- Switch OFF all unnecessary AC and DC loads.

Testing the GFCI Outlet

Use the steps below to periodically test the GFCI outlet to ensure it is operating properly.

1. Turn the inverter on.
2. Plug a small AC load (e.g., 40W light bulb) into the GFCI's outlet.
3. Check that the AC load is on (i.e., the bulb lights).
4. Press the GFCI's TEST button. The GFCI's RESET button should pop out, and the power should shut off (light bulb goes out).

   Note: *If the bulb remains lit or the RESET button does not pop out, the GFCI may not be functioning properly*.
5. Press the RESET button. The AC load should come back on (bulb lights again).

Appendix C - Regulatory and FCC Information

Regulatory Compliance

The CSW2012-X has been tested and listed to UL 458, 5th Edition (Power Converters/Inverters for use in the US; and is also certified to CSA C22.2 No. 107.1-01 (General Use Power Supplies) for use in Canada. It has been tested and certified to these product safety standards by Intertek Testing Services (known as ETL), which is a Nationally Recognized Testing Laboratory (NRTL). NRTL's are qualified organizations that meet Occupational Safety and Health Administration (OSHA) regulations to perform independent safety testing and product certification.

FCC Information

The CSW2012-X inverter has been tested and found to comply with the limits for a Class B digital device, pursuant to part 15 of the FCC Rules. These limits are designed to provide reasonable protection against harmful interference in a residential installation. This equipment generates uses and can radiate radio frequency energy and, if not installed and used in accordance with the instructions, may cause harmful interference to radio communications. However, there is no guarantee that interference will not occur in a particular installation. If this equipment does cause harmful interference to radio or television reception, which can be determined by turning the equipment off and on, the user is encouraged to try to correct the interference by one or more of the following measures:

- Re-orient or relocate the receiving antenna.
- Increase the separation between the equipment and the receiver.
- Connect the equipment into an outlet on a circuit different from that to which the receiver is connected.
- Consult the dealer or an experienced radio/TV technician for help.

Appendix D - About the PS5 and PS6 Settings

General Explanation

The “PS5” and “PS6” settings were introduced several years ago but have not yet been included in the printed owner’s manual. These settings govern the **Manual Backup** feature.

When enabled, Manual Backup prevents the unit from automatically switching to Inverter (battery) mode during an AC power outage or disconnection. Instead, the user must manually initiate battery backup by pressing the Power button. This feature is ideal for users leaving a site—such as a boat, RV, or cabin—for medium or extended periods. It ensures that non-critical AC loads do not deplete the batteries during an unexpected blackout in their absence. Previously, users had to manually toggle the “PS” parameter to “PS0” every time they left, which was often tedious.

Additionally, as per all the other “PS” settings, with PS5 and PS6, the transfer switch remains active in Bypass mode, ensuring AC input power continues to reach the output ports whenever available.

Manual Backup - PS5 Setting

Manual Backup function to prevent the unit from automatically switching to Inverter (Battery) mode during a power failure. Instead, Inverter mode must be engaged manually via the Power button, eliminating the need to navigate the settings menu to toggle the PS0 setting.

If an AC-Input power outage occurs, the inverter will remain off. To manually activate Inverter mode, use the Power button as follows:

- If the display is Off (blank): Press the Power button once.
- If the display still shows battery voltage: Press the Power button twice (the first press turns the unit completely off; the second turns it on in Inverter mode).

When AC-Input power is restored, the Bypass (Pass-thru) mode with its corresponding transfer switch relay is activated, with:

- 20-second delay: If the unit was already running in Inverter mode.
- Short delay: If the unit was turned off.

During the 20-second delay (validating period), the Status light will flash amber, indicating the system is preparing to switch to Bypass mode. Once Bypass mode is active, the Status light will turn solid green.

If the AC-Input power is disconnected or a blackout occurs while in Bypass mode:

1. The AC-Output ports shut down immediately.
2. The display remains on, showing the battery voltage for 30 seconds before powering off completely. --> To power off the display immediately, you may manually press the Power button before the 30-second timeout.

Manual Backup - PS6 Setting

Manual Backup function: It is controlled by the Power button. Pressing it once at any time—whether in Bypass or Inverter mode—toggles the display and the inverter stage:

- Display ON: The Inverter stage is **enabled**.
- Display OFF: The Inverter stage is **disabled**.

In Bypass (Pass-thru) mode, the AC-Output ports always remain active regardless of whether the display is On or Off. If the display is Off while in Bypass, the solid green Status light is the only indicator that the unit is working in that operating mode.

When AC-Input power is restored, the timing of the Bypass (Pass-thru) mode and its corresponding transfer switch activation depends on the Manual Backup status:

- If the Inverter (so its display) was OFF: The unit enters Bypass mode after a short delay.
- If the Inverter (so its display) was ON: There is a 20-second delay (verification period) before switching to Bypass. During this 20-second window, the Status light flashes amber, and the AC-Output continues to be powered in Inverter (Battery) mode. Once the timeout expires, the transfer switch activates, the unit enters Bypass mode, and the Status light turns solid green.

The system features a memory-save function. The last selected Manual Backup state (and the corresponding display On/Off status) is automatically saved. The unit will return to this specific state following any subsequent AC power outages or recoveries.

Note: Consistent with all other "PS" settings, the unit cannot be fully powered down via the Power button while in Bypass mode (as AC output through the transfer switch must always be prioritized when in-range AC Input power is available). To turn the unit off using the Power button, you must: 1) Disconnect the external AC-Input power (this forces the unit into Inverter mode); then 2) Press the Power button once the unit has passed to Inverter (Batter) mode.

The unit is designed to turn on automatically whenever AC-Input power is detected, even if it was previously off, except under the "PS4" setting, which may remain in a "memorized Off" condition even when AC power is connected. For more details, refer to the PS4 explanation in the owner's manual settings table.

Choosing Between PS5 and PS6 Settings

- **PS5 (Permanent Manual Backup)**: Use this setting if you always want the Manual Backup function unconditionally enabled, and keep the display visible with the regular messages, when the unit is working.

- **PS6 (Flexible/Visual Toggle)**: Use this setting if you want to easily enable or disable the Manual Backup function "on the fly", rather than being permanently active, and verify its status from a distance.

☐ Display OFF: Indicates Manual Backup is Enabled (the Status light will consistently remain solid green if in Bypass mode).

☐ Display ON: Indicates Manual Backup is Disabled.

☐ Quick Toggle: If the function is enabled (display off), you can press the Power button once to check the display messages, then press it again to return the unit to the "Manual Backup Enabled" state.

The following is a very brief description of the Manual Backup:

When active, the unit is prevented from automatically switching to Inverter (Battery) mode during an AC power failure or disconnection. Instead, battery power must be engaged manually by pressing the Power button, eliminating the need to navigate the settings menu to toggle "PS0."

Choose between the following two options:

- PS5 (Permanent Manual Backup): Manual Backup is always enabled. The unit will never switch to battery power automatically. When operating (supplying AC power), the display always shows normal system messages.
- PS6 (Toggleable Manual Backup): This allows you to enable or disable the Manual Backup function on the run, simply by pressing the Power button. This mode is easily identifiable from a distance:

o Display Blank: Manual Backup is Enabled (Automatic inversion is OFF).

o Display Active: Manual Backup is Disabled (Normal automatic backup operation).

Please note the other possible names for the Manual Backup conditions:

- **Manual Backup enabled = Automatic Backup disabled --> In short: Manual Backup or "MBU"**
- **Manual Backup disabled = Automatic Backup enabled --> In short: Automatic Backup or "ABU"**

More details regarding the PS6 setting

With the "Manual Backup" function enabled, the unit does not automatically pass to Inverter (Backup) mode, neither when the shore power is disconnected nor when it is connected from a shutdown condition. To work in Inverter (Battery) mode, the Power button has to be pressed.

Determining Manual Backup Status (PS6 Setting)

In the PS6 setting, you can identify whether the Manual Backup function is enabled or disabled based on the unit's visual indicators and current power source

More details regarding the PS6 setting

With the "Manual Backup" function enabled, the unit does not automatically pass to Inverter (Backup) mode, neither when the shore power is disconnected nor when it is connected from a shutdown condition. To work in Inverter (Battery) mode, the Power button has to be pressed.

A) While in Bypass Mode (Shore Power Connected)

You can toggle between these two states simply by pressing the Power button.

- **Manual Backup Enabled**:

o The Display and Display LED turn off.

o The Status LED remains solid green. This is the only visual indicator that the unit is active and in Bypass mode.

- **Manual Backup Disabled**:

o The Display is active and shows the DC voltage (or your selected parameter).

o The Status LED is solid green, and the Display LED functions normally.

B) While Not in Bypass Mode (No Shore Power)

The status is determined by how the unit was behaving before shore power was connected or restored.

- **Manual Backup Enabled**: The unit is in this state if it was completely shut down (either manually turned off or due to a depleted battery) and then automatically starts in Bypass mode once shore power is applied.

- **Manual Backup Disabled**: The unit is in this state if it is already running in Inverter (Battery) mode when shore power is connected. Upon sensing the power, the unit will transition to Bypass mode while keeping the Inverter stage ready for the next outage.

DMX Power

www.DMX-Power.com

64-0074 D Owner’s Manual, CSW2012-X