CSW Series (12-volt models)

Pure Sine Wave Inverter

Owner's Manual

Disclaimer of Liability

Since the use of this manual and the conditions or methods of installation, operation, use and maintenance of the CSW Series inverter is beyond the control of DMX Power, this company does not assume responsibility and expressly disclaims liability for loss, damage or expense, whether direct, indirect, consequential or incidental, arising out of or in any way connected with such installation, operation, use, or maintenance.

Note as well that while every precaution has been taken to ensure the accuracy of the contents of this manual, the specifications and product functionality may change without notice. DMX Power assumes no responsibility for errors or omissions.

Restrictions on Use

The CSW Series inverter may only be used in life support devices and systems with the express written approval of DMX Power. Failure of this inverter can reasonably be expected to cause failure of that life support device or system, or to affect the safety or effectiveness of that device or system. If the CSW Series inverter fails, it is reasonable to assume the health of the user or other persons may be endangered.

Copyright Notice

Copyright © 2026 by DMX Power LLC. All rights reserved. Permission to copy, distribute, and/or modify this document is prohibited without express written permission from DMX Power.

Document Information

Description – CSW 12V Series Owner's Manual

Part Number and Revision – 64-0063 Rev J

Date Published – March 2026

The entire manual is available for download—with many of the diagrams available in color—from our website at: www.dmx-power.com

Contact Information

DMX Power
Phone: 800-553-6418 or 651-653-7000
Technical Questions: support@dmx-power.com
Warranty or RMA: warranty@dmx-power.com
Web: www.dmx-power.com

Statement of Appreciation

Thank you from all of us at DMX Power for purchasing this CSW Series inverter. At DMX Power, we are committed to providing you with quality products and services, and hope that your experience with us is pleasant and professional.

Record the unit's model and serial number in case you need to provide this information in the future. It is much easier to record this information now, instead of trying to gather it after the unit has been installed.

Model:	Serial Number:
CSW412	BE
CSW1012	AU or CG
CSW2012	BD

IMPORTANT PRODUCT SAFETY INSTRUCTIONS

This manual contains safety instructions that must be followed during the installation and operation of this product. Read all instructions and safety information on the inverter and in this manual before installing or using.

Safety Symbols

To reduce the risk of electrical shock, fire, or other safety hazard, the following safety symbols have been placed throughout this manual to indicate dangerous situations and important safety instructions.

WARNING: Indicates that failure to take a specified action could result in physical harm to the user.

CAUTION: Indicates that failure to take a specified action could result in damage to the equipment.

Info: Indicates information that emphasizes or supplements important points of the main text.

Product Safety Warnings

WARNINGS: Failure to follow the instructions below and in this manual can result in death or serious injury.

- All electrical work must be performed in accordance with local, state and federal electric codes.
- This product is designed for indoor use only. Do not expose to rain, snow, moisture, or liquids of any type.
- Use insulated tools to reduce the chance of electrical shock or accidental short circuits. Remove all jewelry such as rings, watches, bracelets, etc., when installing or performing maintenance on the inverter.
- Always disconnect the batteries or energy source prior to installing or performing maintenance on the inverter. Live power may be present at more than one point since an inverter utilizes both batteries and AC.
- Do not cover or obstruct any air vent openings and/or install in a zero-clearance compartment. Always operate the unit in an open area.
- When working with electrical equipment or lead acid batteries, have someone nearby in case of an emergency.
- Study and follow all the battery manufacturer's specific precautions when installing, using, and servicing the battery connected to the inverter.
- When working with batteries wear eye protection and gloves, and avoid touching your eyes. Have fresh water and soap nearby in case battery acid comes in contact with eyes. If this occurs, cleanse right away with soap and water for a minimum of 15 minutes and seek medical attention.
- Batteries produce explosive gases, DO NOT smoke or have an open spark or fire near the system.
- Avoid dropping any metal tool or object on the battery. Doing so could create a spark or short circuit which goes through the battery or another electrical tool and may cause an explosion.
- Explosion hazard! DO NOT use this inverter in the vicinity of flammable fumes or gases (such as propane tanks or large engines).
- These inverters contain no user-serviceable parts. See the Warranty section for how to handle service issues.

Table of Contents

1.0 Introduction 1
1.1 Front/Back Features – CSW1012 and CSW2012 1
1.2 Front/Back Features – CSW412 3
1.3 Regulatory Compliance 4
2.0 Installation 5
2.1 Pre-Installation 5
2.1.1 Installation Guidelines 5
2.1.2 Unpacking and Inspection 5
2.1.3 Tools Required 5
2.2 Locating and Mounting the Inverter 8
2.3 Wiring the Inverter – General Requirements 11
2.3.1 Wiring Requirements 11
2.3.2 Torque Requirements 11
2.4 DC Wiring 12
2.4.1 DC Wire Sizing 13
2.4.2 DC Overcurrent Protection 14
2.4.3 DC Grounding 14
2.4.4 DC Cable Connections 14
2.4.5 Wiring the Battery Bank 15
2.4.6 Wiring the Inverter to the Battery Bank 15
2.4.7 Appliances and Run Time 17
2.5 Testing the Inverter 18
2.5.1 Inverter Functional Test 18
2.5.2 GFCI Function Test 18
3.0 Operation 19
3.1 CSW412 Operation 19
3.2 CSW1012 and CSW2012 Operation 19
3.3 Understanding Loads 20
3.4 System Maintenance 21
4.0 Troubleshooting 22
5.0 Specifications 23

List of Figures

Figure 1-1, Front Panel Features (CSW1012 and CSW2012) 1
Figure 1-2, Back Panel Features (CSW1012) 2
Figure 1-3, Back Panel Features (CSW2012) 2
Figure 1-4, Front Panel Features (CSW412) 3
Figure 1-5, Back Panel Features (CSW412) 4
Figure 2-1, Basic System Diagram 6
Figure 2-2, RV OEM System Diagram 7
Figure 2-3, Mounting Positions 9
Figure 2-4, CSW412 Dimensions..... 9
Figure 2-5, CSW1012 Dimensions..... 10
Figure 2-6, CSW2012 Dimensions..... 10
Figure 2-7, DC Cable to Battery Terminals 16
Figure 2-8, DC Cable to Inverter's DC Terminals 17

List of Tables

Table 2-1, DC Terminal – Torque Requirements..... 11
Table 2-2, DC Wire/Overcurrent Device for Rated Use 13
Table 2-3, Appliance Power Consumption and Run Time..... 17
Table 3-1, Examples of Digital Display Readings 20
Table 4-1, Troubleshooting Guide 22
Table 4-2, CSW1012 and CSW2012 Inverter Error Codes..... 22
Table 5-1, CSW Series Specifications..... 23

1.0 Introduction

Congratulations on your purchase of the CSW Series pure sine wave inverter. The CSW Series includes the CSW412, CSW1012 and CSW2012 inverters from DMX Power. The CSW Series inverters are "pure" sine wave inverters designed to be powerful, yet simple to operate, and will provide you with reliable AC power for trouble-free use. Please read the Introduction section to familiarize yourself with the features and benefits of your CSW Series inverter.

1.1 Front/Back Features – CSW1012 and CSW2012

The front panels of the CSW1012 and CSW2012 inverters are similar and are equipped with the following features (see Figure 1-1):

1. **Serial Number** – the unique identification number assigned to each unit (with a model-specific prefix).
   Note: *Enter your inverter's serial number in the table on page i. It is to easier to record this information now, instead of trying to gather it after the unit has been installed.*
2. **GFCI** – a Ground Fault Circuit Interrupter protected AC outlet. The GFCI outlet quickly stops the flow of electricity in the event a ground fault occurs on the device that is plugged into the inverter.
3. **Status Indicator** – an at-a-glance LED that provides the inverter's status—lights green, red, or amber (see Section 3.0 Operation).
4. **Digital Display** – a three-character alphanumeric display that shows the inverter's measured battery voltage, total AC output power, and any error or warning codes.
5. **Power/Select Button** – a momentary button switch that allows the inverter to be quickly turned on or off.
6. **Remote Port** – a RJ12 connector that allows an optional remote switch to be connected via a remote cable.
   Note: *Remote switch is sold separately (PN: CSW-RS).*
7. **USB Port** – allows USB-enabled devices to be powered and charged.

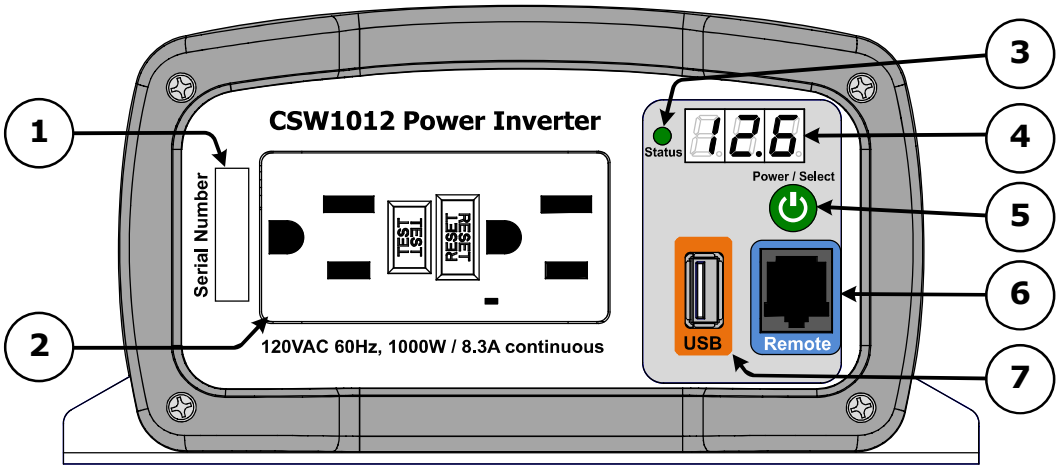

Figure 1-1, Front Panel Features (CSW1012 and CSW2012)

The back panels of the CSW1012 and CSW2012 inverters are equipped with the following features (See Figure 1-2 and Figure 1-3, respectively):

8. **Cooling Fan(s)** – an intake cooling fan(s) that automatically turns on when the inverter's internal temperature rises above a safe level, and turns off when the inverter's internal temperature falls to a safe level.
9. **Mounting Flanges (front and rear)** – used to mount and secure the inverter to a shelf/wall.
10. **DC Negative Terminal (black)** – the inverter's connection to the negative terminal on the 12 VDC battery bank.
11. **DC Positive Terminal (red)** – the inverter's connection to the positive terminal on the 12 VDC battery bank.
12. **Model Number** – the model number of the inverter (i.e., CSW1012), and other information.
13. **DC Chassis Ground Connection** – the connection that is used to tie the exposed chassis of the inverter to the DC grounding system. The DC grounding system could be the vehicle's chassis, the DC grounding bus, or to the engine's negative bus.

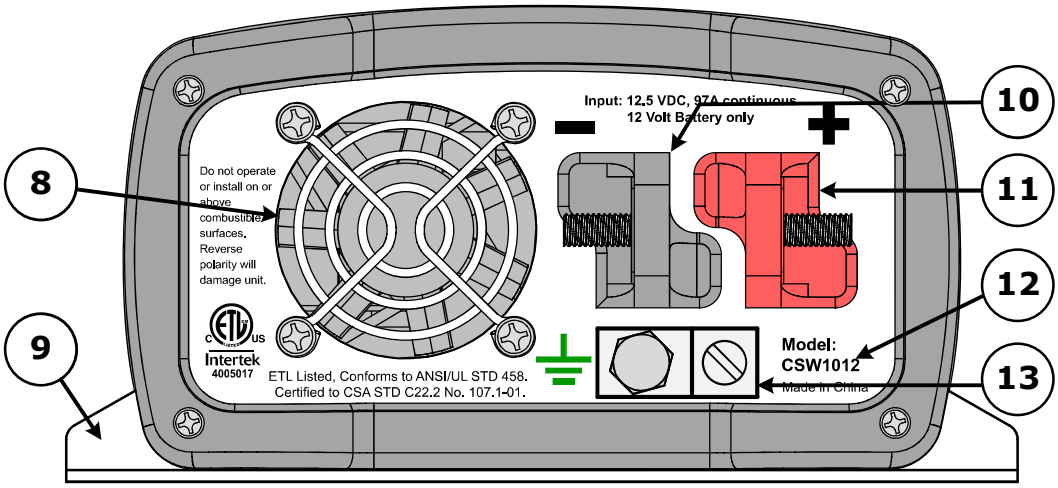

Figure 1-2, Back Panel Features (CSW1012)

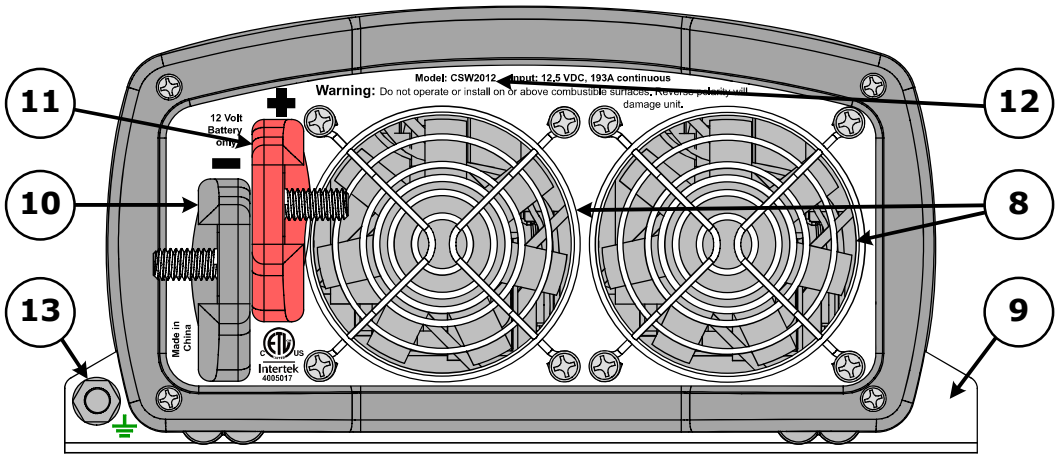

Figure 1-3, Back Panel Features (CSW2012)

1.2 Front/Back Features – CSW412

The CSW412 is equipped with the following front panel features (Figure 1-4):

1. **Power Indicator** – an at-a-glance LED that lights green when the inverter is on. (see Section 3.0 Operation).
2. **Fault Indicator** – an at-a-glance LED that comes on to indicate an inverter fault (see Section 4.0 Troubleshooting).
3. **USB Port** – allows USB-enabled devices to be powered and charged.
4. **ON/OFF Power Switch** – a 2-position switch that turns the inverter on and off.
5. **Serial Number** – the unique identification number assigned to each unit (with a model-specific prefix).
   Note: *Enter the inverter's serial number in the table on page i. It is to easier to record this information now, instead of trying to gather it after the unit has been installed.*
6. **GFCI** – a Ground Fault Circuit Interrupter protected AC outlet. The GFCI outlet quickly stops the flow of electricity in the event a ground fault occurs on the device that is plugged into the inverter.

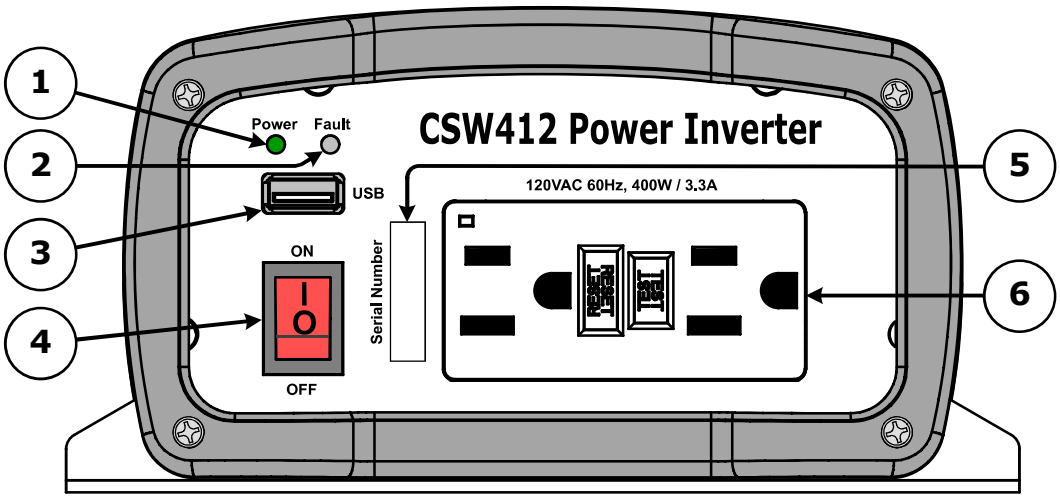

Figure 1-4, Front Panel Features (CSW412)

The back panel of the CSW412 inverter is equipped with the following features (see Figure 1-5):

7. **Cooling Fan** – an intake cooling fan that automatically turns on when the inverter's internal temperature is >122°F (50°C). The fan turns off when the inverter's internal temperature falls below 122°F (50°C).
8. **DC Negative Terminal (black)** – the inverter's connection to the negative terminal on the 12 VDC battery bank.
9. **Mounting Flanges (front and rear)** – used to mount and secure the inverter to a shelf/wall.
10. **Model Number** – the model number of the inverter (i.e., CSW412), and regulatory compliance information.
11. **DC Positive Terminal (red)** – the inverter's connection to the positive terminal on the 12 VDC battery bank.

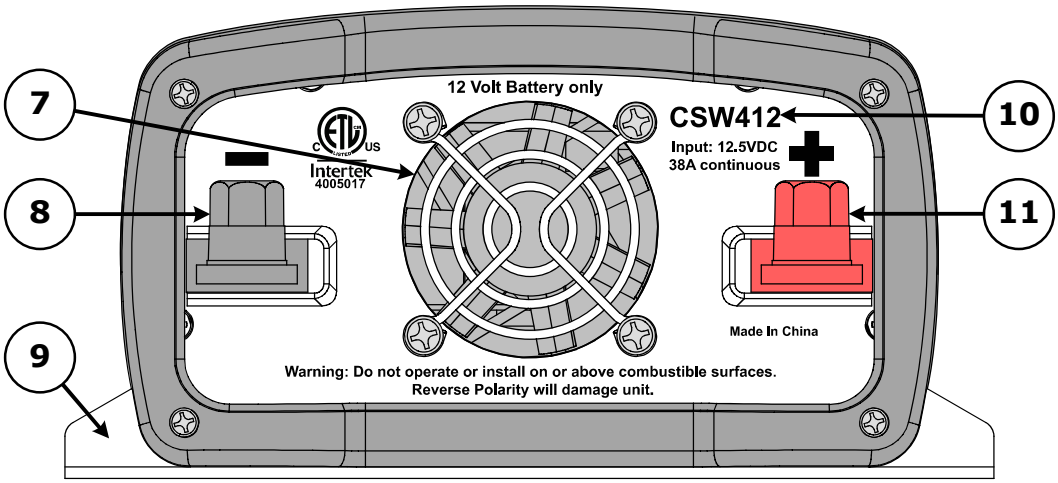

Figure 1-5, Back Panel Features (CSW412)

1.3 Regulatory Compliance

The CSW Series inverters are intended to be used for land vehicles (RVs or trucks) or marine craft. They are listed to UL Standard 458, 5th Edition (Power Converters/Inverters and Power Converter/Inverter Systems for Land Vehicles and Marine Crafts) for use in the US; and are also certified to CSA Standard C22.2 No. 107.1-01 (General Use Power Supplies) for use in Canada.

These inverters have been tested and certified to product safety standards by Intertek Testing Services (known as ETL), which is a Nationally Recognized Testing Laboratory (NRTL). NRTLs are qualified organizations that meet Occupational Safety and Health Administration (OSHA) regulations to perform independent safety testing and product certification.

2.0 Installation

Review this section and all safety instructions before proceeding with the installation of your inverter.

WARNING: Installations should be performed by qualified personnel, such as a licensed or certified electrician. The installer determines which safety codes apply and ensures all applicable installation requirements are followed. Applicable installation codes vary depending on the specific location and application.

WARNING: Before installing, review the "Important Product Safety Information" on page ii and adhere to all cautionary markings located on the inverter and on the batteries.

2.1 Pre-Installation

Before proceeding, read the entire Installation section to determine how best to install your CSW Series inverter. The more thorough you plan in the beginning, the better your inverter needs will be met. Depending on your application, there are simplified system diagrams shown in Figure 2-1 and Figure 2-2. These should be reviewed to assist you in planning and designing your installation. These drawings are not intended to override or to restrict any national or local electrical codes, and should not be the determining factor as to whether the installation is compliant, that is the responsibility of the electrician and the onsite inspector.

2.1.1 Installation Guidelines

- Before connecting any wires, determine the cable routes throughout the vehicle or boat, both to and from the inverter.
- Always check for existing electrical, plumbing, or other areas of potential damage BEFORE drilling or cutting into walls.
- Ensure all wires have a smooth bend radius and do not become kinked.
- If installing this inverter in a boat, RV or truck, ensure the conductors passing through walls, bulkheads, or other structural members are protected. This minimizes insulation damage (such as chafing), which can be caused by vibration or constant rubbing.

2.1.2 Unpacking and Inspection

Carefully remove the inverter from its shipping container and inspect all contents. Verify the following items are included:

- CSW Series inverter
- CSW Series (12-volt models) Owner's Manual

If items appear to be missing or damaged, contact your authorized DMX Power dealer or DMX Power directly.

****** Save your proof-of-purchase as a record of your ownership; it is needed if the unit should require in-warranty service. ******

2.1.3 Tools Required

Installing the inverter is simple and requires the following:

- Adjustable wrench (10-13 mm)
- #10 Mounting screws (x4)
- Phillips screwdriver
- Level
- Pencil
- Drill
- Drill bits

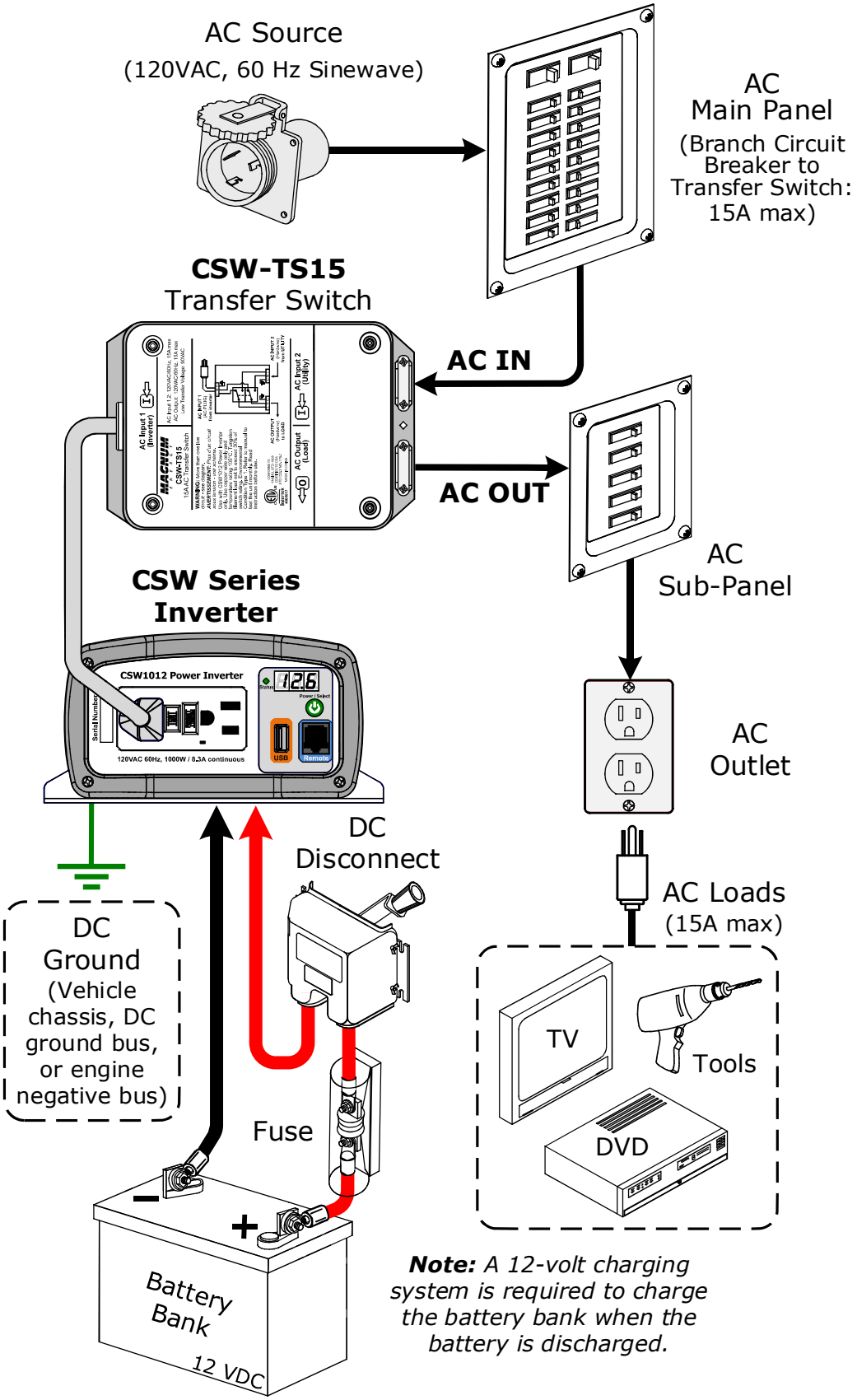

Figure 2-1, Basic System Diagram

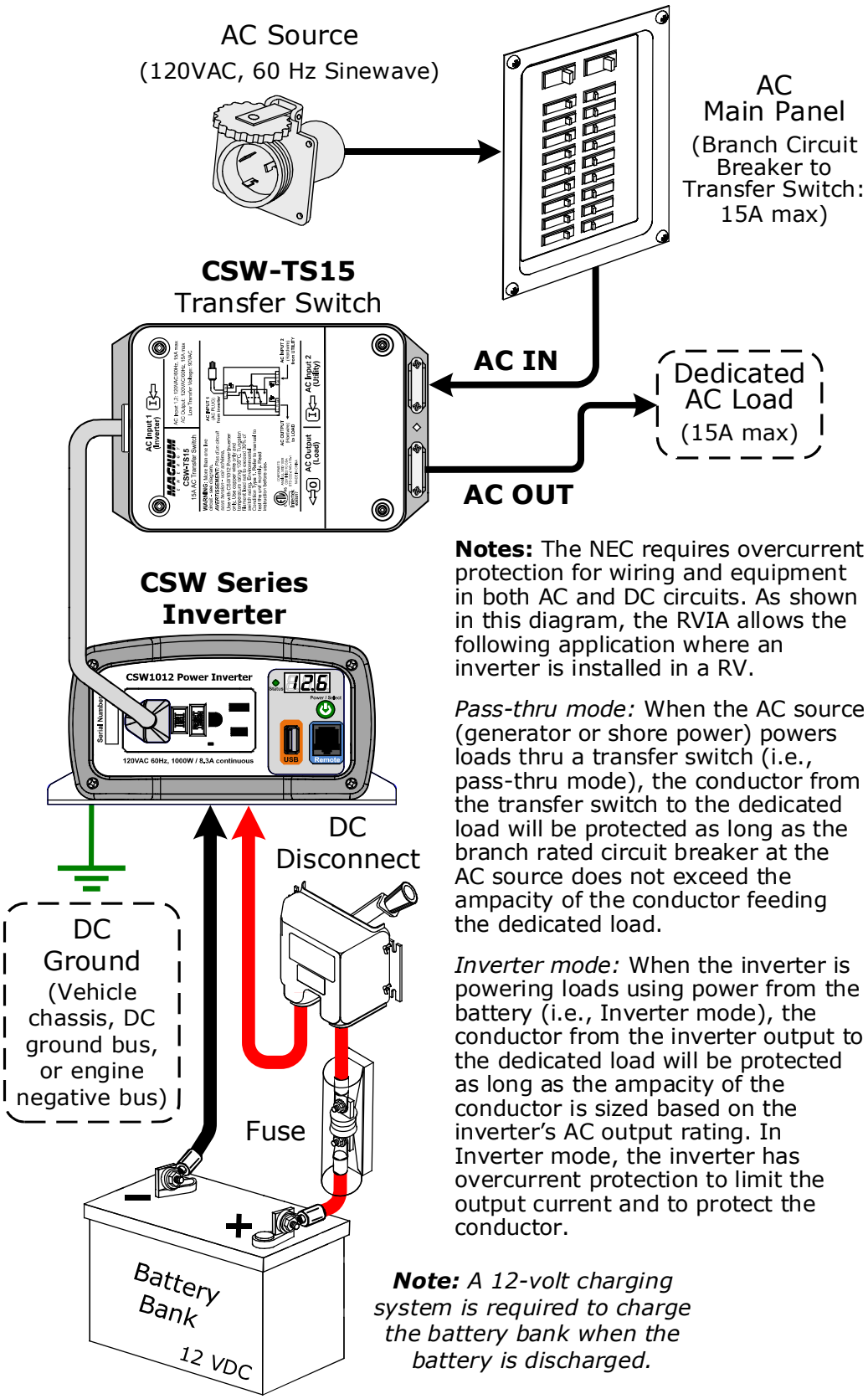

Notes: The NEC requires overcurrent protection for wiring and equipment in both AC and DC circuits. As shown in this diagram, the RVIA allows the following application where an inverter is installed in a RV.

Pass-thru mode: When the AC source (generator or shore power) powers loads thru a transfer switch (i.e., pass-thru mode), the conductor from the transfer switch to the dedicated load will be protected as long as the branch rated circuit breaker at the AC source does not exceed the ampacity of the conductor feeding the dedicated load.

Inverter mode: When the inverter is powering loads using power from the battery (i.e., Inverter mode), the conductor from the inverter output to the dedicated load will be protected as long as the ampacity of the conductor is sized based on the inverter's AC output rating. In Inverter mode, the inverter has overcurrent protection to limit the output current and to protect the conductor.

Note: *A 12-volt charging system is required to charge the battery bank when the battery is discharged.*

Figure 2-2, RV OEM System Diagram

2.2 Locating and Mounting the Inverter

DANGER: Explosion hazard!
• Do not use the unit in the vicinity of flammable fumes or gases (such as propane tanks or large engines).
• Avoid covering the ventilation openings. Always operate unit in an open area.
• Prolonged contact to high heat or freezing temperatures will decrease the working life of the unit.
• Do not connect AC power source like utility power or generator to the AC outputs of the unit. It will damage the unit and may cause fire; and is not covered by warranty.

Install and mount in a location that meets the following requirements:

Clean and dry – The inverter is rated "For indoor use only". It should not be installed in an area that allows dust, fumes, insects, or rodents to enter or block the inverter's ventilation openings. This area also must be free from any risk of condensation, water, or any other liquid that can enter or fall on the inverter. Inverter failure under these conditions is not covered under warranty.

Cool – The inverter should be protected from direct exposure to the sun or to any equipment that produces extreme heat. The ambient temperature should be between 32°F (0°C) and 104°F (40°C); note that the inverter's output specifications are rated at 77°F (25°C), so the cooler the better.

Ventilated – In order for the inverter to provide full output power and avoid over-temperature fault conditions, do not cover or block the inverter's ventilation openings, or install this inverter in an area with limited airflow. Allow a minimum airspace clearance of 3" (7.6 cm) around the unit to provide optimum ventilation.

Safe – Do not mount the inverter near any flammable or combustible fluid or components, or in locations that require ignition-protected devices.

Close to the battery bank – As with any inverter, it should be located as close to the batteries as possible. Long DC wires tend to lose efficiency and reduce the overall performance of an inverter. However, the unit should not be installed in the same compartment as the batteries or mounted where it will be exposed to gases produced by the batteries. These gases are corrosive and will damage the inverter; also, if these gases are not ventilated and if allowed to collect, they could ignite and cause an explosion.

Accessible – Do not block access to the front or back of the inverter. Allow room to view any indictors or digital display and to access the AC and DC wiring connections—they will need to be checked and tightened periodically.

Orienting the inverter – This inverter has no restriction on the direction on which it can be mounted. It can be mounted on/underneath a horizontal surface (shelf or table), on a vertical surface (wall or bulkhead) with the DC terminals facing left or right, or towards the top or bottom (see Figure 2-3).

Use the base of the inverter's chassis as a template to mark your mounting screw locations (or, refer to the dimensions in Figures 2-4 thru 2-6). If this unit is used in a mobile application, you may want to place flexible washers or bushings between the mounting surface and the inverter's mounting flanges to reduce vibration.

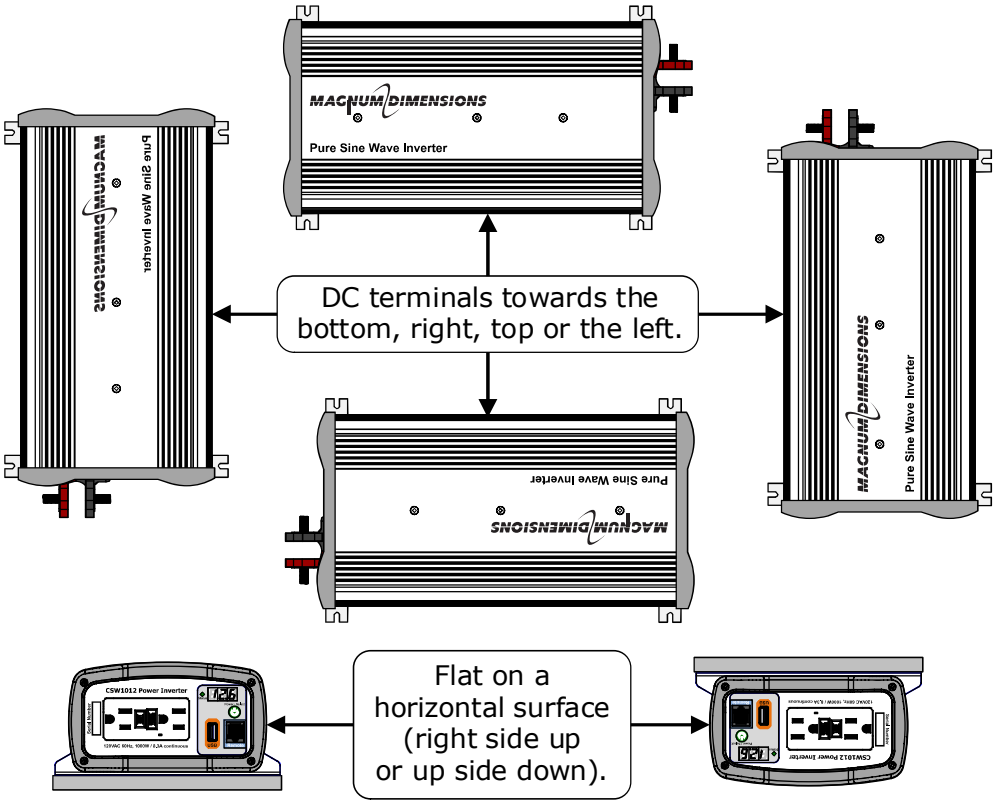

Figure 2-3, Mounting Positions

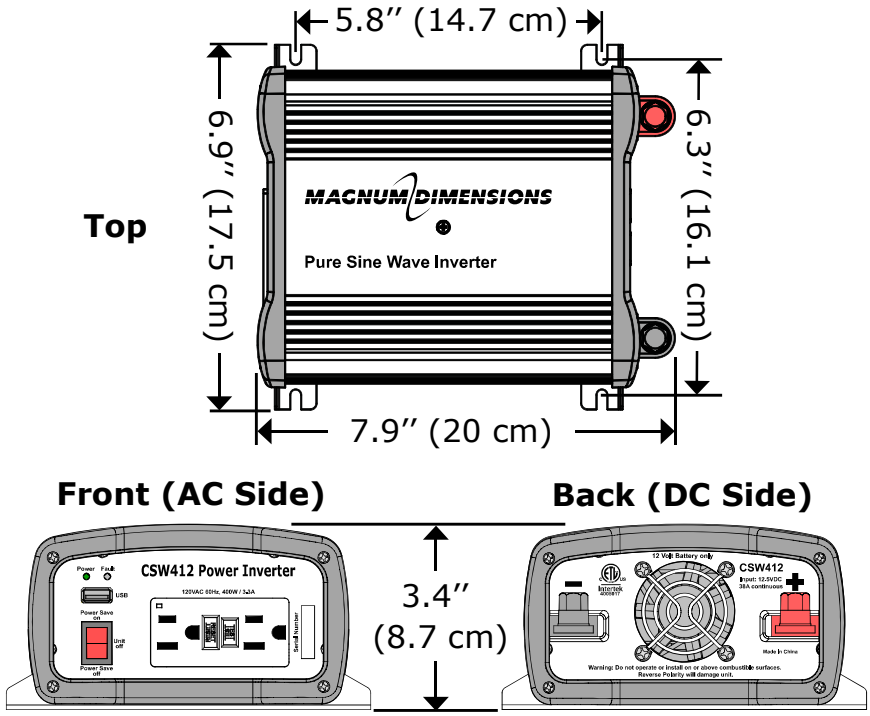

Figure 2-4, CSW412 Dimensions

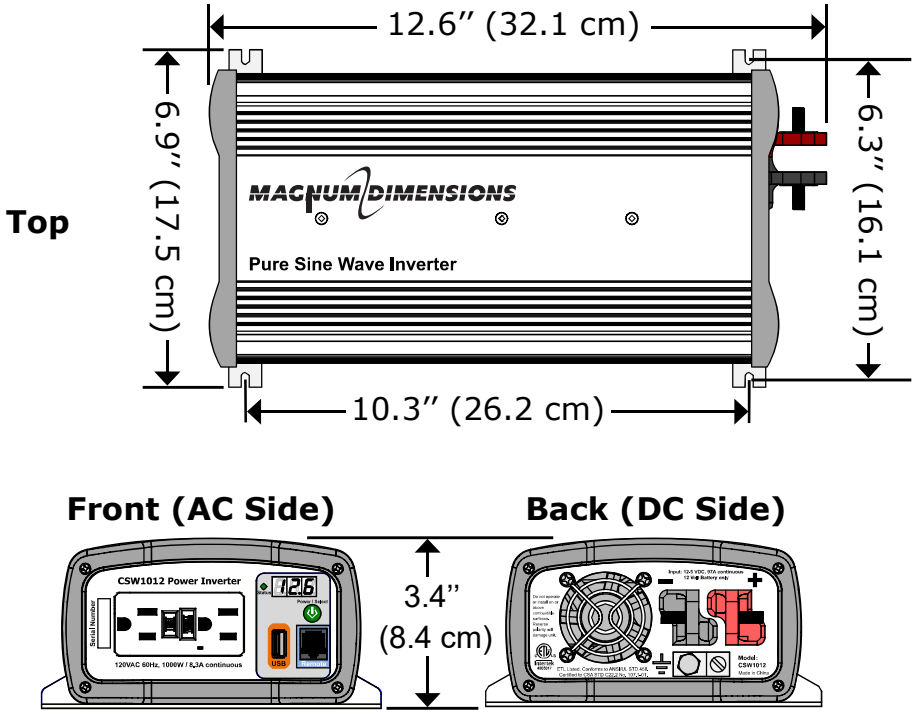

Figure 2-5, CSW1012 Dimensions

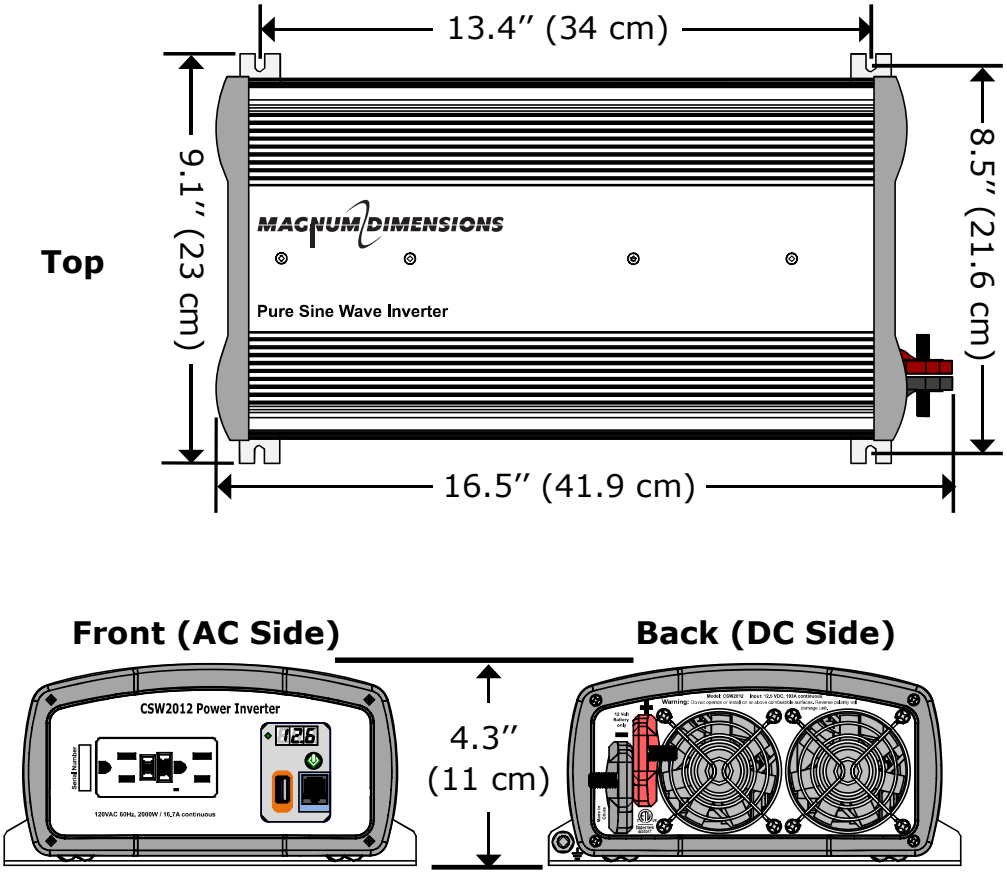

Figure 2-6, CSW2012 Dimensions

2.3 Wiring the Inverter – General Requirements

This section describes the requirements and recommendations for wiring the CSW Series inverter. Before wiring the inverter, carefully read all instructions.

WARNING: Wiring should meet all local codes/standards and be performed by qualified personnel (i.e., licensed electrician).

2.3.1 Wiring Requirements

- All conductors that are at risk for physical damage must be protected by tape or placed in a raceway.
- Always check for existing electrical, plumbing, or other areas of potential damage prior to making cuts in structural surfaces or walls.
- Where DC wiring must cross AC or vice-versa, try to make the wires at the crossing point perpendicular (90 degrees) to one another.
- DC overcurrent protection must be provided as part of the installation.
- Use only copper wires with a minimum temp rating of 167°F (75°C).
- Ensure all conductor insulation is of a type that is approved for the voltage, operation, temperature and location of use.

2.3.2 Torque Requirements

All wiring to the DC terminals and DC ground connection should be checked periodically (once a month) for proper tightness. For the torque requirements, refer to Table 2-1. If you don't have a torque wrench, ensure all connections are tight.

Table 2-1, DC Terminal – Torque Requirements

Inverter Model	DC Terminals	Torque Requirements	Torque Wrench Size Needed
CSW412	Hex Cap screws	52 to 58 lbf-in (5.9 to 6.5 N-m)	12 mm wrench
CSW1012	M6 x 1.0 Hex nuts	79 to 96 lbf-in (8.9 to 10.9 N-m)	10 mm wrench
CSW2012	M8 x 1.25 Hex nuts	16 to 21 lbf-ft (22 to 28 N-m)	13 mm wrench

2.4 DC Wiring

This section describes the inverter's required DC wire sizes, the recommended disconnect/overcurrent protection, and how to make the DC connections to the inverter and the battery bank.

WARNING: Even though DC voltage can be regarded as "low voltage", significant hazards may be present, particularly from short circuits of the battery system.

CAUTION: The inverter is NOT reverse polarity protected—if the negative and positive battery voltage is connected to the inverter backwards, the inverter will likely be damaged. Use a voltmeter to verify the correct polarity BEFORE connecting the DC wires.

CAUTION: DO NOT connect the battery cables to the inverter until all wiring is complete and the correct DC voltage and polarity have been verified.

Refer to Figure 2-7 when connecting the DC wires to the battery, and to Figure 2-8 when connecting to the inverter. Also, consider the following requirements to ensure maximum performance:

The inverter's DC positive and negative cables from the battery bank should be tied together with wire ties/straps or electrical tape approximately every 6 inches (15.3 cm). This helps improve the surge capability and reduces the effects of inductance, which improves the inverter waveform and reduces the wear of the inverter's filter capacitors. Keeping the battery cables close together also reduces the chance of radio frequency interference.

Be aware that over-tightening or misthreading the nuts on the DC terminals can cause the bolts to strip and snap/break off.

Make sure cables have a smooth bend radius and do not become kinked. Follow existing wire runs where possible.

Crimped and sealed copper ring terminal lugs with at least a 6 mm (1/4") bolt hole to connect the DC wires to the inverter's DC terminals.

The battery bank voltage MUST be between 10.5 – 15.5 (10.5 – 15.75 for the CSW412) for the inverter to operate. If the voltage exceeds 16.0V, the inverter may be damaged.

To ensure the maximum performance from the inverter, all connections from the battery bank to the inverter should be minimized. The exceptions are the DC fuse and disconnect, or the DC circuit breaker—required at the battery to protect the DC wiring—in the positive line. Any other additional connection will contribute to additional voltage drops, and these extra connection points may loosen during use.

A brief spark or arc may occur when connecting the battery cables to the inverter DC terminals; this is normal and due to the inverter's internal capacitors being charged.

Before routing the wiring, color code the DC cables/wires with colored tape or heat shrink tubing: RED for positive (+); WHITE for negative (–); and GREEN (or bare copper) for DC ground, to avoid polarity problems.

A cable should be connected directly from the inverter negative terminal to the battery negative connection; this ensures the inverter has a reliable return path directly to the battery. Do not use the chassis in place of the battery negative connection to the inverter.

2.4.1 DC Wire Sizing

It is important to use the correct sized DC wire to achieve maximum efficiency from the system and to reduce fire hazards associated with overheating. Always keep your wire runs as short as practical to prevent low voltage shutdowns and to keep the DC breaker from nuisance tripping (or open fuses) because of increased current draw. See Table 2-2 to select the minimum DC wire size (and corresponding overcurrent device) required based on your inverter model. The cable sizes listed in this table are required in order to reduce stress on the inverter, minimize voltage drops, increase system efficiency, and ensure the inverter's ability to surge heavy loads.

If the distance from the inverter to the battery is >5 feet (1.5 m), the DC wire will need to be increased. Longer cable distances affect inverter performance. See Table 2-2 to determine the minimum DC wire size needed for various distances greater than 5 feet—based on your inverter model.

DC Wire Size Exception: In an OEM RV application, smaller DC wire (with appropriate overcurrent protection) may be used if the inverter will only be connected to a dedicated load (as shown in Figure 2-2), and the inverter and dedicated load have been thoroughly tested and sold together by the OEM as a complete system.

Table 2-2, DC Wire/Overcurrent Device for Rated Use

		CSW412	CSW1012	CSW2012
Full Load Current		38 amps	94 amps	187 amps
Maximum Continuous Current[1]		46 amps	113 amps	224 amps
Minimum DC Ground Wire Size[2]		#8 AWG (8.36 mm²)	#8 AWG (8.36 mm²)	#8 AWG (8.36 mm²)
Minimum DC Wire Size [75°C rating in free air][3]		#10 AWG (5.26 mm²) [50 amps]	#2 AWG (33.6 mm²) [170 amps]	#3/0 AWG (85 mm²) [310 amps]
Maximum DC Fuse Size		50 amps with time delay	150 amps with time delay	300 amps with time delay
Increased size for longer distance	**5 – 10 ft (1.5 – 3 m)**	#8 AWG (8.4 mm²)	#1 AWG (42.4 mm²)	#4/0 AWG (107 mm²)
	10 – 15 ft (3 – 4.6 m)	#6 AWG (13.3 mm²)	#1/0 AWG (53.5 mm²)	Not recommended

Note[1]: *Maximum Continuous Current is based on the inverter's continuous power rating at the lowest input voltage with an efficiency factor.*

Note[2]: *The grounding conductor for the DC system shall meet the sizing requirements specified in the NEC for the application, but must be no smaller than 8 AWG (8.4 mm²) copper. In some applications, the DC grounding conductor is required to be no less than the wire size for the DC positive/negative cables.*

Note[3]: *Copper wire rated with 167°F (75°C) insulation at an ambient temperature of 86°F (30°C), with a multiple cable fill factor (0.8) derating (if needed).*

2.4.2 DC Overcurrent Protection

For safety reasons and to comply with electrical code regulations, DC overcurrent protection must be provided as part of the installation. The DC overcurrent protection device must be installed in the positive DC cable line, it can be a fuse (with a disconnect switch) or a circuit breaker and must be DC-rated. It must be correctly sized according to the size of DC cables being used, which means it is required to open before the cable reaches its maximum current carrying capability, thereby preventing a fire. The NEC requires both overcurrent protection and a disconnect switch.

Because batteries can deliver thousands of amps in an instant during a short, you are required to install a DC-rated fuse (or circuit breaker) that has a interrupt current rating (known as Amps Interrupting Current or AIC) that can withstand the short-circuit current without explosion or damage. If a fuse is used as an overcurrent device, a Class-T type or equivalent is highly recommended when used with inverters. A Class-T fuse is rated for DC operation, can handle very high short-circuit currents (up to 100,000 amps), and has a time delay that allows for momentary current surges from the inverter without opening the fuse. In some installations, if the combined short-circuit current of all the batteries in the bank is determined to be 2,700 amps or less, then an ANL type of fuse may be used—if in doubt, use a Class-T fuse. See Table 2-2 for the fuse size (coordinated with the DC wire size) recommended for your CSW inverter.

2.4.3 DC Grounding

The inverter should always be connected to a permanent, grounded wiring system. The idea is to connect the metallic chassis of the various enclosures together to have them at the same voltage potential, to reduce the possibility for electric shock. For most installations, the inverter chassis and the negative battery conductor are connected to the system's ground bond via a safety grounding conductor (bare wire or green insulated wire) at only one point in the system. The grounding conductor for the DC system shall meet the sizing requirements specified in the NEC for the application, but must be no smaller than 8 AWG copper.

Example: *An inverter used in a marine application under ABYC guidelines requires the size of the DC grounding conductor to be of an ampacity equal to or one size less than that of the DC positive conductor.*

See Table 2-2 for the minimum ground wire size recommended for your inverter.

Info: If the inverter is installed in a vehicle, connect the battery negative cable directly to the inverter's negative terminal. DO NOT connect the negative battery cable meant for the inverter to the vehicle's frame/safety ground.

2.4.4 DC Cable Connections

Do not put anything between the battery cable ring lug and the battery post (see Figure 2-7), or the flat metal part of the inverter's DC terminal (see Figure 2-8). When connecting the battery cable, it should be placed directly against the battery post or inverter terminal. Incorrectly installed hardware causes a high resistance connection which could lead to poor inverter performance, and may melt the cable and terminal connections. See Table 2-1 for the torque requirements.

Info: The DC terminal/Hex nuts on the CSW1012 and CSW2012 are made of stainless steel, which has a high likelihood of galling or thread seizing while being tightened—causing the bolts to strip or to snap/break off. Use an anti-seize lubricant, tighten the fasteners slowly (@low rpms) without interruption, and apply only light pressure.

2.4.5 Wiring the Battery Bank

WARNING: Lethal currents will be present if the positive and negative cables attached to the battery bank touch each other. During the installation and wiring process, ensure the cable ends are insulated or covered to prevent touching/shorting the cables.

Info: DO NOT connect the DC wires from the battery bank to the inverter until 1) all DC wiring is complete, 2) the correct DC overcurrent protection has been installed, and 3) the correct DC voltage and polarity have been verified.

Depending upon the voltage of the batteries (6 or 12 VDC), the batteries must be wired in series, parallel, or series-parallel to provide the correct voltage. The interconnecting DC wires must be sized and rated exactly the same as those used between the battery bank and the inverter.

Place the batteries as close as practical to the inverter, preferably in an insulated and ventilated enclosure. Allow adequate space above the batteries to access the terminals and vent caps (as applicable). Also, allow at least 1” (2.5 cm) of space between the batteries to provide good air flow. DO NOT mount the batteries directly under the inverter.

CAUTION: Install batteries in a well ventilated area. Batteries can produce explosive gasses. For compartment or enclosure installations, always vent batteries to the outside.

Info: To ensure the best performance from your inverter system, batteries should be of the same size, type, rating, and age. Do not use old or untested batteries.

2.4.6 Wiring the Inverter to the Battery Bank

CAUTION: The inverter is NOT reverse polarity protected—if the positive terminal of the battery is connected to the negative terminal of the inverter and vice versa, severe damage to the inverter will occur and this will void the warranty. Before connecting the DC wires from the batteries to the inverter, verify the correct battery voltage and polarity using a voltmeter. If necessary, color code the cables (with colored tape): red for positive (+), and white for negative (-) to avoid polarity confusion.

Info: The DC overcurrent device (i.e., circuit breaker or fuse) must be placed in the positive (red) DC cable line between the inverter’s positive DC terminal and the battery’s positive terminal (red)—as close to the battery as possible. For maximum protection, install it within 18 inches (45 cm) of the battery.

To wire the inverter to the battery bank:

1. Route an appropriately sized DC negative wire (marked white) from the negative terminal of the battery bank to the inverter's negative terminal (Item 10, Figures 1-2 and 1-3; Item 8, Figure 1-5).
2. Mount the fuse/disconnect assembly (or circuit breaker) as near as practical to the batteries and leave open (i.e., no power to inverter).

   WARNING: DO NOT close the DC circuit breaker or connect the fuse to connect battery power to the inverter at this time. This will occur after the installation is complete.

   CAUTION: If connecting live battery cables to the inverter DC terminals, a brief spark or arc may occur; this is normal and due to the inverter's internal capacitors being charged.

3. Route and connect an appropriately sized DC positive wire (marked red) from the inverter's positive DC terminal (Item 11, Figures 1-2 & 1-3; Item 11, Figure 1-5) to one end of the fuse/disconnect assembly (or circuit breaker).
4. Connect a short wire (same rating as the DC wires) to the other side of the DC circuit breaker (or one end of the fuse/disconnect assembly) and the other end of that short wire to the positive terminal of the battery bank (see Figure 2-1 or Figure 2-2 for reference). This is essential to ensure even discharging across the entire battery bank.
5. Ensure the DC wire connections (on batteries, inverter, and DC circuit breaker/fuse) are flush on the surface of the DC terminals, and all hardware stacked correctly (see Figures 2-7 and 2-8). Verify all DC connections on the inverter are torqued correctly (see Table 2-1), and the total cable distance from the inverter to the battery is within the requirement of Section 2.4.1 (DC Wire Sizing).
6. Once the DC connections are completely wired and tested, coat the terminals with an approved anti-oxidizing spray.
7. If batteries are in an enclosure, perform a final check of the connections to the battery terminals, then close/secure the battery enclosure.
8. Route an appropriately sized DC ground wire (see Table 2-2) from the inverter's DC chassis ground connection to a dedicated system ground.
9. Once the installation is complete and all connections verified, close the fuse disconnect (or circuit breaker) to provide power to the inverter.

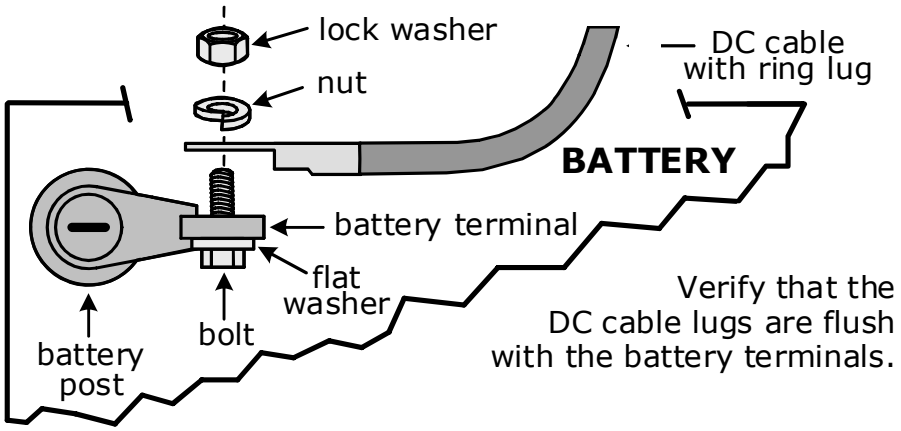

Figure 2-7, DC Cable to Battery Terminals

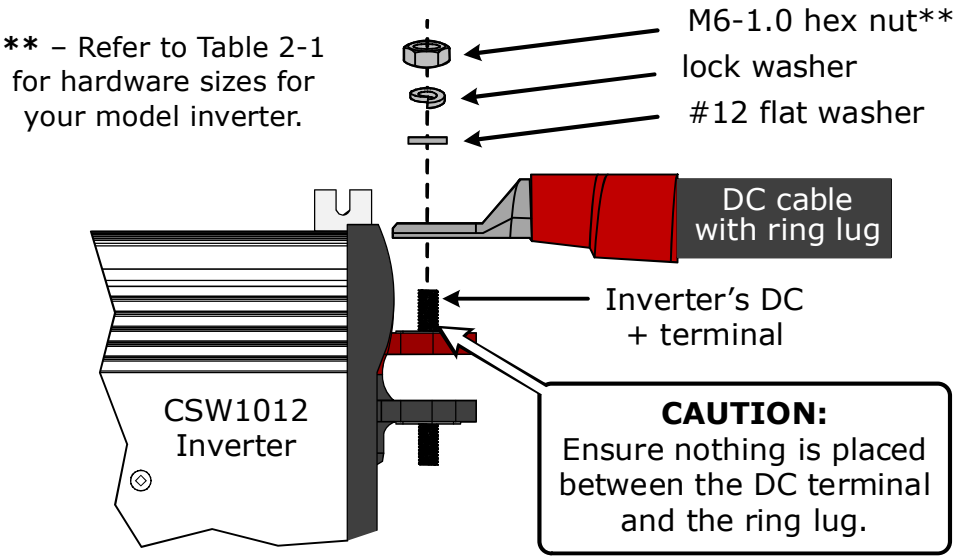

Figure 2-8, DC Cable to Inverter's DC Terminals

2.4.7 Appliances and Run Time

The CSW Series inverters can power a wide range of household appliances including small motors, hair dryers, clocks, and other electrical devices. As with any appliance using batteries for power, there is a certain length of time that it can run—this is called "run time." Table 2-3 below provides estimates of power consumption and run time for various appliances using a 12V-120AH battery bank.

Table 2-3, Appliance Power Consumption and Run Time

Load	Consumption	Estimated Run Time
Cordless Phone	5W	180 hrs
Clock/Radio	8W	135 hrs
Table Lamp	40W/60W	27 hrs/18 hrs
Freezer (8.8 cu ft)	80W	15 hrs
20" LCD TV	100W	11.5 hrs
Refrigerator (18 cu ft)	120W	9 hrs
Sump Pump (1/2 hp)	350W	3 hrs
Microwave (mid-size)	1000W	49 min
Coffee Maker	1200W	37 min

2.5 Testing the Inverter

Before proceeding, first test whether the inverter was successfully installed. Use the functional test below to test the inverter, and then perform the GFCI test that follows to ensure the protection device is functioning properly.

2.5.1 Inverter Functional Test

After all electrical connections to the inverter and batteries have been completed, plug a small AC load (e.g., 40W light bulb or small appliance) into the GFCI's outlet, and follow these steps to test the installation and the inverter's operation.

CSW412 Inverters:

1. Toggle the ON/OFF Power Switch to the ON (I) position to turn the unit on.
2. The Power Indicator will turn on to indicate that the AC output power is available.
3. Check that the AC load is on (i.e., the bulb lights).
   Note: *If the bulb does not light, the GFCI may have tripped. Reset the GFCI by pressing the RESET button*.

CSW1012 and CSW2012 Inverters:

1. Press and hold the Power/Select button until a beep sound is heard (about 1 second). The Status light turns on.
2. Check that the digital display alternately shows the inverter's measured battery voltage and output power.
3. Check that the AC load is on (i.e., the bulb lights).
   Note: *If the bulb does not light, the GFCI may have tripped. Reset the GFCI by pressing the RESET button*.

If the inverter passes all steps, it is functioning properly and ready for use.

If the inverter fails any of the steps, refer to the troubleshooting information in Section 4.0.

2.5.2 GFCI Function Test

Use the steps below to periodically test the GFCI to ensure it is functioning properly.

1. Turn the inverter on.
2. Plug a small AC load (e.g., 40W light bulb) into the GFCI's outlet.
3. Check that the AC load is on (i.e., the bulb lights).
4. Press the GFCI's TEST button. The GFCI's RESET button should pop out, and the power should shut off (light bulb goes out).
   Note: *If the bulb remains lit or the RESET button does not pop out, the GFCI may not be functioning properly*.
5. Press the RESET button. The AC load should come back on (the bulb lights again).

3.0 Operation

When the inverter is properly connected to batteries and turned on, the direct current (DC) from the batteries is transformed into a pure sine wave alternating current (AC). This AC is similar to the voltage provided by your utility and is used to power any electrical appliances (i.e., AC loads) connected to the inverter's output.

3.1 CSW412 Operation

The CSW412 inverter uses a front panel that contains a power on/off switch, two LED indicators, a USB port, and a GFCI AC output receptacle.

ON/OFF Power Switch: used to turn the inverter on and off. To turn the unit on, toggle the switch to the ON (I) position. The Power indicator lights green to indicate that the AC output power is available. Press the ON/OFF switch to the OFF (O) position to turn the unit off.

WARNING: The Power ON/OFF Switch is not a power disconnect switch and will not remove the DC power from the inverter. Disconnect all power to the inverter before working on the unit.

Status Indicator: may light green or red to indicate the inverter's status. When the status indicator lights:

- **Power LED (green)** – the inverter has power and is turned on.
- **Fault LED (red)** – an inverter fault has been detected which caused the inverter to shut down. If the fault indicator comes on:
  1. Determine and resolve the fault condition (e.g., high or low voltage, load too large, or over-temperature).
  2. Reset the inverter by toggling the ON/OFF Power Switch off, then back on.

USB Port: enables you to power and charge a USB-enabled device (provides 5 VDC/2.1 A).

CAUTION: Some USB-powered products may be damaged when connected to this USB port. If in doubt, check with the product's manufacturer.

GFCI Outlet: the two GFCI-protected AC outlets are used to plug in and power an AC load. It protects the user against hazardous electrical shocks.

3.2 CSW1012 and CSW2012 Operation

The CSW1012 and CSW2012 inverters use a front panel that contains a power/select button, a status indicator, a digital display for viewing system status, a remote port, a USB port, and a GFCI AC output receptacle.

Power/Select Button: used to turn the inverter on and off. To turn the unit on, press and hold the button for 1 second until you hear a "beep". The digital display alternately shows the unit's measured battery voltage and AC output power, and the status indicator lights green. Press the power/select button to turn the unit off.

WARNING: The power/select button is not a power disconnect switch and will not remove the DC power from the inverter. Disconnect all power to the inverter before working on the inverter.

Status Indicator: may light green, amber, or red to indicate the inverter's status. When the status indicator lights:

- **Green** – the inverter is operating normally.
- **Amber** – a warning has been detected. The inverter will shut down at any time. Check the error code on the digital display.
- **Red** – an error has been detected and the unit has shut down. Check the error code on the digital display.

When the status indicator lights amber or red, use the digital display and the troubleshooting tables in Section 4.0 to resolve the issue.

Digital Display: has one line of three alphanumeric characters that alternately shows the inverter's measured battery voltage (in volts) and AC output power (in kilowatts) under normal operating conditions. It also displays error/warning codes that alert you to problems with the unit, and are used in conjunction with the troubleshooting tables in Section 4.0 to resolve any issues with the inverter's operation. See Table 3-1 below.

Table 3-1, Examples of Digital Display Readings

Display	Meaning
12.5	Measured battery voltage.
0.80	Total AC output power in kW (800W as shown).
E01	Error or warning code. See Troubleshooting section for details.

Remote Port: used to connect an optional ON/OFF remote switch (sold separately) that works in parallel with the power/select button.

USB Port: enables you to power and charge a USB-enabled device (provides 5 VDC/2.1 A).

CAUTION: Some USB-powered products may be damaged when connected to this USB port. If in doubt, check with the product's manufacturer.

GFCI Outlet: the two GFCI-protected AC outlets are used to plug in and power an AC load. It protects the user against hazardous electrical shocks.

3.3 Understanding Loads

The inverter can power most loads within its power rating, however, there are special conditions that can cause a load to behave differently than expected. Following are some common problems encountered when using this inverter.

USB loads – When using the USB connector, be sure that the device you will be connecting will accept 5 volts (≤2.1 amps) and can be charged or powered using another power source. The USB port can safely power and charge a lot of devices such as: MP3 players, mobile phones, and portable video game players. However, some devices such as GPS receivers and some cameras may not work and may even be damaged. Refer to the owner's guide for each device to determine its compatibility.

Motor loads not starting – Some appliances, particularly those with induction motors, require a much higher start-up surge than they do when running. Pumps, freezers and refrigerators (compressors) are the most common. The inverter may not be able to start some of these appliances even though their rated current draw is within the inverter's limits. If you have the CSW1012 or CSW2012 and a motor-operated appliance refuses

to start, observe the VOLTS indicator on the digital display while you are trying to start the appliance. If the display shows a battery drop below 11 volts while the inverter is trying to start the motor, this may explain why the appliance won't run. Make sure the length and diameter of the battery cables are appropriate. Check that the battery connections are good and that the battery is fully charged. If the cables are sized correctly, the connections are good, and the battery is charged, you may need a larger battery bank (see Loads turning on and off).

Loads turning off and on – If a load starts but quickly turns off, then the battery may not be able to deliver the necessary amperage to drive the load. If the battery bank cannot deliver the necessary amperage to drive a heavy load, the inverter will shut OFF due to low voltage (<10.5 VDC). The battery voltage can then slowly rise back above the low voltage reconnect voltage (11.8 VDC) causing the inverter to resume operation. As soon as the heavy load draws the batteries down, this cycle will continue unless the load is reduced or more batteries are added.

Loads too large – Although the CSW Series inverter can provide high surge power up to two times the rated output power, some appliances may still trigger the inverter shutdown/protection system. In these instances, a higher power inverter may be required.

Running several loads at once – Sometimes the total surge requirement of all the loads is higher than the CSW Series inverter can deliver. You may want to turn them on individually to ensure that the inverter does not have to deliver the starting current for all the loads at once.

3.4 System Maintenance

Performing routine maintenance on the CSW Series inverter and any connected batteries can ensure your energy system remains in optimum operational condition.

Battery Charging

When possible, recharge your batteries when they are about 50% discharged or earlier. This gives them a much longer life cycle than recharging when they are almost completely discharged.

Inverter Maintenance

Routine maintenance is required to keep the CSW Series inverter operating properly. Periodically you should:

- Clean the exterior of the unit with a damp cloth to prevent the accumulation of dust and dirt.
- Tighten the screws on the DC input terminals.

4.0 Troubleshooting

Use Table 4-1 to troubleshoot your inverter. For CSW1012 or CSW2012 inverters, also use Table 4-2 to view the unit's digital display to determine what condition triggered the error/warning code and what corrective action is needed.

Table 4-1, Troubleshooting Guide

Problem	Symptom	Solution
No AC output. Status indicator is off.	The unit is off.	Turn on the unit. See Operation instructions.
	No power to inverter.	Check if fuse or disconnect switch (if installed) is either blown or turned off.
No AC output. Status indicator is green.	GFCI was tripped.	Check the connected load and reset the GFCI.
No AC output. Fault indicator is on.	Unit has detected a fault and has shut down.	Determine and resolve the fault condition (e.g., high or low voltage, load too large, or over-temperature).
	For CSW1012 and CSW2012:	Check error code on the display. Refer to Table 4-2.

Table 4-2, CSW1012 and CSW2012 Inverter Error Codes

Code	Condition	Corrective Action
E01	Unit has sensed the input voltage is low (<10.5 VDC) and has shut down.	Immediately recharge the battery (to at least 11.8 VDC), and then restart unit.
E02	Unit has sensed the input voltage is high (≥15.5 VDC) and has shut down.	Check the battery voltage, or if an external charger is connected to the battery bank.
E03	Unit output has sensed an overload or short circuit and was shut down.	Check the load connected to the output. Reduce the load and restart the unit.
E04	Unit has sensed the internal temperature was high and has shut down.	Turn unit off and wait 15 minutes before restarting. Check for blocked air flow.
E05	Unit has sensed the input voltage is low and has initiated a warning alarm (@11.2 VDC).	The alarm will continue until the battery has been recharged to ≥11.8 VDC .
E06	Unit has sensed that the connected load is close to the overload shutdown limit.	Reduce the connected load.
E07	Unit sensed the internal temperature is high and close to the thermal shutdown limit.	Reduce load and check if any of the unit's ventilation is blocked.

5.0 Specifications

Table 5-1, CSW Series Specifications

Model:	CSW412	CSW1012	CSW2012
Electrical Specifications			
Continuous Power[1]	400 W	1000 W	2000 W
Surge Power (Peak)[2]	800 W	2000 W	4000 W
AC Output Voltage (12.5V)	120 VAC RMS ± 5%		
AC Output Current	3.3 AAC	8.3 AAC	16.6 AAC
AC Output Voltage Range	104-127 VAC		
AC Output Frequency	60 Hz ± 0.5 Hz		
AC Output Waveform)	Pure sine wave (<3% THD)		
AC Output Receptacle	NEMA 5-15, Dual GFCI with LED indicator		
Optimum Efficiency	>90%		
DC Input Voltage (Nominal)	12.5 VDC		
DC Operation Voltage Range[3]	10.5 – 15.75	10.5 – 15.5 VDC	
DC Input Current (Full Load)	38 DCA	94 DCA	187 DCA
DC Input Current (No Load)	<0.8 ADC	<1.2 ADC	<1.2 ADC
DC Output (USB port)	5V, 2.1A		
Protection			
Low Voltage Alarm	11.0 VDC	11.2 VDC	
Low Voltage Shutdown	10.5 VDC		
Low Voltage Recovery	12.0 VDC	11.8 VDC	
High Voltage Shutdown[3]	15.75 VDC	15.5 VDC	
Output Power Warning	NA	Yes, with warning code	
Output Power Shutdown	Yes	Yes, with shutdown code	
Output Power Shutdown	Yes	Yes, with shutdown code	
Temperature Warning	NA	Yes, with warning code	
Temperature Shutdown	Yes	Yes, with shutdown code	
Display Specifications			
LED Status Indicator	Yes (Power, Fault)		
Digital display	NA	volts in, power out, error codes	
General Specifications			
Operating Temperature	32°F to 104°F (0°C to 40°C)		
Inverter Weight	3.8 lb (1.7 kg)	6.6 lb (3.0 kg)	11.5 lb (5.2 kg)
Inverter Size (L x W x H) CSW412:	7.9 x 6.9 x 3.4” (20 x 17.5 x 8.7 cm)		
Inverter Size (L x W x H) CSW1012:	12.6 x 6.9 x 3.4” (32.1 x 17.5 x 8.7 cm)		
Inverter Size (L x W x H) CSW2012:	16.5 x 9.1 x 4.3” (41.9 x 23.0 x 11.0 cm)		
Warranty	One Year		
Regulatory Approval			
Conforms to UL STD 458, Certified to CSA STD C22.2 No. 107.1			

1: Specifications met when DC voltage at nominal (12.5V) and temp at 25°C.

2: *Surge ratings are based on resistive load (output voltage may drop).*

3: Damage can occur if input voltage exceeds 16 VDC.

DMX Power

www.DMX-Power.com

64-0063 J Owner's Manual, CSW 12V Series