MAGNUM ENERGY

ME-AGS-N

Automatic Generator Start for Network Versions

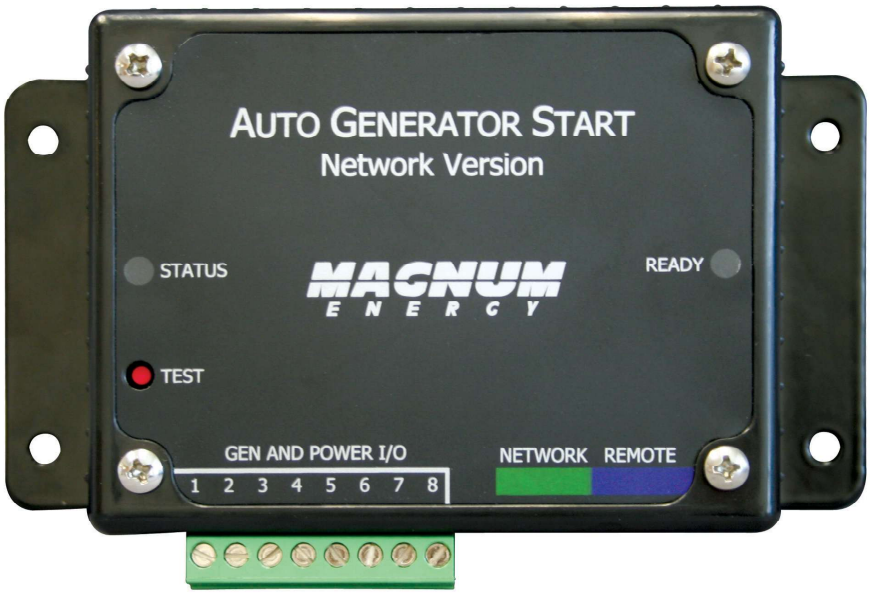

Owner's Manual

DMX POWER

Disclaimer of Liability

The use of this manual and the conditions or methods of installation, operation, use, and maintenance of the ME-AGS-N (Auto Generator Start – Network) controller is beyond the control of DMX Power. Therefore, this company does not assume responsibility and expressly disclaims liability for loss, damage, or expense whether direct, indirect, consequential or incidental that may arise out of or be any way connected with such installation, operation, use, or maintenance.

Due to continuous improvements and product updates, the images shown in this manual may not exactly match the unit purchased.

Restrictions on Use

The ME-AGS-N remote may only be used in life support devices and systems with the express written approval of DMX Power. Failure of this inverter can reasonably be expected to cause failure of that life support device or system, or to affect the safety or effectiveness of that device or system. If the ME-AGS-N fails, it is reasonable to assume the health of the user or other persons may be endangered.

Copyright Notice

Copyright 2025 by DMX Power. All rights reserved. Permission to copy, distribute, and/or modify this document is prohibited without express written permission from DMX Power.

Document Information

Description – ME-AGS-N Owner's Manual
Part Number and Revision – 64-0039 Rev F
Date Published – October 2025

For the latest version of DMX documentation including this manual see the documentation menu on our website at: www.dmx-power.com

Contact Information

DMX Power
Phone (Toll-Free): 800-553-6418 or 651-653-7000
Technical Questions: support@dmx-power.com
Warranty or RMA: warranty@dmx-power.com
Web: www.dmx-power.com

Statement of Appreciation

Thank you from all of us at DMX Power for purchasing this ME-AGS-N controller.

At DMX Power, we are committed to providing you with quality products and services, and hope that your experience with us is pleasant and professional.

IMPORTANT PRODUCT SAFETY INSTRUCTIONS

This manual contains safety instructions that must be followed during the installation and operation of this product. Read all instructions and safety information contained in this manual before proceeding.

Safety Symbols

To reduce the risk of electrical shock, fire, or other safety hazard, the following safety symbols have been placed throughout this manual to indicate dangerous and important safety instructions.

WARNING: Indicates that failure to take a specified action could result in physical harm to the user.

CAUTION: This symbol indicates that failure to take a specified action could result in damage to the equipment.

Info: This symbol indicates information that emphasizes or supplements important points of the main text.

Product Safety Alerts

WARNING:

- All electrical work must be performed in accordance with local, state, and federal electrical codes.
- This product is designed for indoor and compartment installation. Do not expose to rain, snow, moisture, or liquids of any type.
- Use insulated tools to reduce the chance of electrical shock or accidental short circuits.

WARNING: Severe personal injury, death, and equipment damage can result from operating the generator in a garage, building, or confined space. The generator produces dangerous fumes when it is running. If the generator is installed in an RV, disable the AGS system to prevent the generator from starting when the RV is in a confined space.

WARNING: ENGINE EXHAUST GASSES CAN BE DEADLY. Install a reliable carbon monoxide alarm in your vehicle, building, or home before starting a generator or enabling the AGS. All engine exhaust contains carbon monoxide: an odorless, colorless gas that can cause severe personal injury/ death. Symptoms of CO poisoning:

- dizziness, headache or throbbing temples,
- weakness or muscular twitching,
- sleepiness or confusion, and nausea or vomiting

If you experience any of the above symptoms, get to fresh air immediately. If symptoms persist, seek medical attention. Shut down the generator and do not operate until the unit is inspected and repaired.

WARNING: With an AGS system installed, exhaust CO, electrical shock, and moving parts hazards are possible due to unexpected engine/generator starting. Disconnect the engine/generator starting battery cables or AGS connection to the engine/generator before working on the generator or any other electrical system powered by it.

Battery Safety

- Remove all jewelry (such as rings, watches, bracelets, etc.) when installing or performing maintenance on your batteries and the inverter system.
- Always disconnect the batteries or energy source prior to installing or performing maintenance on your batteries and inverter system. Live power may be present at more than one point since an inverter utilizes both batteries and AC. Turning off the inverter may not reduce this risk. As long as AC power is connected, it will pass through the inverter regardless of the power switch on the inverter or the ON/OFF INVERTER pushbutton on the remote/router.
- Wear eye protection such as safety glasses when working with batteries.
- Never work alone. Always have someone near you when working around batteries.
- Never use old or untested batteries. Check each battery's label for age, type, and date code to ensure all batteries are identical.
- Batteries are sensitive to changes in temperature. Always install batteries in a stable environment.

Table of Contents

1.0 Introduction 1
1.1 AGS-N System Requirements 2
1.2 AGS-N Components 2
1.3 ME-AGS-N Features 3
2.0 Installation 4
2.1 Installation Requirements 4
2.2 Required Materials/Tools (not included) 6
2.3 Mounting Procedure 6
2.4 Connecting the Supplied Cables to the AGS-N 7
2.4.1 Remote Temp Sensor Cable 7
2.4.2 Network Communications Cable 7
2.5 Connecting the AGS-N to an Inverter 8
2.5.1 Cable Connections with Multiple Devices 9
2.6 Connecting the AGS-N to a Generator 10
2.6.1 Power Connections (Terminals 3 & 4) 11
2.6.2 Generator Run Sense Connection (Terminals 2 & 4) 11
2.6.3 Gen Start/Stop Connections (Terminals 1, 5, 6, 7, & 8) 14
2.6.4 Common Generator Wiring Diagrams 15
2.7 Warning Label 16
3.0 AGS-N Controller Setup 21
3.1 Configuring the Internal AGS-N Settings 21
4.0 AGS-N Functional Operation 23
4.1 AGS Power-Up Test 23
4.2 Generator Wiring Test 23
4.3 AGS-N Controller LED Indicators 24
4.3.1 STATUS LED Indicator 24
4.3.2 READY LED Indicator 24
5.0 AGS-N Controller Troubleshooting 25
5.1 Using the AGS-N's LED Indicators 25
5.2 Generator Starting/Running Troubleshooting 26
5.2.1 If the Generator does not Start or Run 26
5.2.2 If the STATUS LED does not go Solid 26
6.0 Appendix 29
6.1 Other Accessories and Equipment 29
6.1.1 Optional Accessories for the AGS-N 29
6.2 AGS Revisions and Inverter Compatibility 29

List of Figures

Figure 1-1, Components of the AGS-N Controller 3
Figure 2-1, AGS-N System Diagram 5
Figure 2-2, AGS-N Dimensions 6
Figure 2-3, Remote Temp Sensor Connection 7
Figure 2-4, Network Communication Cable..... 7
Figure 2-5, Connecting an AGS to an Inverter (Small) 8
Figure 2-6, Connecting an AGS to an Inverter (Large) 8
Figure 2-7, Multiple Network Devices – Star 9
Figure 2-8, Multiple Network Devices – Daisy Chain 9
Figure 2-9, Connected Devices at the Same Potential 10
Figure 2-10, Generator Run Sense Options.....13
Figure 2-11, Wiring to the AGS-N's Terminal Block 15
Figure 2-12, Warning Label 16
Figure 2-13, Two-wire Control 17
Figure 2-14, Three-wire Momentary Control 18
Figure 2-15, Three-wire Maintain Control 19
Figure 2-16, Three-wire Momentary Control (with Preheat) 20
Figure 3-1, Inside the AGS-N Controller.....21
Figure 4-1, AGS–N Front Panel Controls and Indicators.....24

List of Tables

Table 3-1, Gen Type Settings.....22
Table 5-1, AGS-N Controller Troubleshooting Guide 25

1.0 Introduction

Congratulations on purchasing the ME-AGS-N. This is the 'network' version of a Magnum Automatic Generator Start (AGS) controller, and is set up/operated via a Magnum inverter and remote control (e.g., ME-RC, ME-ARC, or ME-RTR).

Info: If you need an AGS, but are not using a Magnum inverter/ charger, use the ME-AGS-S (AGS – Standalone).

Using the ME-AGS-N (and depending on your particular remote), your generator can be set up to automatically start and stop based on the following conditions:

- **Battery Voltage** – By monitoring battery voltage, the AGS autostarts the generator when battery voltage falls to a certain level, and autostops the generator when battery voltage either rises to a higher level or goes into the Float charge stage—depending on the remote control.
- **Time of Day** – Starts/stops the generator daily based on selected start/stop times (per the remote control's clock).
- **Inverter Load Amps** – Starts and stops the generator based on the loads powered by the inverter (assists with larger loads).
  Note: *Only applicable to MSH and MS-PAE Series inverters.*
- **Battery SOC** – Monitors your battery system and automatically starts the generator when the battery requires charging—based on the actual SOC (State of Charge) of the battery.
  Note: *Battery SOC is a more accurate method than using battery voltage as a criteria to determine when a battery requires charging.*
- **Rising Temperature** – Continuously monitors the temperature of the surrounding area, and automatically starts the generator whenever power is needed to run an AC or to cool down an area.

Info: The Battery SOC autostart/autostop feature requires an installed, optional ME-BMK or ME-BMK-NS (Battery Monitor Kit) accessory to determine the battery's SOC.

The AGS-N is also equipped with the following operational features:

- Allows manual on/off control (ME-ARC and ME-RTR only) and automatic control of the generator
- Compatible with 12, 24, or 48-volt systems
- Adjustable settings made easy using the remote's AGS menus (e.g., ME-RC, ME-ARC, or ME-RTR)
- Quiet Time setting prevents generator operation at night
- TEST button that confirms if installation wiring is correct
- Removable 8-port terminal block for easy wiring/powering down
- Front panel LED indicators for gen start/stop status and faults

Generator Compatibility

The AGS is compatible with most AC or DC generators with either 2-wire or 3-wire start controls, such as: Onan, Generac, Martin, Kohler, Honda, Yamaha, and many others. A list of generators that have been successfully used with the AGS (and their respective wiring diagrams) can be found at: www.Magnum-Dimensions.com.

1.1 AGS-N System Requirements

The AGS requires several other components to operate correctly.

- **Generator (automatic start):** The generator should have automatic starting capability. The generator must have start and stop controls [e.g., electric starter and electric choke (for gasoline units)], and safety sensors to autostart/autostop the generator should the following conditions occur: low oil pressure, high temperature, engine start over-crank, over/ under frequency (speed), low coolant level, etc. The generator should also supply a *generator run signal*, which the AGS uses to detect if the generator is running. The generator run signal must be from 10 to 40 volts DC, and can be provided from a generator hour meter signal or a switched B+ terminal.

  Info: A generator run signal is not required when using Gen Type: 2-Wire Standby Mode and an AGS with a revision of 5.2 or higher.

- **Remote Control:** A separate remote control (e.g., ME-RC, ME-ARC, or ME-RTR) is required to configure the AGS and to monitor any generator starting and stopping activity. Some advanced generator start/stop features are not available on the standard ME-RC and require the ME-ARC or ME-RTR advanced controllers. Refer to your remote owner's manual to determine the available AGS autostart and autostop features.
- **Inverter:** A network-capable inverter is required in order to communicate network information from the remote control to the AGS-N. The inverter must also have the internal software to work with the remote and to allow the desired AGS features.

1.2 AGS-N Components

The ME-AGS-N is shipped with the following:

- ME-AGS-N controller
- 60' Remote temp sensor cable
- Warning label
- 10' Network comm cable
- #8 x ¾"mounting screws (x4)
- ME-AGS-N Owner's Manual

1.3 ME-AGS-N Features

The AGS module provides the generator's wiring connections and the following components (refer to Figure 1-1):

1. **STATUS Indicator:** a bi-color (green or red) LED indicator that illuminates to provide information on the AGS's operation.
2. **TEST Button:** a momentary pushbutton that allows the AGS system to be tested for correct wiring and generator start/stop operation.
3. **Wiring Terminal Block:** an 8-port friction-fit connector that powers the AGS and connects the generator's start/stop and run sense wires.
4. **Mounting Flange:** used to secure the AGS to a shelf or a wall. Four black oxide #8 x 3/4 Phillips, pan head screws are provided to mount the AGS.
5. **READY Indicator:** a green LED indicator that illuminates to signal that the AGS is powered (flashes if the optional temp sensor is not connected).
6. **NETWORK Connection Port (green label):** a RJ14 port (6P6C – 6-position, 6-contact female connection) that provides the connection point for the network communication cable.
7. **REMOTE Connection Port (purple label):** a RJ14 port (6P6C – 6-position, 6-contact female connection) that provides the connection point for the remote temp sensor cable (Figure 2-3).
8. **Internal Access Screws:** four #6-32 x 3/8 Phillips screws that must be removed to access the DC Input Jumper and the 4-position DIP Switch.

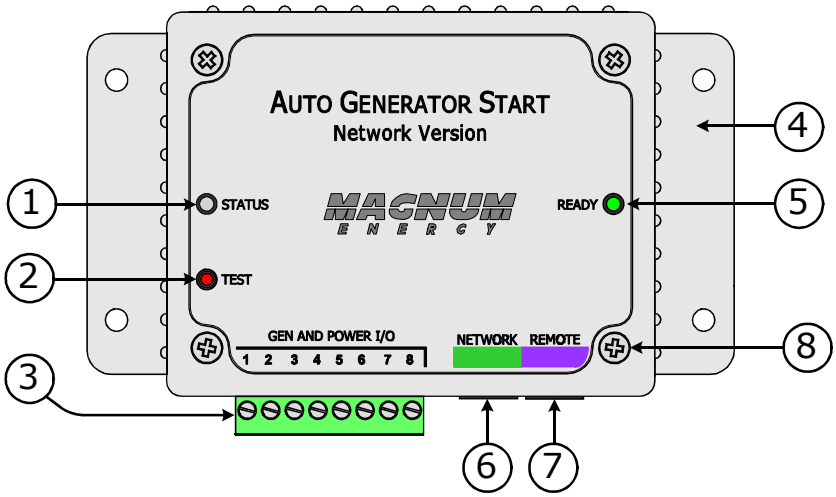

Figure 1-1, Components of the AGS-N Controller

2.0 Installation

Installing the AGS is a simple process. Before installing, review the Important Product Safety Instructions on page ii of this manual and read the section below to ensure the overall system requirements are met. To assist you in planning and designing your installation, review the basic system diagram shown in Figure 2-1.

WARNING: The AGS is not ignition-protected and should not be installed in a location that requires ignition-protected equipment. To prevent fire or explosion, do not install the AGS controller in any area with extremely flammable liquids like gasoline or propane, or in an area that contains connections between components of a fuel system.

CAUTION: Installations should be performed by qualified personnel, such as a licensed or certified electrician. It is the installer's responsibility to determine which safety codes apply and to ensure that all applicable installation requirements are followed.

2.1 Installation Requirements

Review these requirements prior to performing the installation.

- For the AGS to automatically start and stop the generator properly, the generator must include an electric start and an automatic choke. To prevent generator damage and to ensure reliable operation, use generator models designed for unattended operation. These models should also be equipped with remote operation connections and have protective systems that shut down the generator when low oil pressure, over-temperature, starter lockout, or over-crank conditions occur.
- The AGS is connected to the inverter by a 10-foot communications cable. Before installing/connecting any wires, first determine: 1) communications cable route throughout the home/vehicle/boat from the AGS controller to the inverter, 2) the start/stop signal wire route from the AGS to the generator, and 3) the wire route from the AGS controller to the monitored battery bank.
- Always check for existing electrical, plumbing, or other areas of potential damage BEFORE drilling or cutting into walls.
- If installing the AGS in a boat, RV or truck, ensure the conductors passing through walls, bulkheads, or other structural members are protected to minimize insulation damage such as chafing, which can be caused by vibration or constant rubbing.
- Do not mount the AGS controller in a closed battery compartment, or in an area where water (any liquid) can enter the AGS and cause shorting or corrosion.
- The AGS, if possible, should be wired so as not to interfere with the manual start/stop switches on your generator, or with your air conditioner controls if the high temp start feature is used to power the air conditioner.

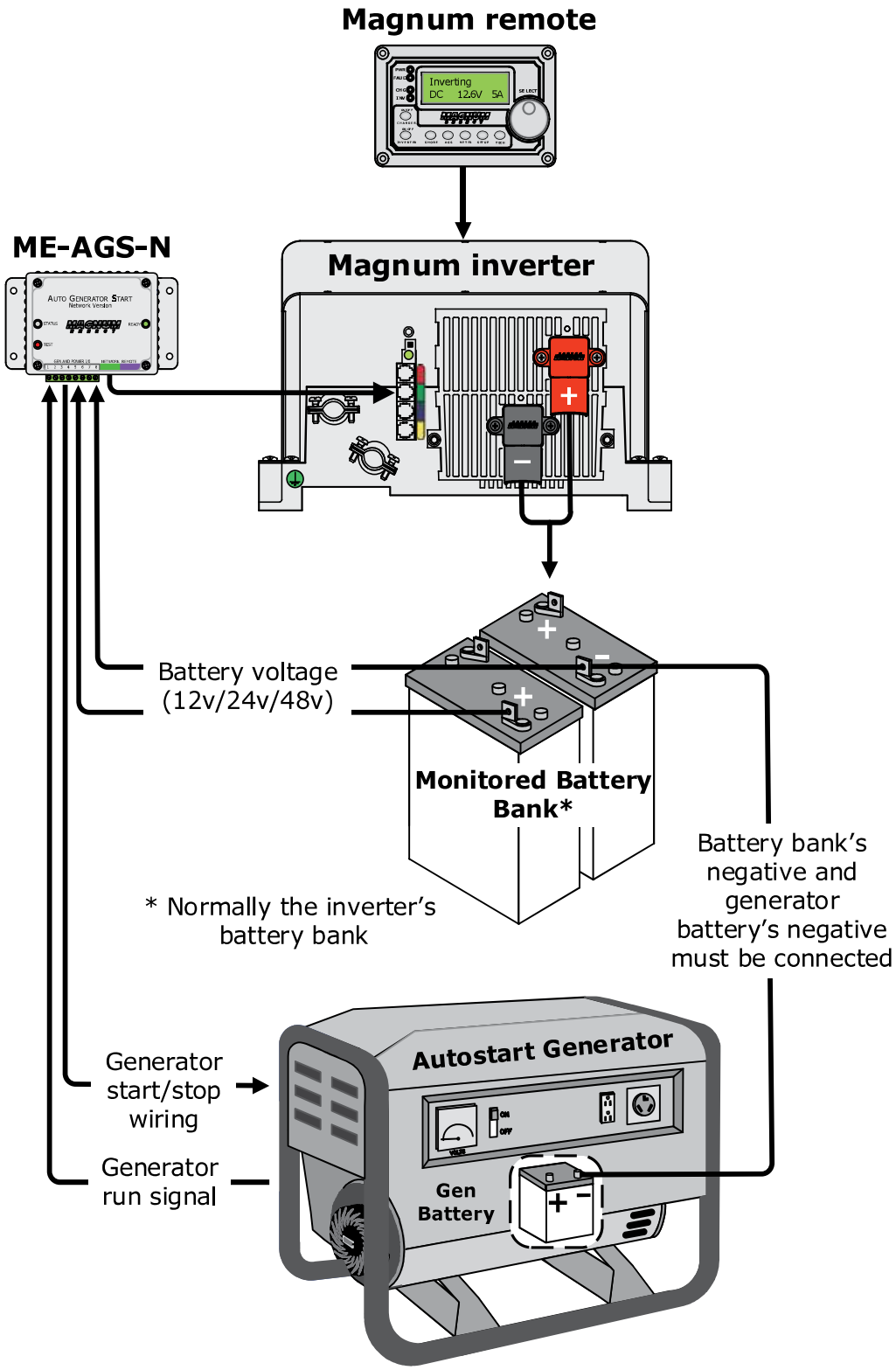

Figure 2-1, AGS-N System Diagram

2.2 Required Materials/Tools (not included)

To properly install the AGS, you need to supply the following:

Required Materials

- #16 to #12 AWG (1.31 to 3.31 mm^2) wire for connecting the AGS to the generator start/stop circuit and to the battery bank
- In-line fuse holders (with a 5-amp DC fuse)

Required Tools

- Phillips screwdriver (#2)
- Flat-blade (1/8”) screwdriver
- Drill bits (7/64” & 1/8”)
- DC voltmeter
- Cut-out tool
- Drill
- Pencil

2.3 Mounting Procedure

Select an inside mounting location that is clean, dry, and protected from extreme temperatures. Figure 2-2 shows the AGS’s dimensions. Remove the 8-port terminal block from the AGS (Figure 1-1, Item 3). Remove the terminal by pulling it straight out.

Info: The AGS controller can be mounted in any direction. Be sure to allow ample room to access the 8-port terminal block, and the NETWORK and REMOTE connection ports.

Note: *Do <u>not</u> plug the terminal block back into the AGS controller until the installation is complete and you are ready to perform the functional operation tests (see directions in Section 4.0).*

- Mount the AGS using the four supplied #8 x 3/4” screws.

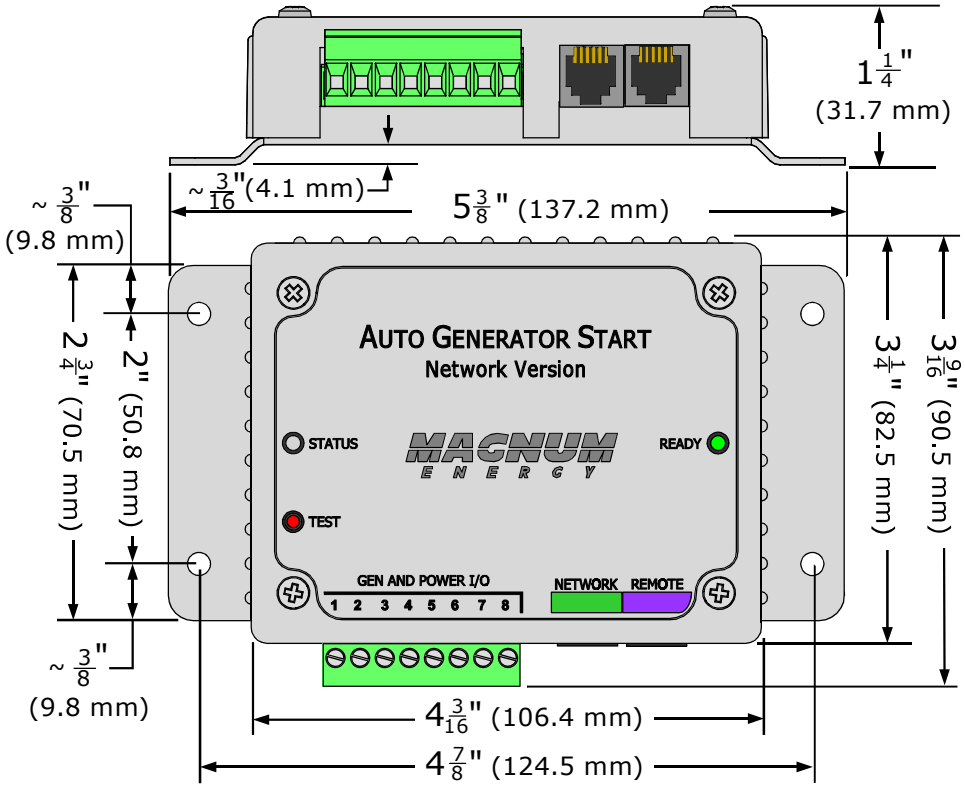

Figure 2-2, AGS-N Dimensions

2.4 Connecting the Supplied Cables to the AGS-N

The AGS comes with two cables. The remote temp sensor cable is required if using the temperature autostart feature, the network communication cable is required for communicating with the inverter/remote.

2.4.1 Remote Temp Sensor Cable

If using the temp autostart feature, connect the plug-in end of the temp sensor cable to the REMOTE (purple) port of the AGS controller, and then place the other end (with sensor) in the area you wish to monitor (see Figure 2-3). The temp sensor cable is 60 ft long.

If you are not using the temperature autostart feature, the temp sensor cable does not need to be connected.

Note: *The AGS's READY light flashes if the temp sensor cable is not connected—this is normal.*

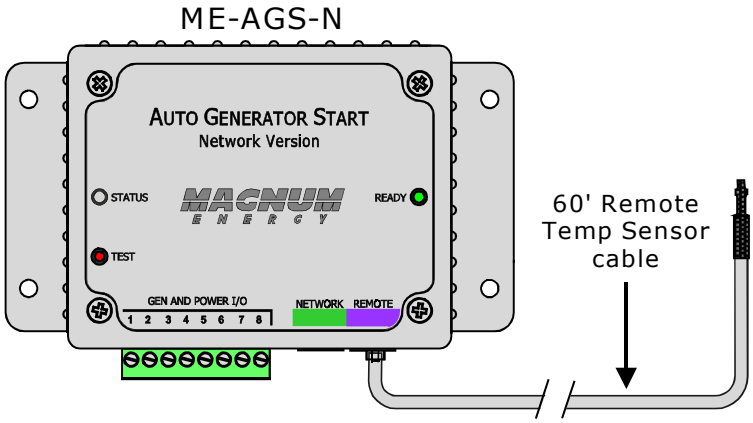

Figure 2-3, Remote Temp Sensor Connection

2.4.2 Network Communications Cable

The network communications cable is a 10-foot, 4-conductor, flat, telephony standard with 6P4C (6-position/4-conductor) connectors on each end. When the 6P4C connectors are held side by side with both of the connector tabs facing the same way, the color of the conductors in each connector is the opposite from top to bottom (as shown in Figure 2-4).

Note: *The network communication cable can be extended up to a length of 200 feet without data degradation.*

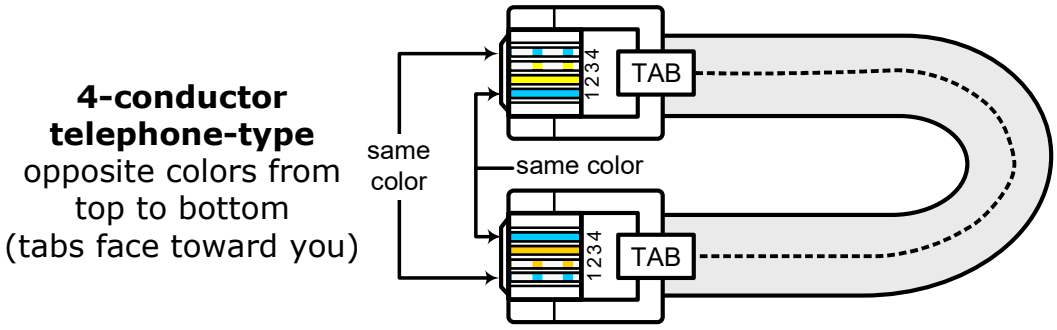

Figure 2-4, Network Communication Cable

2.5 Connecting the AGS-N to an Inverter

- **Small inverter (MM/MMS Series)** – Connect one end of the communications cable to the AGS's RJ14 NETWORK (green) port. Connect the other end of the communications cable to a phone splitter, and then connect the splitter to the Remote (blue) port on the inverter (see Figure 2-5).

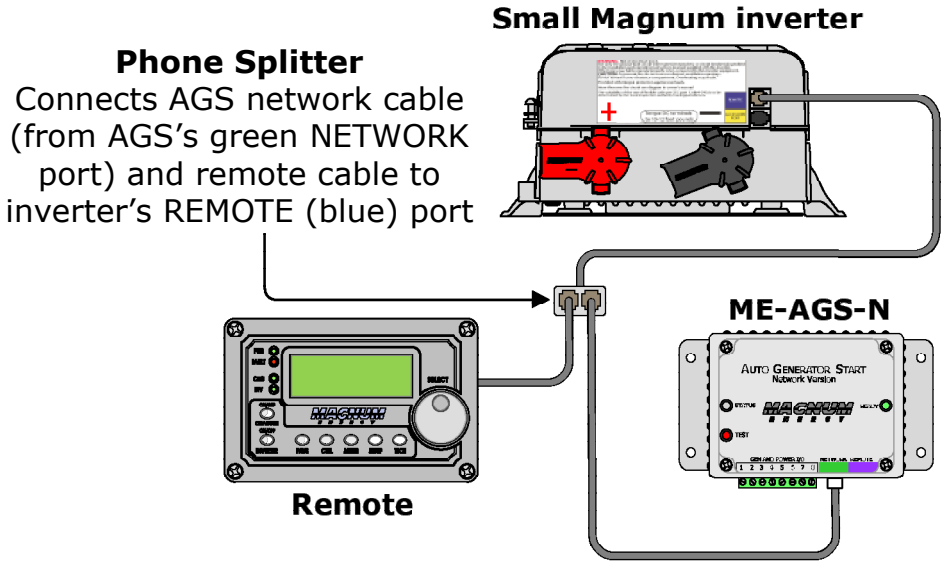

Figure 2-5, Connecting an AGS to an Inverter (Small)

- **Large inverter (ME, RD, MS, MSH, MS-PE, MS-PAE Series)** – Connect one end of the communications cable to the AGS's RJ14 NETWORK (green) port. Connect the other end of the communications cable to the RJ14 Network port (green) on the large inverter (see Figure 2-6).

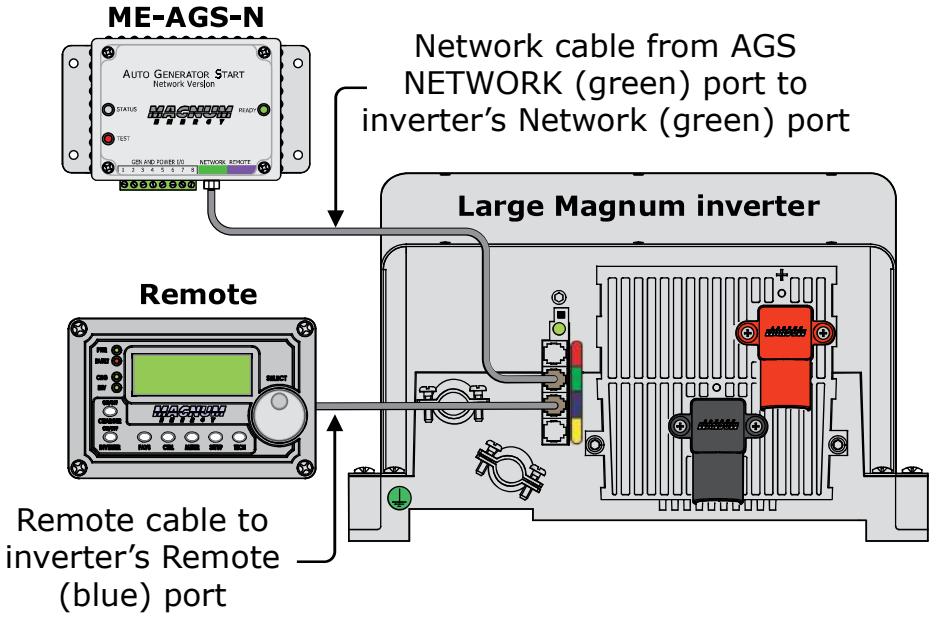

Figure 2-6, Connecting an AGS to an Inverter (Large)

2.5.1 Cable Connections with Multiple Devices

If using more than one networked device, a 4-wire phone splitter is required to connect the devices. Star or Daisy Chain configurations are the two options for interconnecting the devices.

Info: Before deciding on which configuration to use, review the differences in installation and ease of troubleshooting.

- **Star Configuration** – All the network devices connect to the inverter's Network port via a phone splitter—using individual cable runs (Figure 2-7). Since each device is independently connected to the inverter's MagNet or Network port, problems in a cable or a device can be easily isolated; and, if there is a cable failure to one device it does not bring down all the devices.

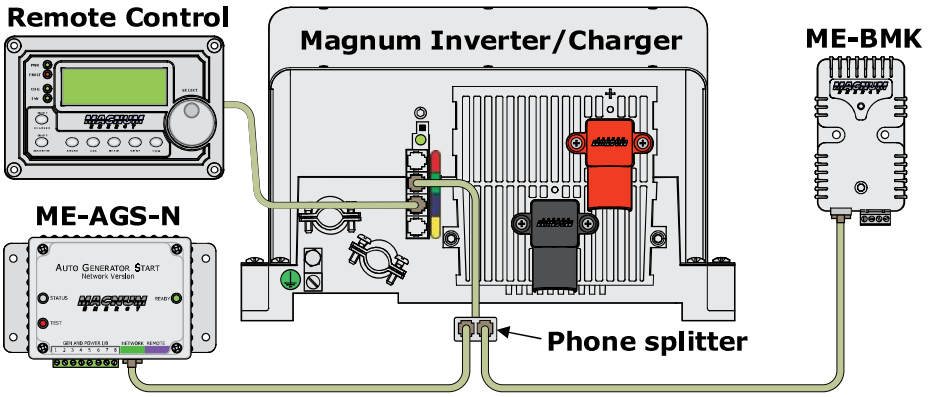

Figure 2-7, Multiple Network Devices – Star Configuration

- **Daisy Chain Configuration** – Network devices are linked in a series (Figure 2-8). If using this configuration, the ME-AGS-N must be the first device connected to the inverter's Magnum Net or Network port—followed by the second network device.

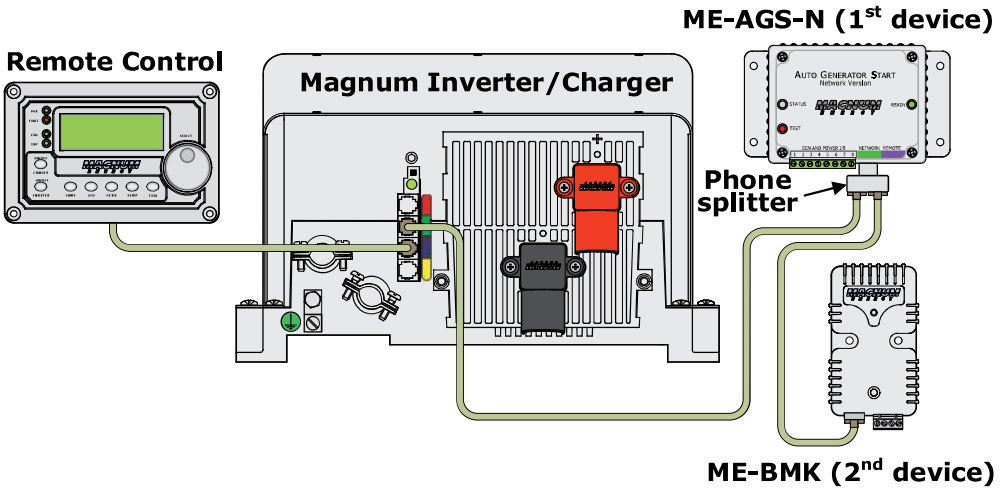

Figure 2-8, Multiple Network Devices – Daisy Chain Configuration

2.5.1.1 Negative Connections

When connecting devices together (via a network communications cable), the return path (i.e., battery negative) of each battery powered device must be at the same potential (i.e., electrically common with each other—see Figure 2-9). This prevents a high-impedance path developing between the connected devices, which can cause the network cable to become the DC return path to the battery—possibly resulting in permanent damage to all connected devices on the network. This also requires that the battery negative connection of each device be always connected before connecting/ disconnecting any battery positive.

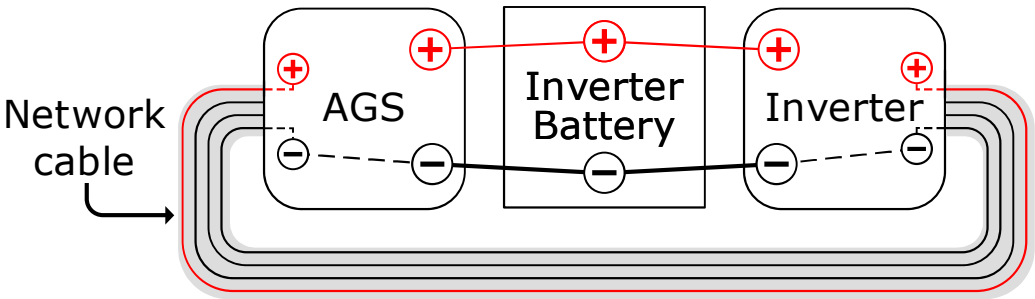

Figure 2-9, Connected Devices at the Same Potential

2.6 Connecting the AGS-N to a Generator

With the AGS already mounted, ensure the 8-port terminal block is removed before proceeding with wiring the generator. Use the info in this section to wire the AGS's terminal block to the generator.

CAUTION: DO NOT plug in the 8-port terminal block until all the wiring to the AGS controller is complete and you are ready to perform the functional operation tests (Section 4.0).

CAUTION: You must use a fuse rated at ≤5 amps to protect all power circuits connected to the AGS (do not fuse the negative connection on Terminal #4). Ensure the fuse is correctly rated for the wire size used. Refer to national/local codes for rating and type. Normally, a minimum #16 AWG (1.31 mm^2) wire is required in order to use a 5-amp fuse.

Info: The green 8-port terminal block accepts CU/AL conductors from #30 to #12 AWG (0.05 to 3.31 mm^2).

2.6.1 Power Connections (Terminals 3 & 4)

Terminal 3 (+) and Terminal 4 (–) on the 8-port terminal block are connected to the monitored battery bank*. These terminals power the AGS controller and monitor the inverter's battery voltage (when used to autostart the generator based on low battery voltage).

** Monitored Battery Bank – When autostarting the generator based on battery voltage (e.g., start volts), the inverter's battery bank must be connected to Terminal 3 (+) and Terminal 4 (–). If autostarting based on any other condition (e.g., temperature, amps), either the inverter battery bank or the generator's battery may be used to power the AGS controller. However, the negative terminal of every battery bank must be connected together to prevent damage to the AGS (refer back to Section 2.5.1.1).*

Info: The AGS requires a DC input of 8.5 to 70 volts in order to operate the internal relays (>70 volts causes damage to the AGS and is not covered by the product warranty).

To connect the monitored battery bank to the AGS:

1. Route and connect a wire (black) from the monitored battery bank's negative terminal to Terminal 4 on the AGS.
2. Route and connect a wire (red) with a 5-amp in-line fuse from the monitored battery bank's positive terminal to Terminal 3.

2.6.2 Generator Run Sense Connection (Terminals 2 & 4)

A gen run sense signal/voltage is required as it alerts the AGS that the generator is running; which prevents another starter crank to the generator. If the gen run sense signal is not provided to the AGS, the AGS commands the generator to autostop (in case the gen is running), and then attempts another autostart sequence (up to four start attempts before a gen start fault occurs). The Gen Type switch setting (under Section 3.1) determines the required gen run sense signal/voltage that must be provided to the AGS.

- **Gen Type is 2-Wire Standby Mode*** – A fully automatic generator (can start, run and stop using only two wires) may be able to use the 2-Wire Standby setting (see Gen Type settings in Section 3.1). When using this setting, the gen run sense signal is communicated from the inverter to the AGS through the network cable. The AGS determines that the generator is running when the inverter/charger communicates that it is in a charge state (e.g., Charging, Bulk Charge, Absorb Charge).

  When using the 2-Wire Standby setting (and generator is autostarted by AGS), the generator runs and connects to the input of the inverter. This causes the inverter to begin charging, which in turn communicates to the AGS (via the network cable) that the generator is running—preventing another starter crank.

  ** Requires ME-AGS-N with Rev ≥5.2 to use 2-Wire Standby mode.*

- **Gen Type is not 2-Wire Standby Mode** – For all other Gen Type settings (other than 2-Wire Standby mode), the generator run sense must be 10 to 40 VDC—only while the generator is running. The gen run sense voltage from the generator is connected to Terminal 2 (positive) and Terminal 4 (negative) on the green 8-port terminal block on the AGS; and can be a switched B+ source from the generator, a positive signal from the generator's hour meter, or the generator's running light.

To install the generator's run sense voltage to the AGS:

1. Connect a wire (preferably not black or red) from the generator's run sense output to Terminal 2 on the 8-port terminal block.
2. Connect the negative terminal of the monitored battery bank to Terminal 4 (power negative) on the 8-port terminal block. Ensure the negative terminal on the generator battery is referenced/ connected to the negative terminal on the monitored battery.

Info: The negative terminal of the monitored battery bank must be in common with the negative side of the gen run sense signal from the generator. This ensures that the positive battery voltage (to Terminal 3) and the positive gen run sense voltage (to Terminal 2) have a common negative reference (to Terminal 4), and are correctly sensed/measured by the AGS.

What if my generator does not have a gen run sense output?
Review the alternative options (Figure 2-10) to provide this gen run sense voltage to the AGS.

Option 1 – Tap into the positive side of the generator's hour meter or running light; ensure the voltage is only 10-40 VDC while the generator is running.

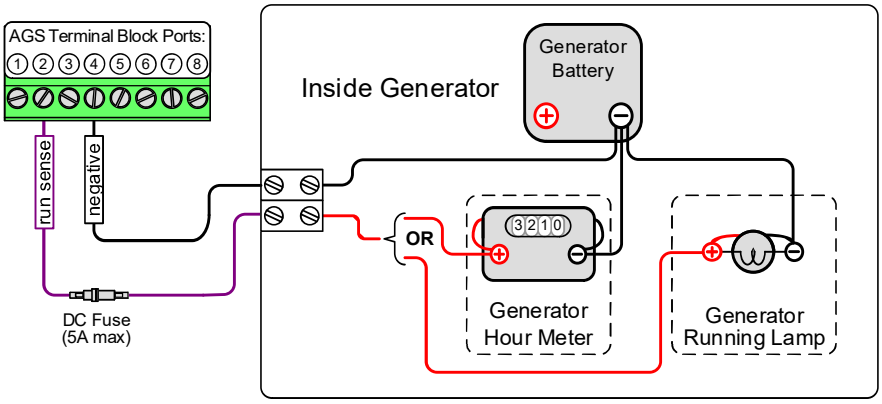

Option 2 – Use a 120 VAC to 12 VDC step-down transformer (normally used to charge power equipment batteries) and plug into the generator's 120 VAC output. The step-down transformer provides 12 VDC output only while the generator is running.

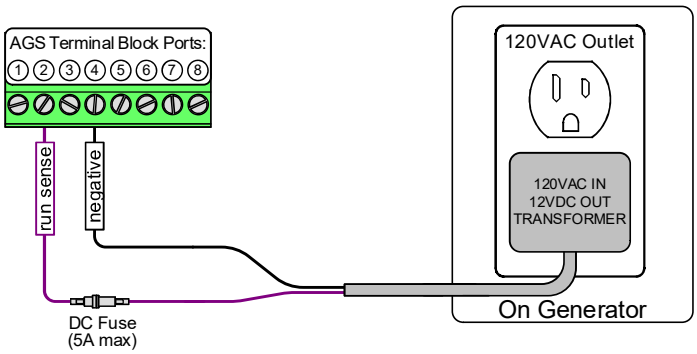

Option 3 – Use an external 120 VAC coiled relay to bring the generator's battery voltage to the AGS gen run sense terminal (Terminal #2) <u>only</u> when the generator is running. The generator's battery voltage must be 10 to 40 VDC.

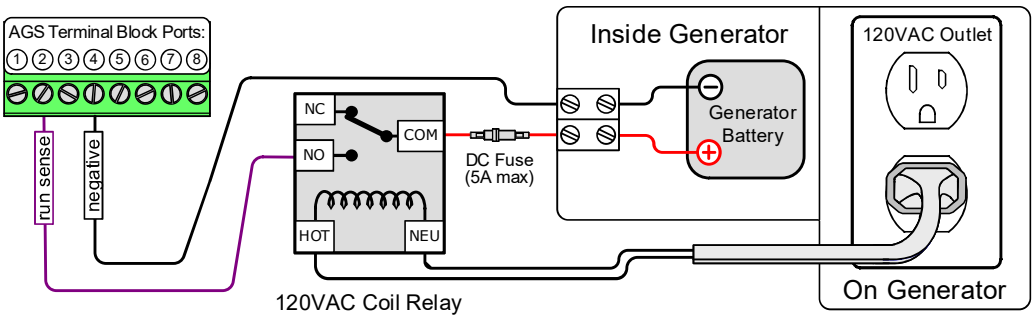

Figure 2-10, Generator Run Sense Options

2.6.3 Gen Start/Stop Connections (Terminals 1, 5, 6, 7, & 8)

This section covers the control relays inside the AGS controller, and provides information about wiring these relays to the generator's start/stop circuit. You must identify the generator's start and stop wiring requirements in order to determine: how many relays you require, the number of wires you connect, and in what combination.

When the generator is equipped with a remote control terminal or connector, it is much easier to make the connections to the AGS control relays if the generator's optional remote control is purchased. Connecting to the generator's remote also eliminates the need to make connections inside the generator (and possibly violating the generator's warranty).

The AGS controller provides three control relays (RY1, RY2, and RY3) to operate the autostart/autostop functions of your generator. These relays are dry contacts (they do not provide any voltage or current), and operate only as switches that turn low amperage devices (≤5 amps) on and off. They are not intended to directly provide power to starter motors or to ignition systems. Rather, the relays are used to send a signal to operate the coil of another higher amperage device, which does the actual switching of power.

CAUTION: A fuse rated at 5 amps or less must be used to protect each of the relays. **The warranty does not cover damage to these relays.** Fuses should be located as close as possible to the generator connection. A fuse must be used, even if the circuit is providing only a "dry contact" or "ground" connection—it will prevent damage if the connection is miswired or damaged.

Info: To set the generator type—which determines the operation of the AGS relays—see the Gen Type setting info in Section 3.1.

Info: Due to the different generator types and the various starting/stopping wiring configurations used by generator manufacturers, detailed wiring instructions are not provided in this manual. Please refer to your generator's documentation for wiring details.

Info: For more information—and to view diagrams on connecting the AGS to the start/stop circuit on many generators—go to www.Magnum-Dimensions.com.

Depending on your generator's start and stop wiring requirements, you may only need to use one relay (RY1) for fully automatic 2-wire generators; two relays (RY1 and RY2) for 3-wire generators; or all three relays (RY1, RY2, RY3) for generators that require an independent bypass or preheat circuit.

The connection points to each relay are as shown (see Figure 2-11):

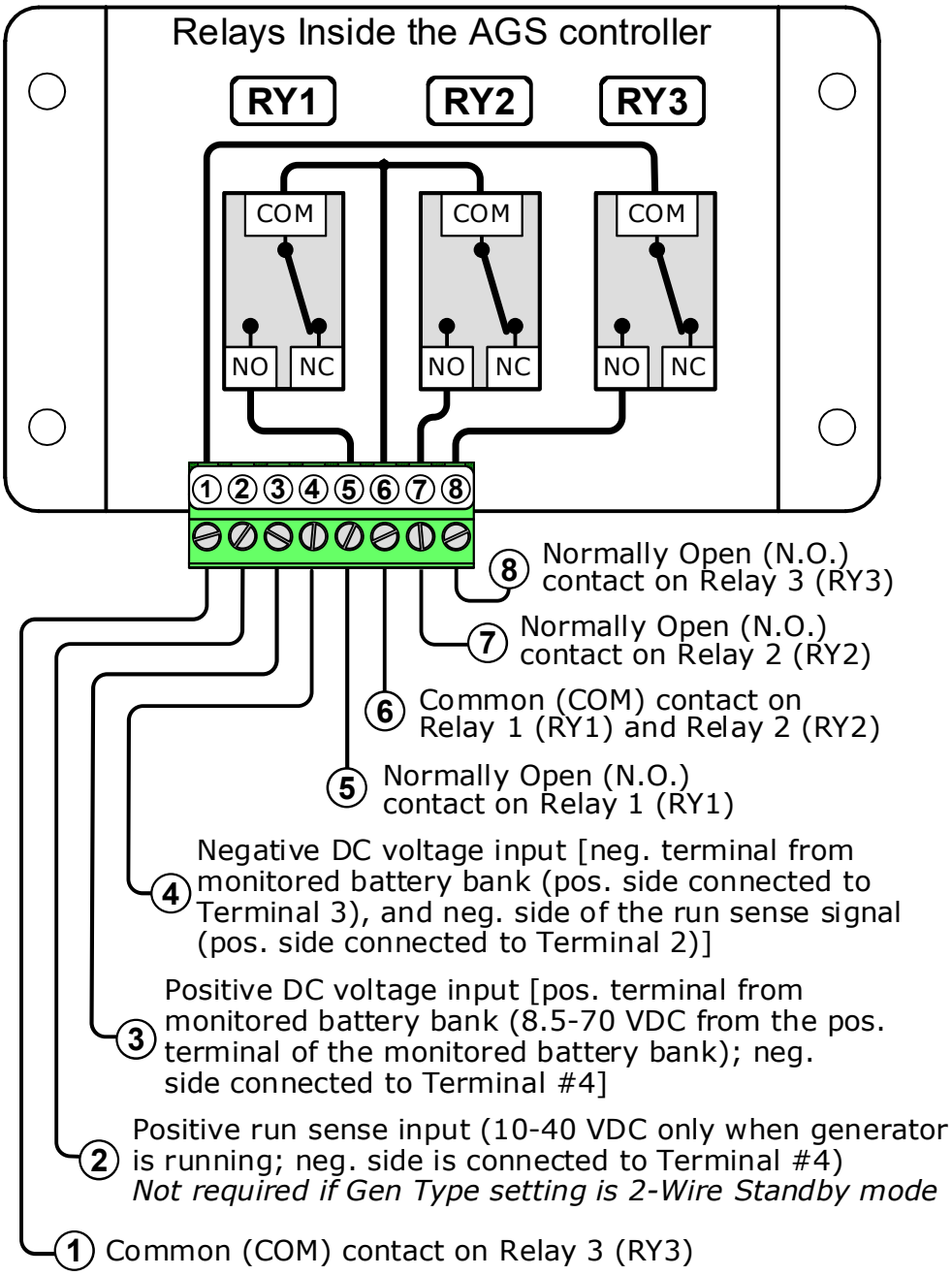

Figure 2-11, Wiring to the AGS-N's Terminal Block

2.6.4 Common Generator Wiring Diagrams

Common generator starting/run/stop circuits can be divided into three major types: 2-wire control, 3-wire momentary control, or 3-wire maintain control. Refer to the following gen wiring diagrams.

Info: The term "3-wire" refers to the minimum number of wires required to control the starter motor and to run the generator (may need more than three wires).

Two-wire control generator types: These generator types integrate the control circuits for start-up, running, and stopping (Figure 2-13). The generator starts and runs when two control wires are connected, and then stops when they are disconnected.

Three-wire momentary control generator types: These generator types use a 3-position momentary type switch that controls their operation (Figures 2-14 & 2-16). To start the generator, the switch is momentarily held in the START position. This energizes the ignition system and cranks the starter motor. Once the engine has started, the switch is released and returns to a center position (i.e., "momentary" run control). To shut down the generator, hold the switch in the STOP position until the engine dies. Once released, it returns to the center position (i.e., "momentary" stop control).

Three-wire maintain control generator types: These generator types use an automotive type starting circuit (Figure 2-15). To start the generator, turn the operating switch to a RUN position and then momentarily hold it in the START position. Once the engine starts, release the switch and it returns to the RUN position (i.e., "maintain" run control). To shut down the generator, move the switch to the OFF position (i.e., "maintain" stop control).

2.7 Warning Label

It is unsafe to perform maintenance on the generator/electrical panel if just the generator is turned off. The AGS system can automatically turn on the generator and power the panel. See Figure 2-12.

The supplied warning label informs all that an automatic generator starting device is installed in your electrical system. Place the label in a clearly visible location at the generator (ensure it is visible at the generator cabinet or at the enclosure that guards against electrical shock or moving parts hazards).

WARNING: To protect servicing personnel, ensure the generator and AGS are properly disabled (i.e., remove starting battery from generator and remove all power to the AGS by unplugging the AGS's terminal block) prior to performing maintenance on the generator or electrical panel.

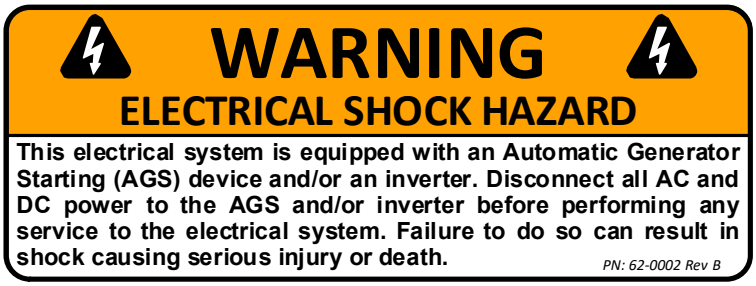

Figure 2-12, Warning Label

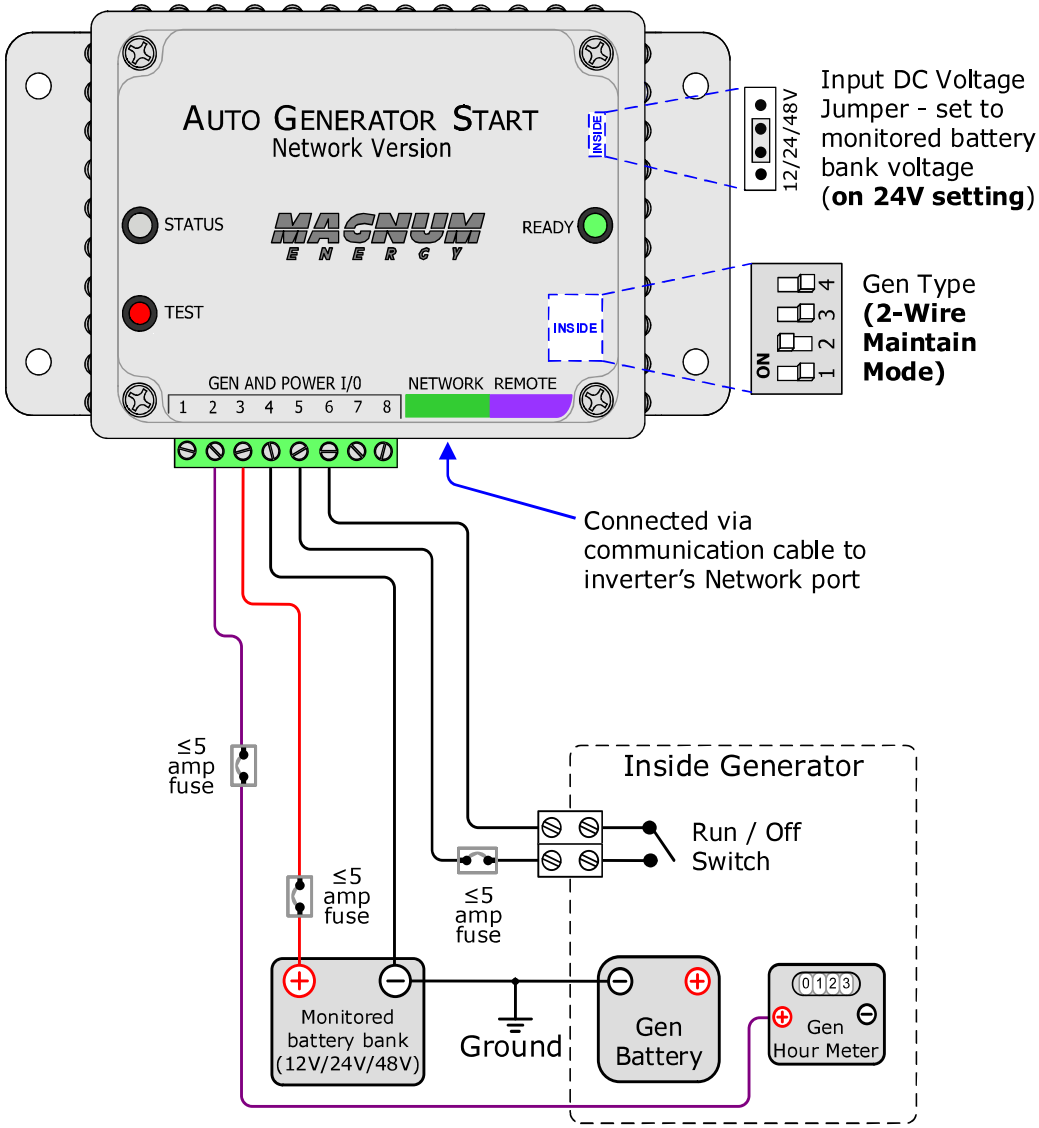

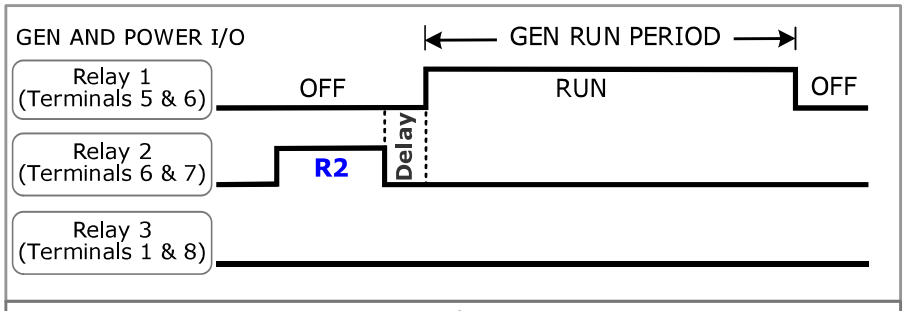

Timing Information			
R2 (Relay 2) Time	**10 sec.**	Time between start attempts	2 min.
Delay time	4 sec.	Total start attempts	4

Relay timing for Gen Type: **2-Wire Maintain Mode**

Figure 2-13, Two-wire Control

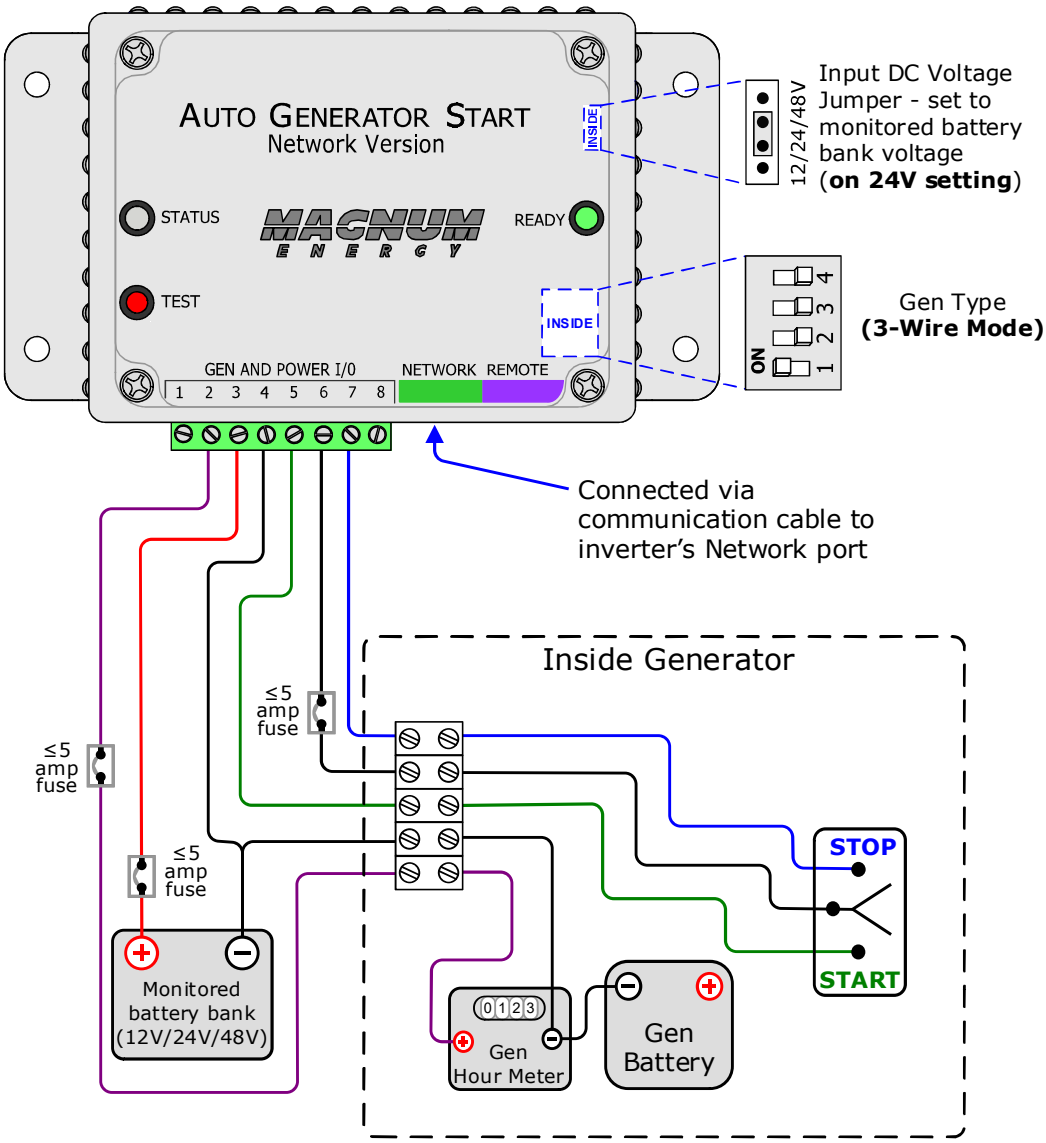

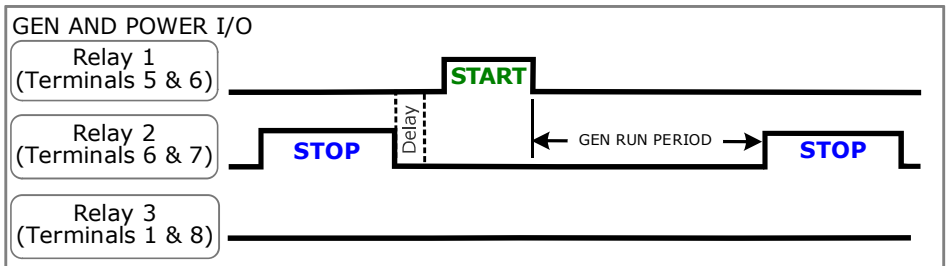

Timing Information			
STOP Time	**10 sec.**	Start Delay Time	2 sec.
START Time	**5 sec.**	Time between start attempts	2 min.

Relay timing for Gen Type: **3-Wire Mode**

Figure 2-14, Three-wire Momentary Control

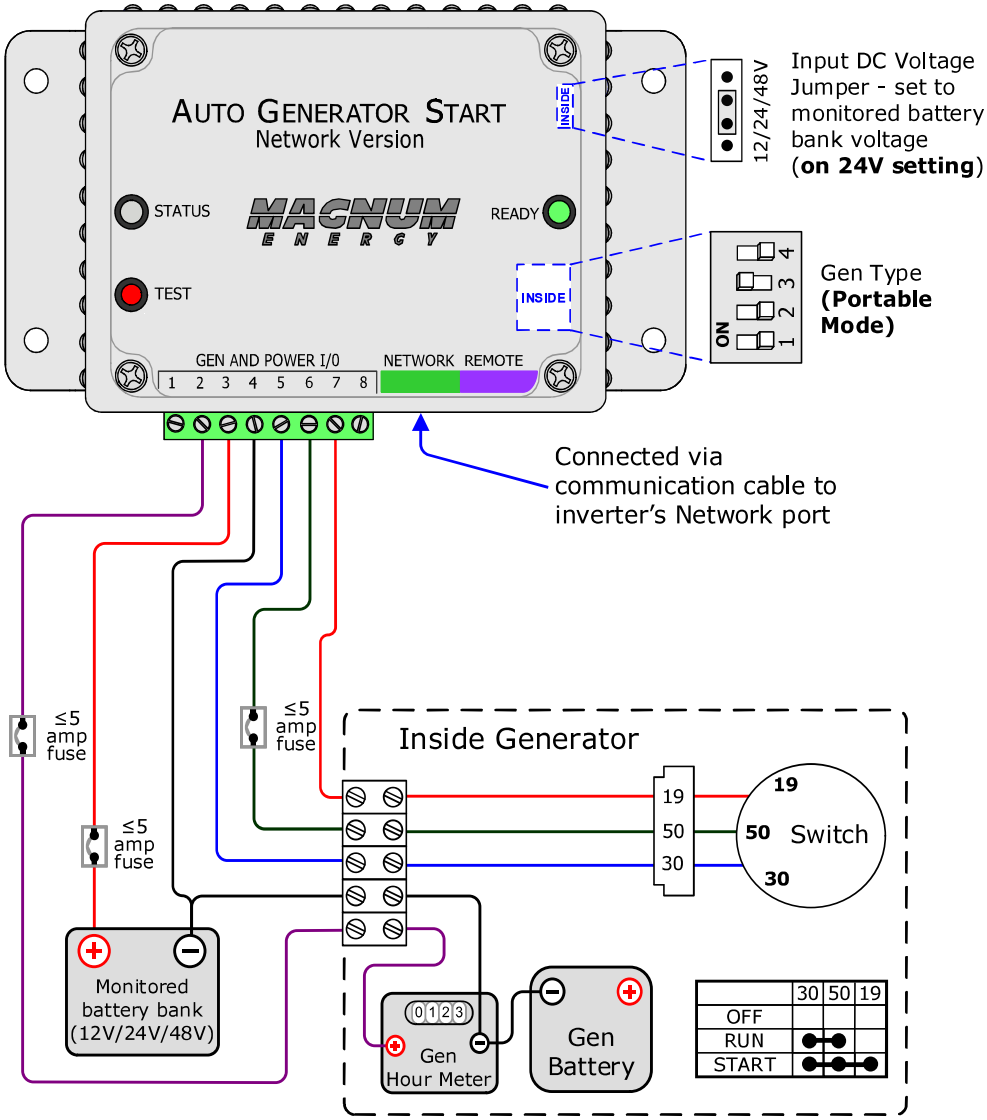

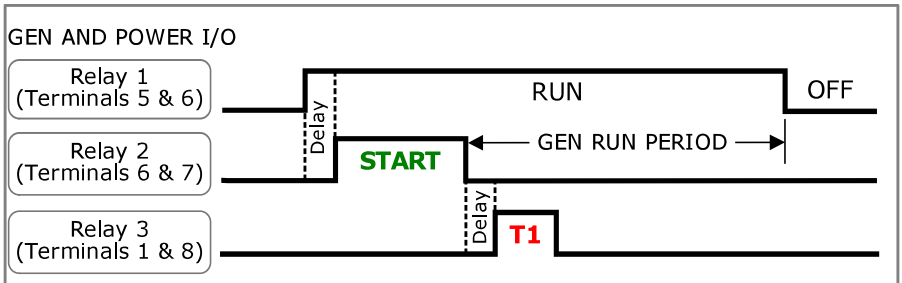

Timing Information			
START Time	**10 sec.**	Time between start attempts	2 min.
T1 Time	**5 sec.**	Total start attempts	4
Delay Time	2 sec.		

Relay timing for Gen Type: **Portable Mode**

Figure 2-15, Three-wire Maintain Control

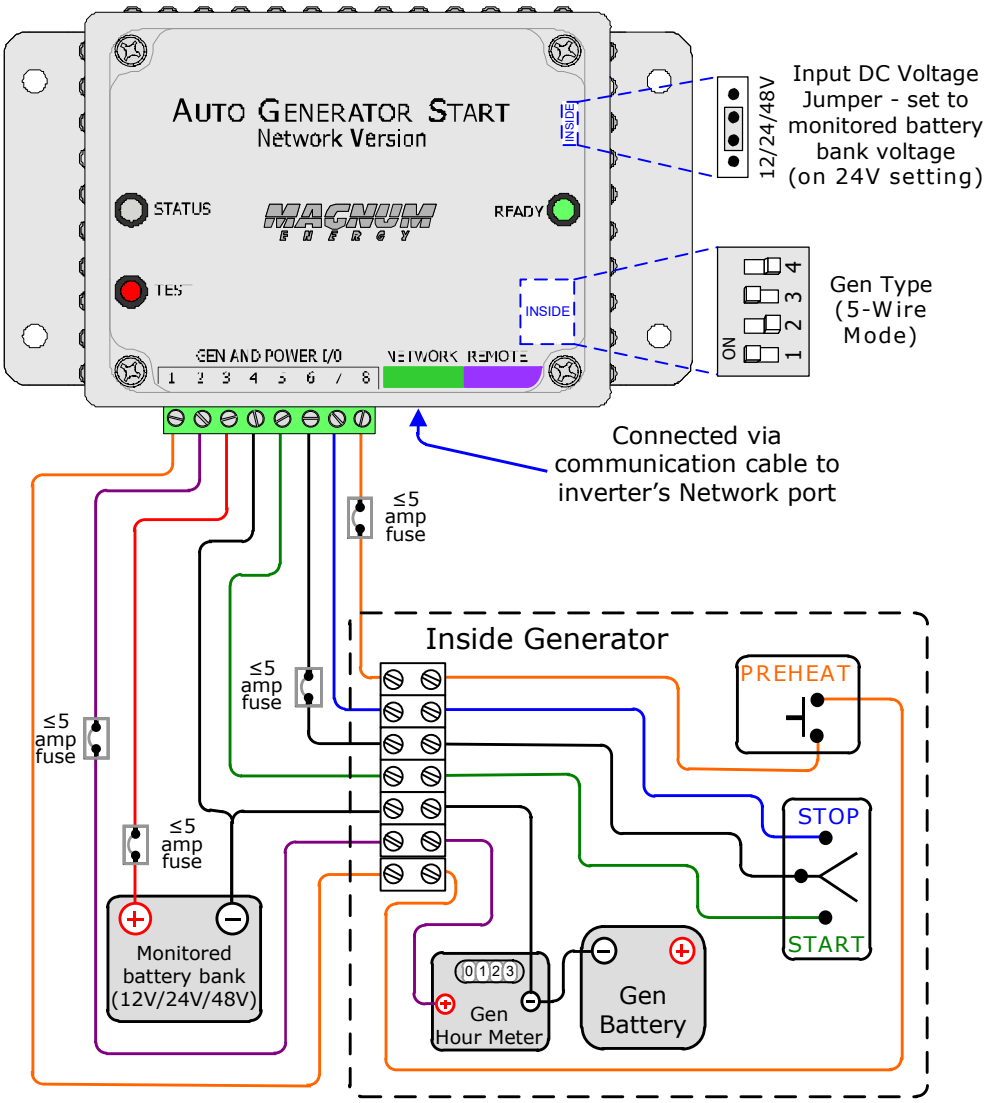

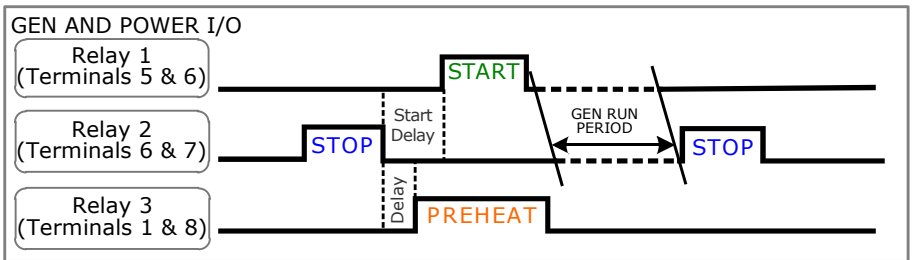

Timing Information			
STOP Time	10 sec.	Preheat delay time	4 sec.
START Time	10 sec.	Time between start attempts	2 min.
PREHEAT Time	25 sec.	Total start attempts	4
Start Delay Time	14 sec.		

Relay timing for Gen Type: 5-Wire Mode

Figure 2-16, Three-wire Momentary Control (with Preheat)

3.0 AGS-N Controller Setup

This section covers configuring the AGS's internal settings.

3.1 Configuring the Internal AGS-N Settings

Remove the AGS controller's four top screws and detach the plastic cover to access the Input DC Voltage Jumper and the 4-position DIP (Dual In-line Package) switch (Figure 3-1).

The Input DC Voltage Jumper position determines the controller's DC operating voltage. The DIP switch configuration is used to select the Gen Type—which determines how the internal relays autostart or autostop the generator.

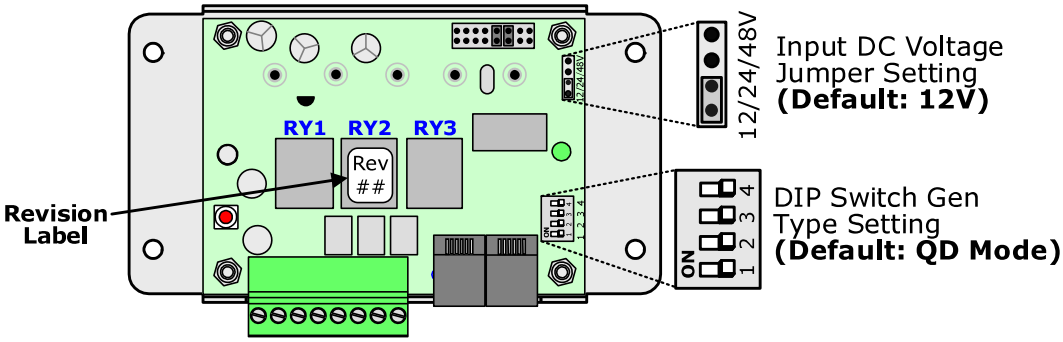

Figure 3-1, Inside the AGS-N Controller

Input DC Voltage Jumper Setting: This setting is determined by connecting two small pins with a small, black plastic box (i.e., jumper). This setting can be configured for 12/24/48 VDC operation (see below), which is determined by the nominal DC voltage connected to Terminals 3 and 4.

12 VDC Operation (jumper on bottom two pins) **default setting**

24 VDC Operation (jumper on middle two pins)

48 VDC Operation (jumper on top two pins)

DIP Switch Gen Type Setting: The Gen Type setting is determined by a DIP switch—actually four small switches that can be turned to the ON/OFF positions. The position of each of these switches determines the open/close timing sequence for the three internal AGS relays (RY1, RY2 and RY3). The multiple positions of the DIP switch allow a wide range of generator start/stop circuit configurations.

After determining the appropriate start/stop timing sequence for your generator, use Table 3-1 to determine the correct Gen Type setting for your generator's start/stop requirements.

For examples and assistance, view the generator wiring diagrams at: *www.Magnum-Dimensions.com*.

Info: This switch is shipped with a thin yellow plastic film covering. Punch through this thin film to set your gen type.

Table 3-1, Gen Type Settings

Gen Type	Relay Timing/Operation (RY1/RY2/RY3)	Time Period
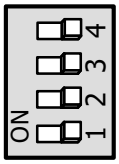 QD Mode *(default)*	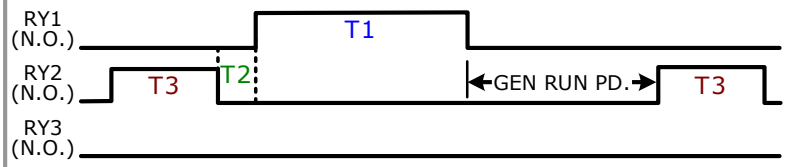 Generator: Quiet Diesel Series (Onan). HDZAA model is not compatible with the AGS-N module – damage may occur.	T1 = 20 sec. T2 = 4 sec. T3 = 10 sec.
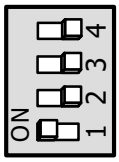 3-Wire Mode	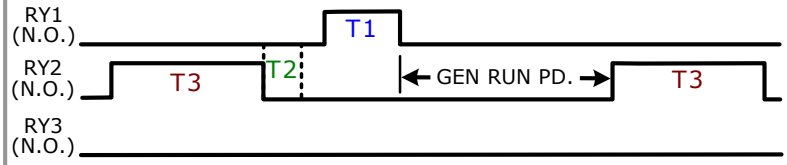 Generators: Marquis, Emerald, and Microquiet (Onan); Quiet Pack Series (Generac).	T1 = 5 sec. T2 = 2 sec. T3 = 10 sec.
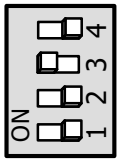 Portable Mode	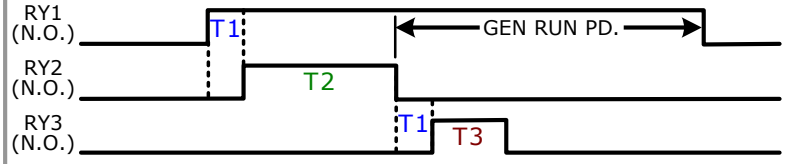 Generator: EM Series with remote control (Honda).	T1 = 2 sec. T2 = 10 sec. T3 = 5 sec.
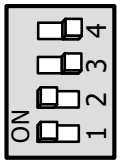 2-Wire Momentary Mode	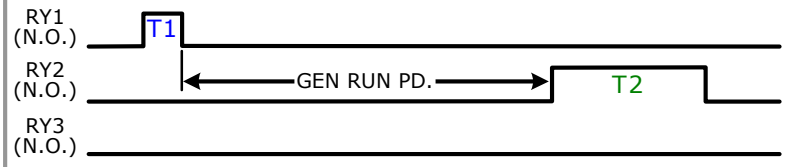 Generator: PT-ECU-63 controller with 2-wires (Powertech).	T1 = 2 sec. T2 = 10 sec.
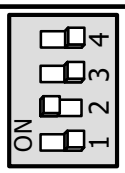 2-Wire Maintain Mode	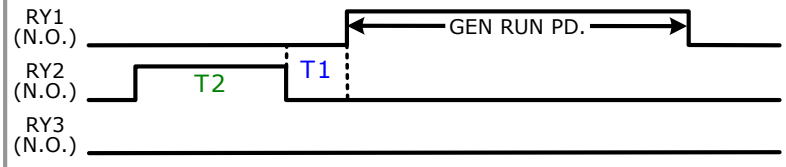 Generators: RMY Series (Kohler); DynaGen controllers.	T1 = 4 sec. T2 = 10 sec.
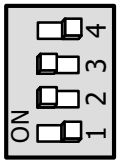 2-Wire Standby Mode*	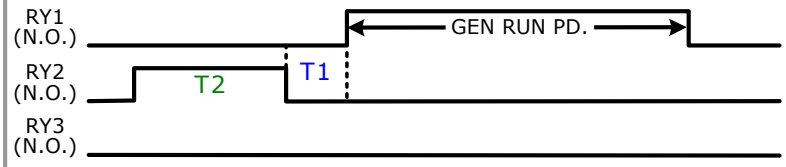 Generators: Two-wire start (does not require gen run voltage signal to Terminal #2).	T1 = 4 sec. T2 = 10 sec.
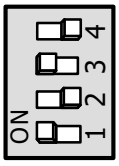 5-Wire Mode	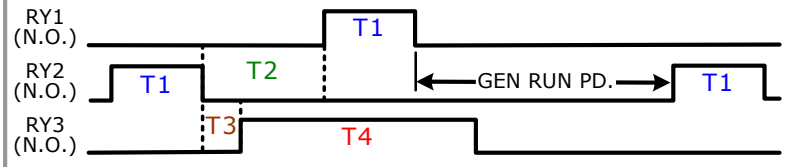 Generators: BTDA / BEG (Westerbeke), 205-DS (Martin Diesel), NL-673 (Northern Lights).	T1 = 10 sec. T2 = 14 sec. T3 = 4 sec. T4 = 25 sec.

* ME-AGS-N Revision 5.2 or higher required

4.0 AGS-N Functional Operation

After all electrical connections to the AGS, batteries, and generator have been completed (prior to reconnecting the terminal block), perform the following tests to verify that the AGS system is functioning properly and the wiring from the AGS to the generator is correct. Once the AGS controller passes the functional operation tests, refer to your remote control manual to set up the AGS for your autostart and autostop requirements.

Note: *The communications cable from the inverter to the AGS's green NETWORK port is not required in order to perform these tests—unless using the 2-wire Standby mode (Gen Type setting). When in this mode, the communications cable must be connected and the inverter must go in to Charge mode for the test to be successful.*

4.1 AGS Power-Up Test

1. Before connecting the 8-port terminal block to the AGS, use a multimeter to verify the correct polarity and confirm that the voltage to Terminal 3 (+) and Terminal 4 (–) is correct—according to the position of the input DC voltage jumper.
2. Apply power to the AGS by plugging in the green 8-port terminal block into the controller, and then verify that the green READY LED comes on and the STATUS LED flashes green once.

Info: The green READY LED comes on (solid) when the AGS is powered and the temperature sensor is connected; and flashes if the temperature sensor is not connected or detected. A connected temperature sensor is not required unless the temperature autostart feature is needed.

4.2 Generator Wiring Test

The controller has a red TEST pushbutton (Figure 4-1). It is used to confirm that all wiring from the generator to the AGS controller is correct, and the *Gen Type* setting (Table 3-1) is properly configured for your generator type. Use the steps below to initiate an automatic generator start/stop sequence.

Note: *If the generator is running from an autostart condition when the AGS controller's TEST button is pressed, the AGS turns the generator off and initiates an automatic generator start/stop test sequence (running 30 to 60 seconds)—attempting up to 4 autostart attempts if needed.*

1. Press and release the red TEST button on the AGS.
2. The STATUS LED on the AGS controller begins to flash green, and the generator should start (a flashing green STATUS LED means the AGS has initiated an auto generator start/stop sequence).
3. Once the generator starts, view the STATUS LED and ensure it turns solid green (this means the generator has started successfully and is providing the gen run sense signal to the AGS controller[1]).

Note[1]: *The gen run sense signal from the gen to Terminal 2 on the AGS is not required when using the 2-Wire Standby Mode (Gen Type setting).*

The generator should run for approximately 30-60 seconds before automatically turning off (ensure it does not try to restart within the next two minutes).

Note: *If the generator attempts to start but does not run, continue to wait, the AGS will attempt to start the generator 3 more times.*

If your AGS/generator system passes all steps (may attempt an autostart x4), then the wiring from the AGS to the generator is correct. Set up and activate the AGS using your remote control.

Info: If after 4 attempts the generator fails to start, the STATUS LED turns red—indicating a fault. See Section 5.0.

4.3 AGS-N Controller LED Indicators

The controller has two LED indicators for viewing system operation.

4.3.1 STATUS LED Indicator

Flashing Green: Indicates the AGS system is initiating a generator start sequence. This happens when the AGS's TEST button has been pressed and released, or a remote control AGS setting has autostarted the generator.

Solid Green: Indicates the generator has started successfully and is providing the gen run sense signal/voltage to the AGS controller.

Solid Red: Indicates a fault condition in which the generator either has not started, or has not provided the correct run gen sense signal/voltage to the AGS controller—after four start attempts.

4.3.2 READY LED Indicator

Solid Green: Indicates the AGS controller has power and the temperature sensor cable is detected. This indicates normal AGS system operation.

Flashing Green: Indicates AGS controller has power, but the temp sensor is not detected. This can mean the temperature sensor cable is either not connected, incorrectly connected, or is defective.

Note: *The temperature sensor is not required to be connected unless the temperature autostart feature is needed.*

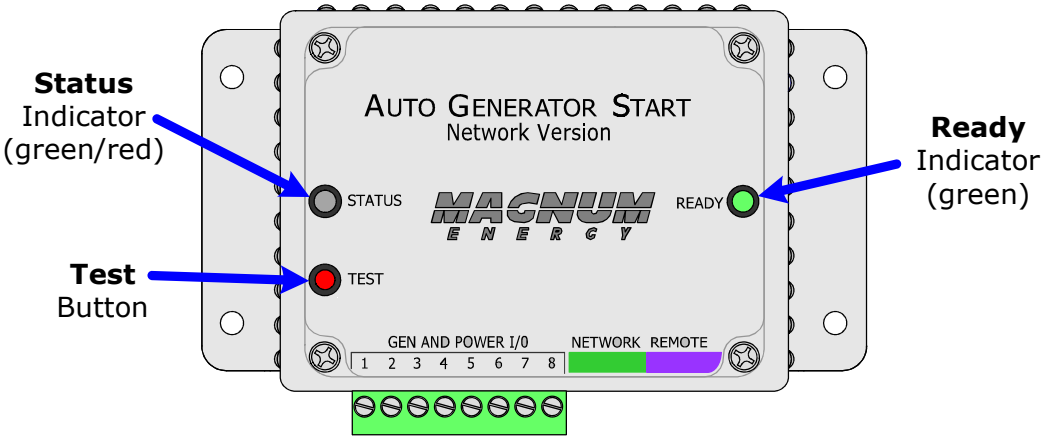

Figure 4-1, AGS–N Front Panel Controls and Indicators

5.0 AGS-N Controller Troubleshooting

5.1 Using the AGS-N's LED Indicators

The AGS's two LEDs can assist you with troubleshooting the AGS system. The STATUS LED is bi-color (green or red) and indicates the AGS's operational status. The READY LED is green, and illuminates if the AGS has power and the remote temp sensor is connected.

The AGS controller performs a "self test" when power is first applied (see functional operation tests in Section 4.0). If the generator does not start and stop as expected, refer to Table 5-1 below.

WARNING: To be safe, unplug the green 8-port terminal block from the ME-AGS-N before performing maintenance on the electrical or generator system.

Table 5-1, AGS-N Controller Troubleshooting Guide

LED	SYMPTOM	SOLUTION
STATUS solid red = Gen fault	1) Gen won't start; or 2) Gen won't run. It starts, but is stopped by the AGS (B+ or gen run sense voltage not sensed to Terminal 2).	Check generator to AGS start wiring; or, check B+ wiring from generator to AGS. Measure DC voltage from Terminal 2 (+) to Terminal 4 (–), ensure DC voltage is 10-40 volts only when the generator is running.
STATUS flashes green = Gen start initiated	Gen start initiated.	No problem – normal operation.
STATUS solid green = Gen run	Gen is running.	No problem – normal operation.
READY LED off = No power connected to the AGS	DC voltage to Terminals 3 (+) and 4 (–) on controller missing or incorrect.	1) Check battery voltage. 2) Check fuse. 3) Check DC wiring.
READY flashes green = Temp sensor not detected ***Note:*** *Connect temp sensor if temp autostart feature needed.*	The temp sensor is not sensed or plugged into the purple REMOTE port.	1) Check the temp sensor cable and its connection to the purple REMOTE port, or 2) Check the temp sensor cable for any damage. 3) Replace temp sensor cable.
READY solid green = Power & temp sensor connected	The temp sensor is connected to the purple REMOTE port.	No problem – normal operation.

5.2 Generator Starting/Running Troubleshooting

This section helps troubleshoot the generator system when the AGS's STATUS LED illuminates solid red (fault condition), or the remote control displays a generator autostart fault.

- Press the TEST button on the AGS controller, or start the generator from your remote control.

5.2.1 If the Generator does not Start or Run

If the generator does not start after pressing the AGS's TEST button:

1. Ensure the green READY indicator on the AGS controller is on (flashing or solid) to indicate that the AGS is getting power.
2. Check the generator for fuel or for any fault codes, or check the generator's operating manual for troubleshooting tips.
3. Ensure the start/stop wiring has not come loose and is correctly connected for your generator model. A wiring diagram for your particular brand and model of generator may be available, check our website: *www.Magnum-Dimensions.com*.
4. Your generator may require a higher amperage start signal than what our AGS relays are rated (approximately 5 amps); in that case, you need to supply a higher-rated external relay.
5. If the generator tries to start as soon as you initiate a test (instead of waiting for the initial stop signal before attempting to start), check the start and stop wire connections (reversed?).
6. Remove the generator start/stop wires from the AGS's 8–port terminal. Simulate the AGS relays by physically connecting the start wires first to ensure the generator starts and runs. Then, connect the stop wires and ensure the generator stops. If the generator does not start or stop as it should, recheck and troubleshoot the start/stop wiring to the generator.

5.2.2 If the STATUS LED does not go Solid

If the generator is running, but the STATUS LED on the AGS controller is not on solid, then:

1. Ensure the AGS is not in warm-up (STATUS LED should go solid once the warm-up period is over).
2. Confirm you are getting the correct gen run sense signal based on your *Gen Type* setting.

Info: Refer to the Gen Type Setting section (page 21) and Table 3-1 (page 22) to determine your *Gen Type* setting.

- **Gen Type is 2-Wire Standby Mode** – When using 2-Wire Standby mode, the gen run sense signal is communicated from the remote control to the AGS through the remote control cable. The AGS determines that the generator is running when the remote communicates that it is in a charge state (e.g., Charging, Bulk Charge, Absorb Charge).

  Note: *In order to perform the 2-Wire Standby mode tests: the remote control must be connected to the inverter, and the green Network port on the inverter must be connected with the communications cable to the green NETWORK port on the AGS.*

  1. Ensure the remote control is in a charge state (e.g., Charging, Bulk Charge, Absorb Charge). If not, then:

     a) Ensure generator's AC output connected to inverter's AC input. Check wiring/AC breaker to inverter's AC input.

     b) Ensure the AC input breaker on the inverter has not popped out/opened up.
  2. Ensure the network (Section 2.4.2) and remote cables are the correct type (see your remote's operating manual).

- **Gen Type is not 2-Wire Standby Mode** – All gen types (except 2-Wire Standby mode) use DC voltage as the gen run sense signal to the AGS. While the generator is running, use a DC voltmeter to confirm there is 10 to 40 VDC between Terminals 2 (+) and 4 (–) on the AGS's green 8-port terminal.

  Note: *These tests can be performed without either a remote control connected to the inverter, or the network communications cable connected from the inverter to the AGS's green NETWORK port.*

  A) Use a DC voltmeter to ensure you have a 10-40 VDC reading between Terminals 2 and 4 while the generator is running. Shut the generator down, and then recheck voltage to confirm it has gone away with the generator being off.

  1. If the voltage is correct and goes away when the generator is off, then the gen run sense signal is correct. Proceed to the remote control section to set up and enable the AGS to autostart your generator.
  2. If the voltage is still present with the generator off, then it is not a correct gen run sense signal. Determine where it is coming from and remove or correct it using the gen run sense signal (voltage) options found in Section 2.6.2.

  B) If the DC voltage is incorrect or missing between Terminals 2 and 4:

  1. Check the fuse and wiring to Terminal 2. The wire on Terminal 2 may be loose, you may have a blown fuse, or the other end of the wire may not be connected to a proper run signal like the Gen Hour Meter or one of our alternate gen run sense signal (voltage) options found in Section 2.6.2.

2. Ensure the negative terminal of the monitored battery bank***** is in common/connected with the negative side of the generator battery. This ensures that the positive battery voltage (to Terminal 3) and the positive generator run sense voltage from the generator (to Terminal 2) have a common negative reference (to Terminal 4), and are correctly sensed/measured by the AGS.

****** *Monitored Battery Bank – When autostarting the generator based on battery voltage (e.g., start VDC), the inverter's battery bank must be connected to Terminals 3 (positive) and 4 (negative). If autostarting based on any other condition (e.g., temperature, amps), either the inverter battery bank or the generator's battery may be used to power the AGS controller. However, if different battery banks (inverter and generator) are used, the negative terminal of each battery bank must be connected together to prevent damage to the AGS (see Section 2.5.1.1).*

6.0 Appendix

6.1 Other Accessories and Equipment

DMX Power offers a number of devices and accessories that can be used to expand and enhance your AGS and inverter/charger system.

6.1.1 Optional Accessories for the AGS-N

AGS Pigtail Adapters

DMX Power offers two pigtail adapters for use with the AGS. They are used in applications that require you to automatically turn the generator on/off externally via a manually controlled switch, or from an automatically controlled switching device (i.e., using the A/C's thermostat controls to turn on the generator in order to run the A/C unit, or a relay control circuit):

- **ME-PT1** (pigtail one-wire) adapter allows the AGS to start the generator when an external +12-volt DC supply is applied.
- **ME-PT2** (pigtail two-wire) adapter allows the AGS to start the generator by an external two-contact switch.

Battery Monitor

The Battery Monitor Kit (ME-BMK) is a single battery bank AH meter that monitors the condition of the battery and provides information on much energy you have available. It also enables you to plan your electrical usage to ensure the battery is not being over-discharged.

MagWeb (device monitoring through the Internet)

The ME-MW-W (MagWeb Wireless) and the ME-MW-E (MagWeb Wired Ethernet) are used to remotely monitor inverters and accessories. The ME-MW-W connects to the DMX Power network via a wireless data link and the ME-MW-E connects via a wired Ethernet data link. Both provide live internet monitoring of the inverter, battery monitor, and the AGS. Using an "always on" internet connection, the MagWeb system makes live and historical conditions available using a web browser and DMX Power's data transfer service.

Magnum Enclosures

The MP enclosures have been specifically designed to combine MS-PAE inverters when configured for parallel operation. The MP enclosures feature convenient front-mounted AC and DC connections and easy panel operation using the optional ME-RTR router. The MMP enclosures are for single inverter applications. The MMP Series enclosures have been specially designed to combine all of the major components required for a renewable energy system into a single, easy to install pre-wired enclosure.

6.2 AGS Revisions and Inverter Compatibility

When an AGS is released with a new software revision, some of the features/functionality in the new AGS may not be available in an inverter or remote control with an earlier software version. Refer to your remote owner's manual to see what features are available.

MAGNUM ENERGY

DMX POWER

64-0039 F Owner’s Manual, ME-AGS-N