MAGNUM ENERGY

MS-PAE Series

Pure Sine Wave Inverter/Charger

Owner's Manual

DMX POWER

Disclaimer of Liability

The use of this manual and the conditions or methods of installation, operation, use, and maintenance of the MS-PAE Series inverter/charger is beyond the control of DMX Power. Therefore, this company does not assume responsibility and expressly disclaims liability for loss, damage, or expense whether direct, indirect, consequential or incidental that may arise out of or be any way connected with such installation, operation, use, or maintenance.

Due to continuous improvements and product updates, the images shown in this manual may not exactly match the unit purchased.

Restrictions on Use

The MS-PAE Series inverter/charger may only be used in life support devices and systems with the express written approval of DMX Power. Failure of this inverter can reasonably be expected to cause failure of that life support device or system, or to affect the safety or effectiveness of that device or system. If the MS-PAE Series inverter/charger fails, it is reasonable to assume the health of the user or other persons may be endangered.

Copyright Notice

Copyright 2026 by DMX Power. All rights reserved. Permission to copy, distribute, and/or modify this document is prohibited without express written permission from DMX Power.

Document Information

Description – MS-PAE Series Owner's Manual
Part Number and Revision – 64-0032 Rev E
Date Published – July 2026

For the latest version of DMX documentation including this manual see the documentation menu on our website at: www.dmx-power.com

Contact Information

DMX Power
Phone (Toll-Free): 800-553-6418 or 651-653-7000
Technical Questions: support@dmx-power.com
Warranty or RMA: warranty@dmx-power.com
Web: www.dmx-power.com

Statement of Appreciation

Thank you from all of us at DMX Power for purchasing this MS-PAE Series inverter/charger.

At DMX Power, we are committed to providing you with quality products and services, and hope that your experience with us is pleasant and professional.

Record the MS-PAE's model and serial number in case you need to provide this information in the future.		
Model:		**Serial Number:**
☐	MS4024PAE	
☐	MS4448PAE	

IMPORTANT PRODUCT SAFETY INFORMATION
SAVE THESE INSTRUCTIONS

THIS MANUAL CONTAINS IMPORTANT INSTRUCTIONS FOR THE MS-PAE SERIES INVERTER/CHARGER THAT MUST BE FOLLOWED DURING THE INSTALLATION AND OPERATION OF THIS PRODUCT. Before using the MS-PAE Series inverter/charger, read all instructions and cautionary markings. Also, be sure to review the individual manuals provided for each component of your system. The installation instructions are for use by qualified personnel only. Do not perform any installation or servicing other than that specified in this owner's manual unless you are qualified to do so. Incorrect installation or servicing may result in a risk of electric shock, fire, or other safety hazard.

Safety Precautions

- All electrical work must be performed in accordance with local and national electrical codes.
- This product is designed for indoor/compartment installation. It must not be exposed to rain, snow, moisture, or liquids of any type.
- Use insulated tools to reduce the chance of electrical shock or accidental short circuits.
- There are no user-serviceable parts contained in this product.
- This unit is provided with integral protection against overloads.
- Live power may be present at more than one point since an inverter utilizes both DC (batteries, PV, etc.,) and AC (utility or generator) power. To reduce risk of electric shock, ensure all DC and AC wiring is disconnected prior to installing or performing maintenance on the inverter. Turning off the inverter will not reduce this risk, the inverter must be totally disconnected from all sources.
- Use Class 1 wiring methods for field wiring connections to terminals of a Class 2 circuit.
- Listed or labeled equipment shall be installed and used in accordance with any instructions included in the listing or labeling.
- Always verify proper wiring prior to starting the inverter.
- Use only copper wires with a minimum temperature rating of 90°C (194°F).
- AC wiring must be no less than 10 AWG (5.3 mm²) gauge copper wire.
- Battery cables should be no less than #4/0 AWG (107.2 mm²) for 24-volt systems and no less than #2/0 AWG (67.4 mm²) for 48-volt systems. Crimped and sealed copper ring terminal lugs with a 5/16 hole should be used to connect to the DC terminals on the inverter.
- Torque all AC wiring connections and DC cable connections to the required torque values.
- The inverter must be properly mounted, see Section 2.1.4 "Mounting the Inverter" in this manual.
- Overcurrent protection for the battery supply is <u>not</u> provided as an integral part of this inverter. Overcurrent protection of the battery cables <u>must</u> be provided as part of the system installation. Refer to Section 2.2 "DC Wiring" for more information.
- Overcurrent protection for the AC output wiring is <u>not</u> provided as an integral part of this inverter. Overcurrent protection of the AC output wiring <u>must</u> be provided as part of the system installation. Refer to Section 2.3 "AC Wiring" for more information.
- The AC output neutral conductor and the DC negative conductors are <u>not</u> connected (bonded) to the inverter chassis. Both the input and output conductors are isolated from the enclosure and each other. System grounding, if required, is the responsibility of the system installer and must comply with local and national electrical codes and standards. Refer to the Section 2.4 "Grounding Inverters" for more information.

Battery Safety

- Use insulated tools and be very careful when working around batteries, they can produce extremely high currents if short-circuited (e.g., dropping a metal tool across the battery terminal), which could cause a fire or explosion.
- Read and follow the battery manufacturer's safety precautions before installing the inverter and batteries. Always verify proper polarity and voltage before connecting the batteries to the inverter. Once the batteries are connected to the inverter, ensure the maintenance and charging requirements (i.e., charge voltage and charge rate) provided by the battery manufacturer are followed to extend the life of the batteries and to prevent damage to the batteries while charging.
- Wear eye protection such as safety glasses, and avoid touching your eyes and face when working with batteries to keep any fluid/corrosion on the battery from coming in contact with eyes and skin. Have plenty of fresh water and soap nearby and thoroughly wash in case battery acid contacts skin, clothing, or eyes. In the event of exposure to the eyes, flood them for at least 15 minutes with running water and seek immediate medical attention. Baking soda neutralizes lead acid battery electrolyte and vinegar neutralizes spilled NiCad and NiFe battery electrolyte; depending on your battery type, keep a supply on hand near the batteries.
- Remove all jewelry such as rings, watches, bracelets, etc., when installing or performing maintenance on the batteries and inverter. A battery can produce a short-circuit current high enough to weld metal jewelry, causing severe burns.
- Never work alone. Always have someone within the range of your voice or close enough to come to your aid when working around batteries.
- Use proper lifting techniques when working with batteries.
- Never use old or untested batteries. Check each battery's label for age, type, and date code to ensure all batteries are identical.
- Batteries are sensitive to changes in temperature. Install batteries in a stable environment.
- Batteries can produce explosive gasses, so install batteries in a well-ventilated area. For compartment or enclosure installations, always vent batteries from the highest point to the outside. Design the battery enclosure to prevent accumulation and concentration of hydrogen gas in "pockets" at the top of the compartment.
- Provide at least one inch of air space between batteries to provide optimum cooling.
- Never smoke or allow a spark near batteries.
- To prevent a spark at the battery and reduce the chance of explosion, always connect the cables to the batteries first. Then connect the cables to the inverter.
- Never charge a frozen battery.
- The battery bank should be installed in a clean, dry, ventilated environment where they are protected from high and low temperatures. If installed in a vehicle/boat, the batteries must be mounted upright (if using liquid batteries) and securely fastened. The location must be fully accessible and protected from exposure to heat producing devices, and away from any fuel tanks.

Safety Symbols

To reduce the risk of electrical shock, fire, or other safety hazard, the following safety symbols have been placed throughout this manual to indicate dangerous and important safety instructions.

WARNING: This symbol indicates that failure to take a specified action could result in physical harm to the user.

CAUTION: This symbol indicates that failure to take a specified action could result in damage to the equipment.

Info: This symbol indicates information that emphasizes or supplements important points of the main text.

CONSIGNES DE SÉCURITÉ IMPORTANTES
CONSERVER CES INSTRUCTIONS

CE MANUEL CONTIENT DE IMPORTANTES POUR LA SÉRIE MS ONDULEUR/CHARGEUR QUI DOIVENT ETRE SUIVIES PENDANT L'INSTALLATION ET FONCTIONNEMENT DE CE PRODUIT. Avant d'utiliser la série MS, lire toutes les instructions etles mises en garde. Aussi, n'oubliez pas depasser en revue les différents manuels fournispour chaque composant du système. Lesinstructions d'installation sont pour une utilisationpar du personnel qualifié. Ne pas effectuer une installation ou d'entretien autres que ceux spécifiés dans ce manuel, sauf si vous êtes qualifié pour le faire. Une mauvaise installation ou d'entretien peut entraîner un risque de choc électrique, un incendie ou autre danger pour la sécurité.

Consignes de Sécurité

- Tous les travaux électriques doivent être effectués en conformité avec les codes locaux et nationaux électriques.
- Ce produit est conçu pour l'installation / du compartiment intérieur. Il ne doit pas être exposé à la pluie, la neige, l'humidité ou des liquides de tout type.
- Utiliser des outils isolés pour réduire le risque de choc électrique ou courts-circuits accidentels.
- Il n'y a pas réparable par l'utilisateur contenues dans ce produit.
- Cet appareil est fourni avec une protection intégrale contre les surcharges.
- Puissance en direct peuvent être présents à plus d'un point depuis un onduleur utilise à la fois DC (piles, PV, etc) et AC (utilitaire ou générateur) d'alimentation. Pour réduire le risque de choc électrique, assurez-vous que tout le câblage DC et AC est débranchée avant l'installation ou la maintenance sur le variateur. Mise hors tension de l'onduleur ne réduira pas ce risque, l'onduleur doit être totalement déconnectée de toutes les sources.
- Utiliser des méthodes de câblage classe 1 pour les connexions de câblage sur le terrain aux bornes d'un circuit de Classe 2.
- Coté ou étiquetés équipement doit être installé et utilisé conformément aux instructions figurant dans la liste ou l'étiquetage.
- Toujours vérifier le câblage avant de commencer l'onduleur.
- Utilisez des fils de cuivre seulement avec une cote de température minimale de 90°C (194°F).
- AC câblage ne doit pas être inférieure à 10 AWG (5.3 mm²) de cuivre de calibre.
- Les câbles de batterie ne doit pas moins de 107.2 mm² (#4/0 AWG) pour 24 volts systèmes et pas moins de 67.4 mm² (#2/0 AWG) pour 48 volts systèmes. Frisées et scellé cosses en cuivre anneau des bornes avec un trou de 5/16 doit être utilisé pour se connecter à des bornes de courant continu sur l'onduleur.
- Couple toutes les connexions de câblage ca et les connexions de câbles à courant continu à des valeurs de couple nécessaires.
- L'onduleur doit être monté correctement, voir la section 2.1.4 "Montage de l'onduleur" dans ce manuel.
- Protection contre les surintensités pour l'alimentation de la batterie ne est pas fourni en tant que partie intégrante de cet onduleur. La protection contre les surintensités des câbles de batterie doit être fournie dans le cadre de l'installation du système. Reportez-vous à la section 2.2 "Câblage DC" pour plus d'informations.
- Protection contre les surintensités pour le câblage de sortie AC n'est pas fourni en tant que partie intégrante de cet onduleur. Protection contre les surintensités du câblage de sortie CA doit être fournie dans le cadre de l'installation du système. Reportez-vous à la Section 2.3 "Câblage CA" dans le chapitre d'installation pour plus d'informations.
- Le conducteur de sortie CA conducteurs neutre et continue négative ne sont pas connectés (servitude) au châssis inverseur. La fois l'entrée et des conducteurs de sortie sont isolés de l'enceinte et l'autre. La terre du système, si nécessaire, est de la responsabilité de l'installateur du système et doit se conformer à des codes locaux et nationaux et les normes électriques. Reportez-vous à la Section 2.4 Mise à la terre Onduleurs dans le chapitre d'installation pour plus d'informations.

Sécurité de la Batterie

- Utiliser des outils isolés et être très prudent lorsque vous travaillez près des batteries, elles peuvent produire des courants extrêmement élevés si en court-circuit (par exemple, échapper un outil métallique à travers la borne de la batterie), ce qui pourrait provoquer un incendie ou une explosion.
- Lisez et suivez les consignes de sécurité du fabricant de la batterie avant d'installer l'onduleur et des batteries. Toujours vérifier la polarité et la tension avant de brancher les batteries à l'onduleur. Une fois que les batteries sont connectées à l'onduleur, assurer la maintenance et les exigences de charge (c.-à-tension de charge et taux de charge) fournis par le fabricant de la batterie sont suivies pour prolonger la vie des batteries et pour éviter d'endommager les batteries pendant la charge.
- Porter des lunettes de protection tels que des lunettes de sécurité, et évitez de toucher vos yeux et le visage lorsque l'on travaille avec des piles de garder tout fluide / corrosion sur la batterie d'entrer en contact avec les yeux et la peau. Ayez suffisamment d'eau fraîche et de savon à proximité et se laver dans le cas d'acide contact avec la peau de la batterie, les vêtements ou les yeux. Dans le cas d'exposition pour les yeux, les inonder pendant au moins 15 minutes à l'eau courante et consulter immédiatement un médecin.Le bicarbonate de soude neutralise l'acide de plomb électrolyte de la batterie et le vinaigre neutralise renversé NiCad et NiFe batterie à électrolyte; en fonction de votre type de batterie, gardez sous la main près des batteries.
- Enlevez tous les bijoux tels que bagues, montres, bracelets, etc, lors de l'installation ou la maintenance sur les batteries et l'onduleur. Une batterie peut produire un court-circuit assez de courant élevé pour souder les bijoux en métal, provoquant de graves brûlures.
- Ne jamais travailler seul. Toujours avoir quelqu'un au sein de la gamme de votre voix ou suffisamment près pour vous venir en aide lorsque vous travaillez près des batteries.
- Utiliser des techniques de levage appropriées lorsque vous travaillez avec des piles.
- Ne jamais utiliser de piles usagées ou non testés. Vérifiez l'étiquette de chaque batterie à l'âge, le type et le code de date afin d'assurer toutes les batteries sont identiques.
- Piles sensibles aux changements temporaires, installer dans un environnement stable.
- Les batteries peuvent produire des gaz explosifs, etc installer les piles dans un endroit bien ventilé. Pour les installations compartiment ou une enceinte, toujours évacuer les piles du plus haut point à l'extérieur. Concevoir le boîtier de piles pour éviter l'accumulation et la concentration de gaz d'hydrogène dans "poches" en haut du compartiment.
- Fournir au moins un pouce de l'espace aérien entre les batteries pour fournir un refroidissement optimal.
- Ne jamais fumer ou laisser une étincelle près des batteries.
- Pour éviter une étincelle à la batterie et de réduire le risque d'explosion, toujours connecter les câbles aux batteries en premier. Ensuite, connectez les câbles à l'onduleur.
- Ne jamais charger une batterie gelée.
- La banque de la batterie doit être installé dans un endroit propre, sec, aéré et où ils sont protégés contre les températures élevées et basses. S'il est installé dans un véhicule / bateau, les batteries doivent être monté en position verticale (si vous utilisez des piles liquides) et solidement fixés. L'emplacement doit être pleinement accessible et protégé contre l'exposition à la chaleur la fabrication de dispositifs, et loin de toute réservoirs de carburant.

Symboles de Sécurité

Les symboles de sécurité suivants ont été placéstout au long de ce manuel pour indiquer des conditions dangereuses et les consignes de sécurité importantes.

AVERTISSEMENT: Ce symbole indique que le défaut de prendre une action spécifiée pourraitcauser des dommages physiques à l'utilisateur.

ATTENTION: Ce symbole indique que le défaut de prendre une action spécifiée peut entraîner des dommages à l'équipement.

Info: Ce symbole indique une information qui met l'accent ou des suppléments points importants du texte principal.

Table of Contents

1.0 Introduction 1
1.0.1 Regulatory Compliance 1
1.1 How the MS-PAE Series Inverter/Charger Works 2
1.1.1 Inverter Applications for Permanent Installations 2
1.1.2 Advantages of a Pure Sine Wave Inverter 2
1.2 Features and Benefits 3
2.0 Installation 6
2.1 Pre-Installation 6
2.1.1 Unpacking and Inspection 6
2.1.2 Required Components and Materials 6
2.1.3 Locating the Inverter 8
2.1.4 Mounting the Inverter 9
2.1.5 Wiring the Inverter 11
2.1.6 Protecting Wire – Conduit Box or Inverter Enclosure 11
2.1.7 Wiring Requirements 11
2.1.8 Wire Routing 11
2.1.9 Torque Requirements 11
2.2 DC Wiring 12
2.2.1 DC Wire Sizing 14
2.2.2 DC Overcurrent Protection 14
2.2.3 DC Cable Connections 15
2.2.4 Wiring the Battery Bank 16
2.2.5 Optional Battery Temperature Sensor Installation and Wiring 16
2.2.6 Wiring the Inverter to the Battery Bank 17
2.3 AC Wiring 18
2.3.1 Pre-AC Wiring Requirements 18
2.3.2 AC Wire Size and Overcurrent Protection 18
2.3.3 Recommended Ground Fault Circuit Interruption (GFCI) Breakers 19
2.3.4 AC Input and Output Wiring Connections 19
2.3.5 Wiring the AC Input and Output 20
2.3.6 Using the MS-PAE with Three-Phase Power 22
2.4 Grounding Inverters 24
2.4.1 Sizing the Grounding Electrode Conductors (GEC) 25
2.4.2 System Bonding Jumper 27
2.4.3 Equipment Grounding Conductor 27
2.5 Installing Lightning Arrestors 28
2.6 Inverter Warning Label 28
2.6.1 Inverter Power Identification and Disconnect Location 29
2.7 Final Inspection 29
2.8 Functional Test for a Single MS-PAE Inverter 30
3.0 Operation 31
3.1 Inverter Mode 31
3.2 Standby Mode 32
3.2.1 Battery Charging 32
3.2.2 Transfer Time 34
3.3 Battery Temperature Sensor Operation 34
3.4 Protection Circuitry Operation 35
3.5 Inverter Start-Up 36
3.6 Factory Default Values 37

Table of Contents (Cont.)

3.7 Inverter Fan Operation 38
3.8 Using a Remote with the MS-PAE Series Inverter 38
4.0 Parallel Operation 39
4.1 Overview 39
4.2 Parallel System Requirements 39
4.3 Parallel System Connections and Components 41
4.3.1 AC and DC Connections Simplified using Magnum Panels 41
4.3.2 AC Connections Required in Parallel System 41
4.3.3 DC Connections Required in Parallel System 41
4.4 Functional Test for Parallel-stacked MS-PAE Inverters 43
4.4.1 Power-up Procedure (Stacked System) 43
4.4.2 Verifying Parallel-stacked Communication 43
4.4.3 Performing the Functional Test 45
4.5 Parallel Threshold Feature for MS-PAE Inverters 45
5.0 Using the MS-PAE Series in an AC Coupled Application 46
5.1 What is an AC Coupled System 46
5.2 Frequency Shift Feature 46
5.3 Configuring a Remote to work in an AC Coupled System 46
6.0 Troubleshooting 47
6.1 Resetting the Inverter 48
6.1.1 Performing an Inverter Reset (i.e., soft reset) 48
6.1.2 Performing a Power Reset (i.e., hard reset) 48
Appendix A – Specifications and Optional Equipment 49
A-1 Efficiency Graphs 50
A-2 Optional Equipment/Accessories 51
Appendix B – Battery Information 52
B-1 Battery Location 52
B-2 Battery Types 52
B-3 Battery Temperature 52
B-4 Battery Bank Sizing 52
B-5 Battery Bank Sizing Worksheet 53
B-6 Battery Wiring 54
Appendix C – Power Consumption and Output Waveforms 57
C-1 Appliance Power Consumption 57
C-2 Inverter Output Waveforms 57
Appendix D – Inverter/Charger Terminology 58
Appendix E – PV Rapid Shutdown Compliance 60

List of Figures

Figure 1-1, Power Switch, Status LED, and Accessory Connection Ports 3
Figure 1-2, Electrical Connection Points 4
Figure 1-3, Left Side Features 5
Figure 2-1, Simplified Installation Diagram – Single Inverter 7
Figure 2-2, Approved Mounting Positions 9
Figure 2-3, MS-PAE Series Dimensions 10
Figure 2-4, DC and Battery Temperature Sensor Wiring 13
Figure 2-5, Battery Hardware Installation 15
Figure 2-6, Inverter DC Hardware Installation 15
Figure 2-7, Battery Temperature Sensor 16
Figure 2-8, AC Terminal Block 19
Figure 2-9, AC Wiring (Single unit on a MMP enclosure) 21
Figure 2-10, Connecting the MS-PAE to Three-Phase Power using a Buck-Boost Transformer 23
Figure 2-11, Connecting the MS-PAE Directly to Three-Phase Power 23
Figure 2-12, Grounding System for MS-PAE Series 24
Figure 2-13, Method 1 – DC Ground Rod with Multiple Connections 25
Figure 2-14, Method 2 – DC Ground Rod with Multiple Connections 26
Figure 2-15, Method 3 – DC Ground Rod with Single Connection 26
Figure 2-16, Warning Label 28
Figure 2-17, AC Voltage Checks 30
Figure 3-1, Power Flow – Inverter Mode 31
Figure 3-2, Power Flow – Standby Mode 32
Figure 3-3, Automatic 4-Stage Charging Graph 33
Figure 3-4, BTS Temperature to Charge Voltage Change 34
Figure 3-5, Power Switch and Status Indicator 36
Figure 4-1, Simplified Installation Diagram – Multiple Parallel-stacked Inverters 40
Figure 4-2, Simplified Panel (AC Panel) 41
Figure 4-3, Simplified Panel (DC Panel) 41
Figure 4-4, Battery Connections in a Parallel System 42
Figure 4-5, ME-RTR (Port) Main/Supplementary Displays 44
Figure 6-1, Performing an Inverter Reset 48
Figure A-1, MS4024PAE Efficiency Chart 50
Figure A-2, MS4448PAE Efficiency Chart 50
Figure B-1, Series Battery Wiring 54
Figure B-2, Parallel Battery Wiring 54
Figure B-3, Series-Parallel Battery Wiring 54
Figure B-4, Battery Bank Wiring Examples (24-volt) 55
Figure B-5, Battery Bank Wiring Examples (48-volt) 56
Figure C-1, AC Waveforms 57

List of Tables

Table 2-1, Recommended DC Wire/Overcurrent Device 14
Table 2-2, DC Wire Size For Increased Distance 15
Table 2-3, AC Grounding Electrode Conductor (GEC–AC) Sizing 25
Table 2-4, Equipment Grounding Conductor (EGC) Sizing 27
Table 3-1, Inverter Battery Turn On/Off Levels 35
Table 3-2, Inverter/Charger Default Values* 37
Table 3-3, Inverter Compatibility Level 38
Table 6-1, Troubleshooting Guide 47
Table A-1, MS-PAE Specifications (at 25°C) 49
Table C-1, Typical Appliance Power Consumption 57

1.0 Introduction

Congratulations on your purchase of the MS-PAE Series inverter/charger from DMX Power. The MS-PAE Series is a "pure" sine wave, standalone, non-grid interactive inverter designed to provide 120 and 240 VAC in a single unit to power loads when inverting/charging. It has two 120 VAC lines (L1 and L2), a neutral and a ground. The two 120 VAC output lines are 180° out-of-phase with each other so that the combination of the L1 and L2 lines total 240 VAC, and the voltage between either L1 or L2 and neutral is 120 VAC. The MS-PAE Series charger can accept 120 VAC input (to L1 or L2) or 120/240 VAC split-phase input power (to L1 and L2). The incoming AC power is shared with the charger and the output continues to be 120/240 VAC with either a 120 VAC or a 120/240 VAC input.

When the power requirements of the system are beyond the capacity of a single MS-PAE Series inverter—or the system is expanded as more loads are added—up to four MS-PAE Series inverters can be connected together in a parallel configuration. Connecting inverters in parallel increases the overall inverter power and surge capacity to power a large single load, or several smaller loads.

Simply connect the inverter's output to your distribution circuits or electrical panel, connect your utility or generator power (AC) to the inverter's easy-to-reach terminal block, connect the batteries, and then switch on the power. Using optional remote controls (ME-RTR, ME-ARC, or ME-RC), you can easily operate and monitor your inverter from a remote location.

Info: This is a sizable manual and much of it is fairly technical. Terms may be used throughout the manual that are unfamiliar to you. Refer to the Inverter/Charger Terminology glossary in Appendix D for clarification.

The MS-PAE Series inverter/charger includes the following:

- 4000 watt model in a small footprint—less area needed for installation
- Ability to parallel up to four identical MS-PAE inverters to increase output power capability (requires ME-RTR)
- Pure sine wave output
- 120/240 VAC split-phase output in a single inverter
- Automatic PFC (Power Factor Corrected) multi-stage battery charging
- RS485 standard communication protocol
- Remote and Network ports (easy connection for optional accessories)
- Inverter-mounted ON/OFF switch with LED indicator
- 30-amp per leg AC pass-thru capability
- Field serviceable for qualified personnel—tested repair kits available
- Automatic battery temperature compensation (when using the Battery Temperature Sensor) for optimum charging even during extreme temperature changes
- Overcurrent, over-temperature, and high/low battery voltage protection

1.0.1 Regulatory Compliance

The MS-PAE Series inverter/charger is designated as a Standalone (non grid-interactive) power inverter with an internal battery charger. It can be connected to the utility grid (or to a generator) to allow the inverter batteries to be charged, and to power inverter loads while connected. The MS-PAE Series is not a grid-interactive (also known as utility-interactive) inverter and does not have the capability to export (or sell) power back into the utility grid.

The MS-PAE Series has been tested and listed to UL1741, 1st Edition (Inverters, Converters and Controllers for Use in Independent Power Systems) for use in the US; and is also certified to CSA C22.2 No. 107.1-01 (General Use Power Supplies) for use in Canada. It has been tested and certified to these product safety standards by Intertek Testing Services (known as ETL), which is a Nationally Recognized Testing Laboratory (NRTL). NRTL's are qualified organizations that meet Occupational Safety and Health Administration (OSHA) regulations to perform independent safety testing and product certification.

1.1 How the MS-PAE Series Inverter/Charger Works

There are two main modes of operation associated with the MS-PAE inverter/charger:

Inverter Mode

When the inverter is properly connected to batteries and turned on, the direct current (DC) from the batteries is transformed into a pure sine wave alternating current (AC). This AC is similar to the voltage provided by your utility, and is used to power the electrical appliances (i.e., AC loads) connected to the inverter's output.

Standby Mode

When an external source of AC power (e.g., utility power or generator) is connected and qualified on the inverter's AC input, it operates in Standby mode. In Standby mode, the unit operates as a battery charger to convert the incoming AC power into DC power to recharge the batteries; while at the same time, an internal AC transfer relay is automatically closed and passes the incoming AC power directly to the inverter's output to continue powering the connected electrical appliances.

1.1.1 Inverter Applications for Permanent Installations

An inverter can be used for backup power in a permanent location that normally uses utility power, such as a home or office. When utility power is available, the inverter keeps the batteries charged. When the utility power fails, the inverter comes on automatically to supply AC power to your home or office during the power failure. For a home or business, reliable backup power is needed to prevent lost computer data, or to maintain lights and keep food fresh in the refrigerator/freezer.

In some areas, where utility power is not available, the inverter can be used in a standalone renewable power system. The inverter enables AC electrical appliances to be run from the storage battery bank. When the battery bank becomes discharged, either renewable DC sources (solar, wind, or hydropower) can be used to recharge the batteries, or a generator can be connected to the inverter to power the system while the batteries recharge.

1.1.2 Advantages of a Pure Sine Wave Inverter

Today's inverters come in three basic output waveforms: square wave, modified sine wave (which is actually a modified square wave), and pure sine wave (see Figure C-1 in Appendix C). Modified sine wave inverters approximate a pure sine wave form and will run most appliances (see also Section C-1 "Appliance Power Consumption" in Appendix C) and electronics without any problems. These inverters are less expensive, and therefore, offer a viable alternative to more expensive pure sine inverters.

The output of the MS-PAE Series, which is a pure sine wave inverter, is equal to or in many cases, better than the utility power used in your home. Virtually any electronic device will operate from a pure sine wave inverter. Motors run cooler, microwaves usually cook faster, and clocks keep better time just to name a few examples. Without compromising quality or performance, the MS-PAE Series provides you with all the advantages of a pure sine wave inverter at a much lower cost than many on the market.

The MS-PAE Series is built on the same platform as our popular MS Series which helps reduce cost by using standard parts/accessories across many models. Magnum accessories such as the Advanced Remote Control (ME-ARC), Router (ME-RTR), Automatic Generator Start-Networked (ME-AGS-N), and Battery Monitor Kit (ME-BMK) can be used. See Section A-2 "Optional Equipment and Accessories" for more information on these products.

Info: For the MS-PAE Series inverter/charger to perform optimally, a minimum battery bank of 200 AH is recommended for moderate loads (<1000W), and greater than 400 AH for heavy loads (≥1000W).

1.2 Features and Benefits

The MS-PAE Series inverter/charger is designed to allow quick access to wiring, circuit breakers and controls, and easy viewing of the LED (Light Emitting Diode) status indicator. Its die cast base plate with one-piece aluminum cover ensures maximum durability with minimum weight, as well as cooler more efficient operation. The MS-PAE Series has the following external features (see Figures 1-1, 1-2, and 1-3):

1. **Power ON/OFF Switch** – a momentary pushbutton switch that alternately turns the inverter on or off.

2. **Charging/Inverting LED Indicator** – a green LED that illuminates to provide information on inverter or charger operation.

3. **Stack/Accessories Port (red label)** – a RJ45 port that connects to the ME-RTR router, which is used to configure and synchronize multiple MS-PAE units to operate in parallel for increased power capacity.

CAUTION: Only connect this parallel Stack port to a ME-RTR router. Although the cabling and connectors used in this network system are the same as ethernet connectors, this network is not an ethernet system. Attempting to connect these two different systems may cause damage and is not covered under warranty.

Info: MS-PAE Series inverters cannot be connected in parallel without networking them to the optional ME-RTR (AKA router).

4. **Network Port (green label)** – a RJ11 port that accepts optional network-capable accessories [i.e., Auto Gen Start (AGS) or Battery Monitor (BMK)].

5. **Remote Port (blue label)** – a RJ11 port that allows optional remote control displays (i.e., ME-RC, ME-ARC, or ME-RTR) to be connected.

6. **Battery Temp Sensor Port (yellow label)** – a RJ11 port that accepts the remote Battery Temperature Sensor (BTS) accessory.

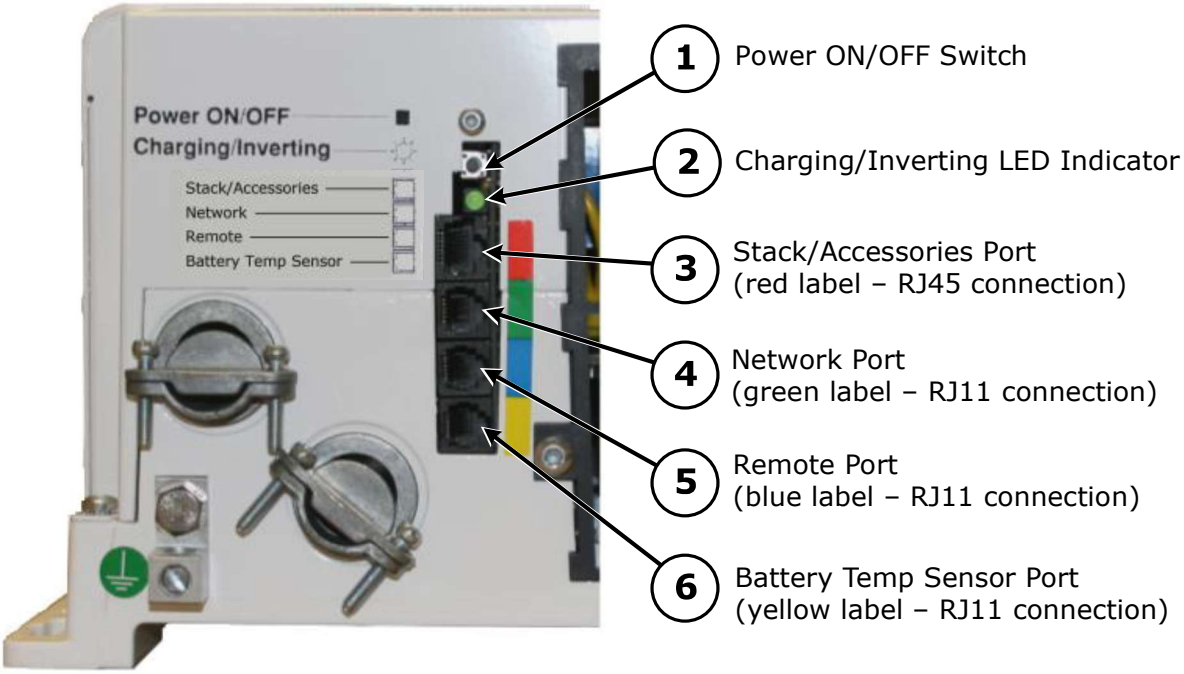

Figure 1-1, Power Switch, Status LED, and Accessory Connection Ports

7 **DC Equipment Ground Terminal** – ties the exposed chassis of the inverter to the DC grounding system. Accepts CU/AL conductors from #14 to #2 AWG (2.1 to 33.6 mm^2).

8 **AC Entry/Exit Connections** – two 3/4" knockouts with cable-clamp strain reliefs to accommodate and hold the AC input and output field wiring.

9 **Intake Air Vents** – ventilation openings that pull in air to keep the inverter cool for peak performance.

10 **Positive DC Terminal** – a 360 degree connection point for the positive (+) cable from the battery bank. Includes a 5/16-18 stainless Kep or Flange nut on a 5/16-18 bolt (5/8" usable length) that holds the battery cable to the positive DC terminal.

11 **Negative DC Terminal** – a 360 degree connection point for the negative (–) cable from the battery bank. Includes a 5/16-18 stainless Kep or Flange nut on a 5/16-18 bolt (5/8" usable length) that holds the battery cable to the negative DC terminal.

12 **Mounting Flange** – secures the inverter to a shelf or wall.

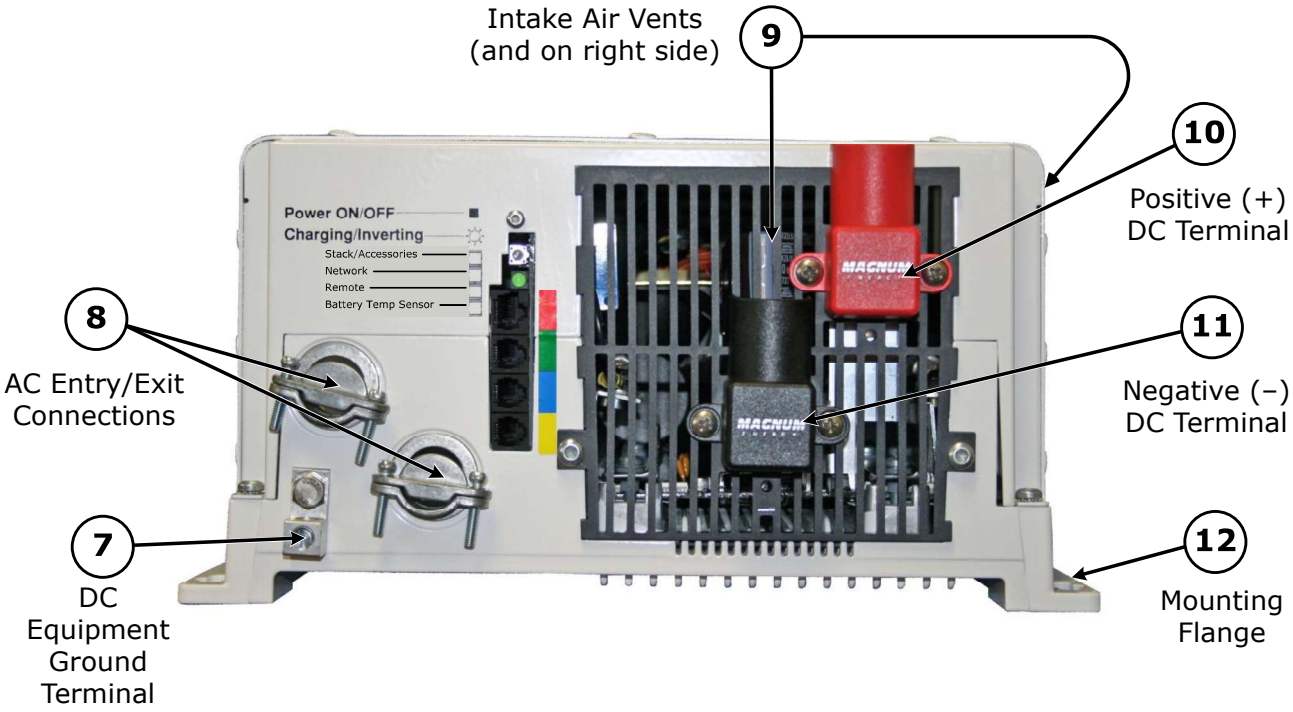

Figure 1-2, Electrical Connection Points

13 **Exhaust Air Vents** – ventilation openings that allows heated air to be removed by the internal cooling fan.

14 **Model/Serial Number Label** – includes model/serial number information, date of manufacture, and inverter and charger specifications. See the **MS-PAE Specifications** in Appendix A for more information and the different models available.

15 **AC Access Cover** – provides access to the internal AC wiring terminal block. This terminal block is used to hardwire all inverter AC input and output wiring connections. Remove the two screws to access the AC wiring terminal block.

16 **Input Circuit Breakers (CB1 and CB2)** – these circuit breakers protect the unit's internal wiring and pass-thru relay on each input (L1 and L2)—while in the standby mode. These input circuit breakers are not branch-circuit rated. These circuit breakers pop out when they open. Press in to reset power capacity.

CAUTION: Circuit breakers that are branch-circuit rated must be installed in the inverter's input and output wiring.

CAUTION: The inverter's internal AC transfer relay is rated for 30 amps per leg. The pass-thru current must be no greater than 30 amps per leg, or damage to the relays may occur.

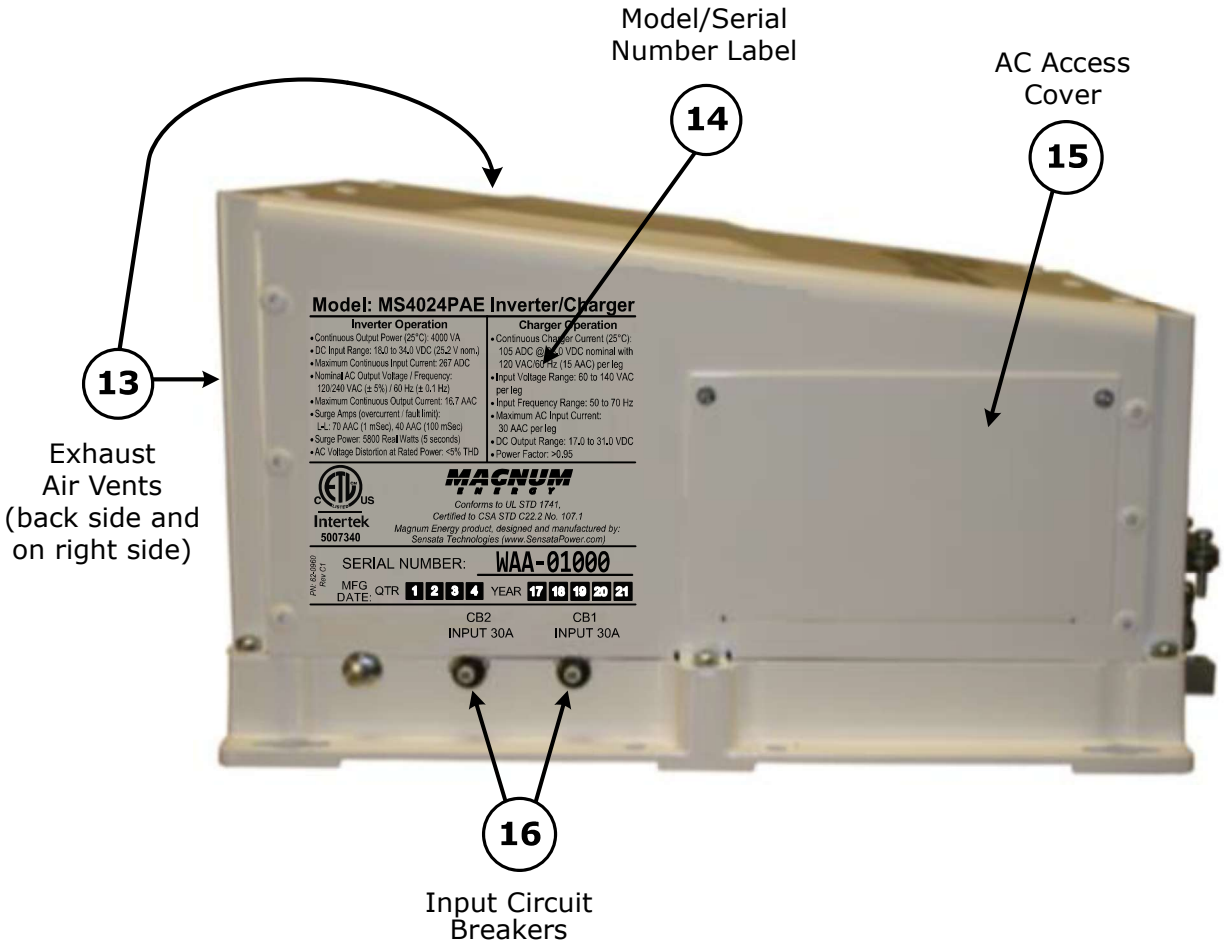

Figure 1-3, Left Side Features

2.0 Installation

Before proceeding, read the entire installation section to determine how you are going to install your MS-PAE inverter/charger. The more thorough you plan in the beginning, the better your inverter needs will be met.

Info: Installations should be performed by qualified personnel, such as a licensed or certified electrician. It is the installer's responsibility to determine which safety codes apply and to ensure that all applicable installation requirements are followed. Applicable installation codes vary depending on the specific location and application of the installation.

CAUTION: Review the "Important Product Safety Information" on pages ii-v before proceeding with the installation.

CAUTION: The inverter is heavy (55 lb/24.9 kg). Use proper lifting techniques during installation to prevent personal injury.

The simplified system diagrams shown in this manual are provided to assist you in planning and designing your installation. They are not intended to override or restrict any national or local electrical codes. These diagrams should not be the determining factor as to whether the installation is compliant, that is the responsibility of the electrician and the on-site inspector.

Info: If you are installing multiple MS-PAE inverters in a parallel configuration, follow the information in this section and refer also to Section 4.0 for specific parallel instructions.

2.1 Pre-Installation

2.1.1 Unpacking and Inspection

Carefully remove the MS-PAE Series inverter/charger from its shipping container and inspect all contents. Verify the following items are included:

- The MS-PAE inverter/charger
- Red and black DC terminal covers with Phillips screws
- AC access cover with two Phillips screws
- Two 5/16" Kep or Flange nuts (installed on the DC terminals)
- Warning label

If items appear to be missing or damaged, contact your authorized Magnum product dealer or DMX Power. If at all possible, keep your shipping box. It will help protect your inverter from damage if it ever needs to be returned for service. Save your proof-of-purchase as a record of your ownership; it will also be needed if the unit should require in-warranty service.

Record the unit's model and serial number in the front of this manual in case you need to provide this information in the future. It is much easier to record this information now, instead of trying to gather it after the unit has been installed.

2.1.2 Required Components and Materials

Hardware/Materials:

- Conduit, strain-reliefs and appropriate fittings
- 1/4" mounting bolts and lock washers (x4 minimum)
- Wire ties
- Electrical tape

Tools:

- Misc. screw drivers
- Drill and drill bits
- Multimeter
- 1/2" wrench
- Pliers
- Level
- Wire strippers
- Pencil or marker

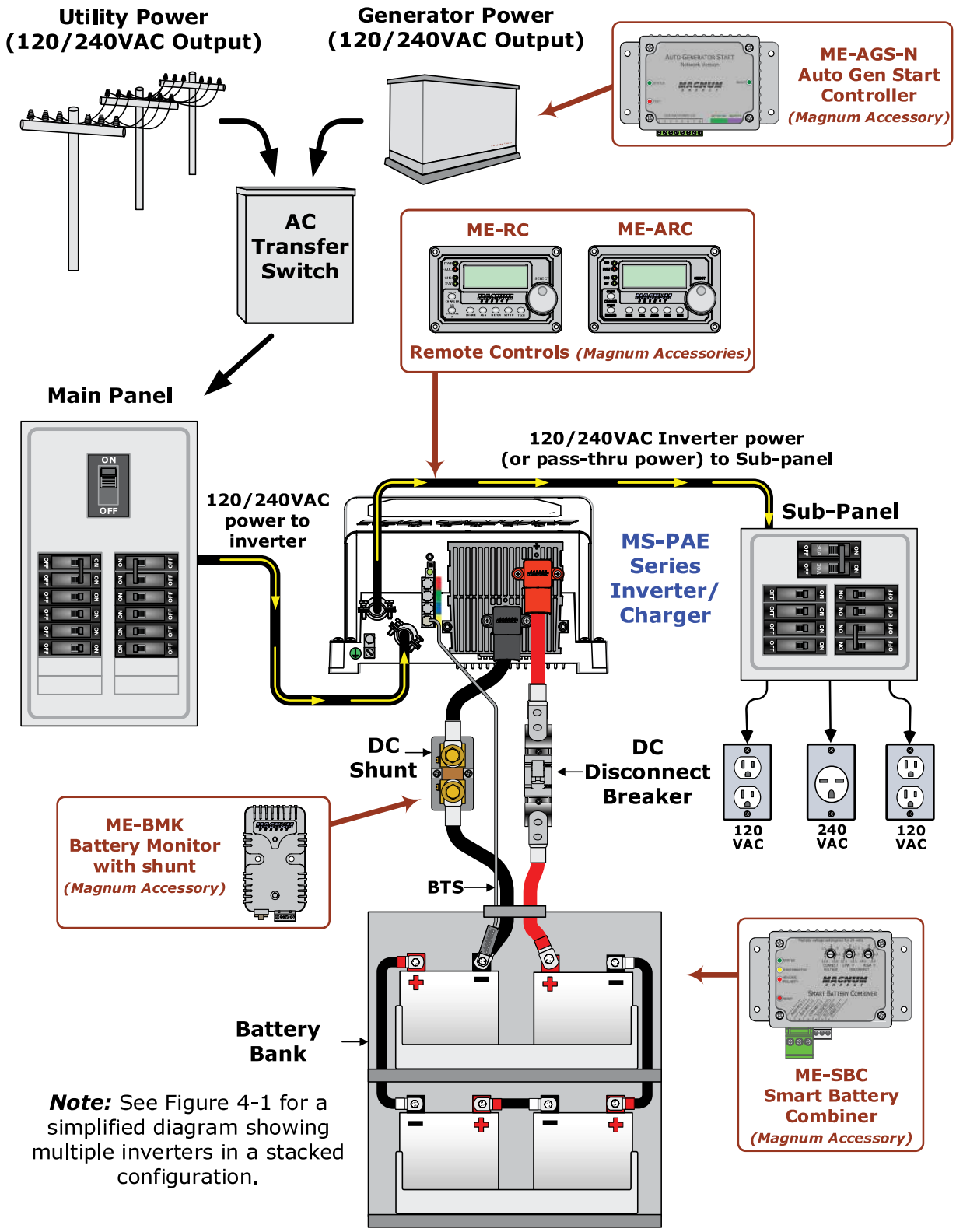

Note: See Figure 4-1 for a simplified diagram showing multiple inverters in a stacked configuration.

Figure 2-1, Simplified Installation Diagram – Single Inverter

2.1.3 Locating the Inverter

Only install the inverter in a location that meets the following requirements:

Clean and Dry – The inverter should not be installed in an area that allows dust, fumes, insects or rodents to enter or block the inverter's ventilation openings. This area also must be free from any risk of condensation, water, or any other liquid that can enter or fall on the inverter. The inverter uses stainless steel fasteners, plated copper busbars, a power-coated aluminum base, and the internal circuit boards are conformal coated—all done to help fight the harmful effects of corrosive environments. However, the life of the inverter is uncertain if used in these type of environments, and inverter failure under these conditions is not covered under warranty.

Info: If the inverter is installed in an area where moisture may occur, we recommend putting silicone dielectric grease compound into the RJ45/RJ11 electrical ports (Figure 1-1, Items 3-6). Before installing the accessory cables or if leaving any ports open, squirt a liberal amount into each port. Silicone dielectric compound makes an effective moisture barrier to help prevent corrosion.

Cool – The inverter should be protected from direct sun exposure or equipment that produces extreme heat.

Info: The ambient temperature around the inverter must not exceed 77°F (25°C) to meet power specifications.

Ventilation – In order for the inverter to provide full output power and avoid over-temperature fault conditions, do not cover or block the inverter's ventilation openings or install this inverter in an area with limited airflow. The inverter uses two internal fans to provide forced air cooling, these fans pull in air through the intake vents (Figure 1-2, Item 9) and blow out air through the exhaust vents (Figure 1-3, Item 13). Allow at the minimum an airspace clearance of 6" (15.2 cm) at the intake and exhaust vents, and 3" (7.6 cm) everywhere else to provide adequate ventilation.

If the inverter is installed in an enclosure, a fresh air intake opening must be provided directly to the front side (intake vents) of the inverter and an exhaust opening on the back side (exhaust vents) of the inverter. This will allow cool air from the outside to flow into the inverter and heated air to exit from the inverter and out of the enclosure. When mounted in an enclosed compartment, airflow must be at least 100 cfm in order to maintain no more than a 68°F (20°C) rise in compartment temperature.

CAUTION: Do not install this inverter in a zero clearance compartment. Do not cover or obstruct the ventilation openings—overheating may result.

Safe – Keep any flammable/combustible material (i.e., paper, cloth, plastic, etc.) that may be ignited by heat, sparks, or flames at a minimum distance of 2 feet (61 cm) away from the inverter. Do not install this inverter in any area that contains extremely flammable liquids like gasoline or propane, or in locations that require ignition-protected devices.

Close to the battery bank – As with any inverter, it should be located as close to the batteries as possible. Long DC wires tend to lose efficiency and reduce the overall performance of an inverter. However, the unit should not be installed in the same compartment as the batteries or mounted where it will be exposed to gases produced by the batteries. These gases are corrosive and will damage the inverter; also, if these gases are not ventilated and allowed to collect, they could ignite and cause an explosion. The absolute maximum recommended battery cable length is 15 feet (4.6 m).

Accessible – Do not block access to the inverter's RJ45/RJ11 electrical ports, ON/OFF switch, and status indicator. Also, allow enough room to access the AC and DC wiring terminals and connections, as they will need to be checked and tightened periodically. See Figure 2-3 for the MS-PAE Series inverter/charger's dimensions.

Away from sensitive electronic equipment – High powered inverters can generate levels of RFI (Radio Frequency Interference). Locate any electronic equipment susceptible to radio frequency and electromagnetic interference as far away from the inverter as possible.

2.1.4 Mounting the Inverter

The inverter base can reach a temperature up to 194°F (90°C), and should be mounted on a noncombustible surface*. This surface and the mounting hardware must also be capable of supporting at least twice the weight of the inverter. To meet regulatory requirements, the MS-PAE Series must be mounted in one of the following positions—as shown in Figure 2-2:

- above or under a horizontal surface (shelf or table),
- or, on a vertical surface (wall) with the DC terminals toward the bottom, the MP-HOOD (inverter hood) installed over the exhaust vents (top), and either the ME-CB or MPX-CB (Conduit box), the MMP Series (single inverter enclosure), or the MP Series (multiple inverter enclosure) attached to the inverter's DC end (bottom).

Info: ME-CB, MPX-CB, MMP/MP Series enclosures prevent material from falling out the bottom in the event of an internal fire, and also allow sufficient ventilation to prevent the inverter from overheating under normal operating conditions. The MP-HOOD inverter hood helps prevent items from falling inside causing damage to the inverter.

Info: DMX Powerprovides a back plate with a suitable surface for mounting the inverter. These back plates also provide the ability to mount either the MMP Series enclosure (PN: BP-MMP) or the MP Series Enclosure (PN: BP-S, Single Plate or BP-D, Dual Plate).

After determining the mounting position, refer to the physical dimensions as shown in Figure 2-3 or use the base of the inverter as a template to mark your mounting screw locations. After marking the mounting screw locations, mount the unit with appropriate mounting hardware.

** Noncombustible surface – Material that will not ignite, burn, support combustion, or release flammable vapors when subjected to fire or heat as per the ASTM E136 standard (such as fiber cement board, stone, steel, iron, brick, tile and concrete). Common building materials such as gypsum board as well as any paint, wall coverings, and certainly wood will not suffice.*

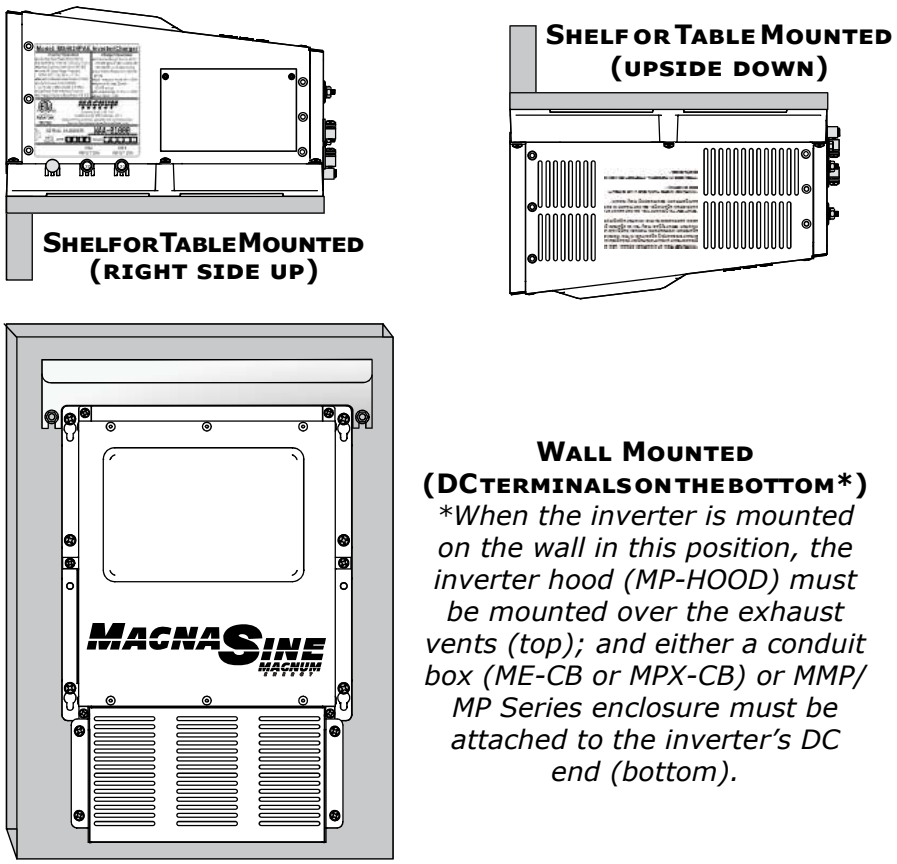

Figure 2-2, Approved Mounting Positions

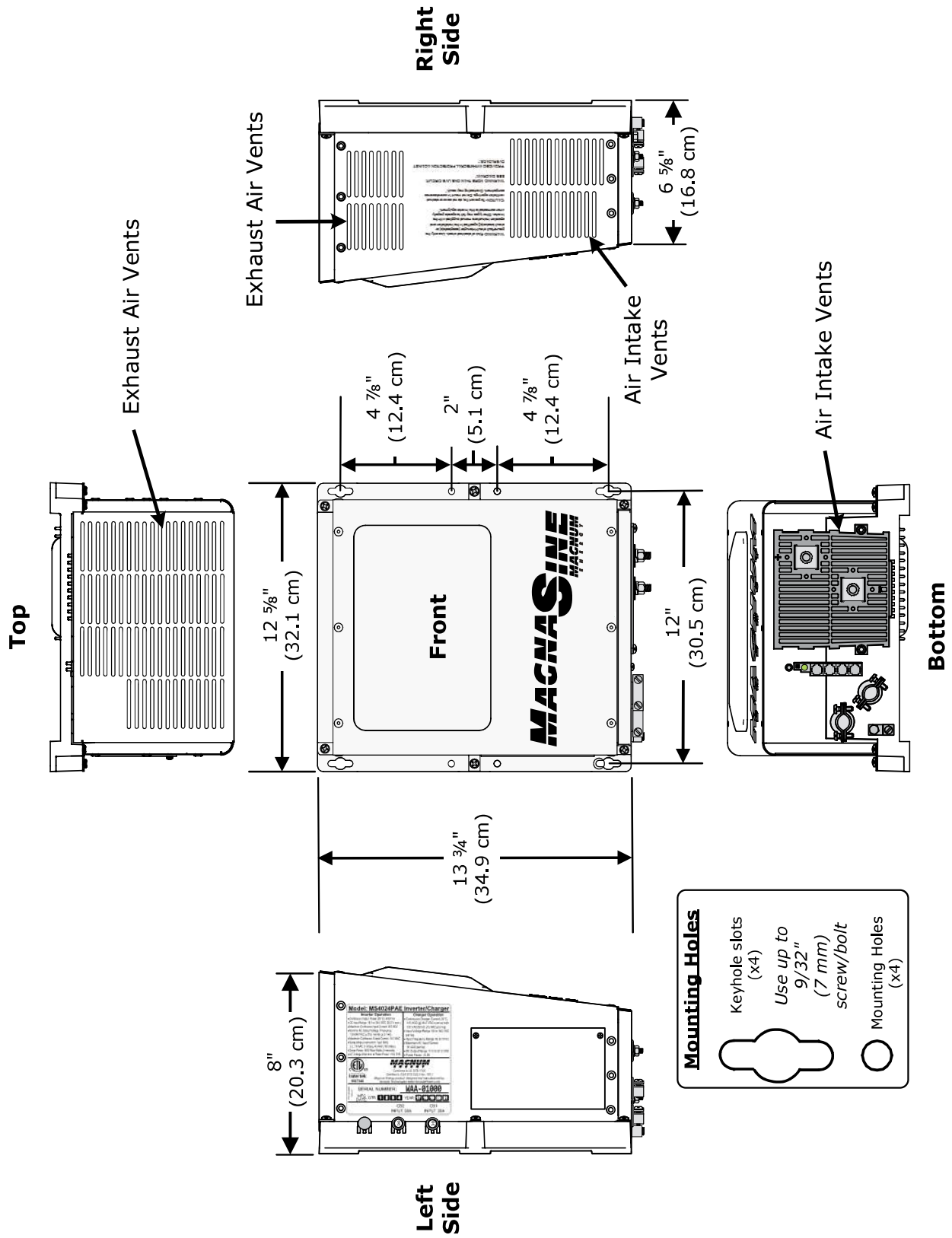

Figure 2-3, MS-PAE Series Dimensions

2.1.5 Wiring the Inverter

This section also describes the requirements and recommendations for wiring the MS-PAE Series inverter/charger. Before wiring the MS-PAE Series inverter/charger, read all instructions.

All wiring should meet all local codes and standards and be performed by qualified personnel such as a licensed electrician.

The NEC (National Electric Code, ANSI/NFPA 70) for the United States and the CEC (Canadian Electrical Code) for Canada provide the standards for safely wiring residential and commercial installations. The NEC/CEC lists the requirement for wire sizes, overcurrent protection, and installation methods and requirements.

Inverter/charger systems involve power from multiple sources (inverter, generator, utility, batteries, solar arrays, etc.) which make the wiring more hazardous and challenging.

The input and output AC and DC circuits are isolated from the inverter chassis. The inverter system grounding is the responsibility of the installer in accordance with the NEC.

WARNING: To prevent accidental shock, ensure all sources of DC power (i.e., batteries, solar, wind, or hydro) and AC power (utility power or AC generator) are de-energized (i.e., breakers opened, fuses removed) before proceeding.

2.1.6 Protecting Wire – Conduit Box or Inverter Enclosure

The AC and DC wires into and out of the inverter must be protected by rigid tubing, as required by code to comply with residential and commercial installations. This is normally done by feeding the wires through conduit. DMX Power provides a conduit box (ME-CB or MPX-CB), a single inverter enclosure (MMP Series), and a multiple inverter enclosure (MP Series) that include knockouts to conveniently accommodate AC/DC wiring enclosed and protected by conduit. The MP/MMP enclosures also include the necessary AC and DC inverter breakers that allow both the AC and DC conduit to be connected to the inverter.

2.1.7 Wiring Requirements

- All conductors that are at risk to physical damage must be protected by conduit, tape, or placed in a raceway.
- Always check for existing electrical, plumbing, or other areas of potential damage prior to making cuts in structural surfaces or walls.
- Both AC and DC overcurrent protection must be provided as part of the installation.
- The inverter requires a reliable negative and ground return path directly to the battery.
- Use only copper wires with a minimum temperature rating of 194°F (90°C).

2.1.8 Wire Routing

Before connecting any wires, determine all wire routes throughout the home to and from the inverter. Typical routing scenarios are:

- AC input wiring from the main AC panel to the inverter
- AC input wiring from a generator (optional) to the inverter
- DC input wiring from the batteries to the inverter
- AC output wiring from the inverter to an AC sub-panel or to dedicated circuits
- Battery Temperature Sensor cable from the inverter to the batteries
- Remote control cable (optional) to the inverter
- Ground wiring from the inverter to an external ground

2.1.9 Torque Requirements

Torque all AC wiring connections to 16 in lbf (1.8 Nm) and AC/DC ground connections to 45 in lbf (5.1 Nm). Torque DC cable connections from 10 to 12 ft lbf (13.6 to 16.3 Nm).

2.2 DC Wiring

This section describes the inverter's required DC wire sizes and the recommended disconnect/ overcurrent protection, and how to make the DC connections to the inverter and the battery bank. Refer to Figure 2-1 and Figure 2-4 when connecting the DC wires.

WARNING: Even though DC voltage is "low voltage" significant hazards may be present, particularly from short circuits of the battery system.

CAUTION: The inverter is NOT reverse polarity protected—which means that if the negative and positive battery voltage are connected backwards to the inverter, the inverter will likely be damaged. You should verify the correct voltage polarity using a voltmeter BEFORE connecting the DC wires. To avoid polarity problems, color code the DC cables/wires with colored tape or heat shrink tubing: RED for positive (+), WHITE for negative (–), and GREEN for DC ground.

CAUTION: To remove battery power from the inverter, disconnect the battery positive connection before the negative connection. This requirement can prevent damage to the inverter and/or an accessory connected to the inverter.

Note: *When an accessory that is not powered by the inverter (e.g., ME-AGS-N and ME-BMK) is installed and connected to the inverter (via a network communication cable), the battery negative connection of the inverter and each accessory must be at the same potential (i.e., electrically common with each other) until the positive connection of each device is removed. This prevents a high-impedance path developing between the connected devices (i.e., inverter and accessories), which can cause the network cable to become the DC return path to the battery—possibly resulting in permanent damage to all connected devices on the network. This can be prevented if the battery negative connection of each device is always connected before connecting/disconnecting any battery positive.*

CAUTION: Before wiring the DC cables, review the safety information at the beginning of this manual and the following guidelines to ensure a safe and long-lived system:

- When the inverter is installed in a photovoltaic system, the NEC requires that the DC circuit conductors and overcurrent devices to the inverter be sized to carry not less than 125 percent of the inverter's maximum current rating.
- The DC positive and negative cables connected to the inverter from the battery bank should be tied together with wire ties or electrical tape approximately every 6 inches (15.2 cm). This helps improve the surge capability and reduces the effects of inductance, which improves the inverter waveform and reduces the wear of the inverter's filter capacitors.
- Crimped and sealed copper ring terminal lugs (with a 5/16" hole) should be used to connect the DC wires to the inverter's DC terminals.
- The battery bank voltage MUST match the DC voltage required by the inverter (i.e., 24-volt battery bank for a 24-volt inverter), or the inverter may be damaged.
- To ensure the maximum performance from the inverter, all connections from the battery bank to the inverter should be minimized—the exception is the DC overcurrent disconnect in the positive line and a shunt in the negative line. Any other additional connection will contribute to additional voltage drops, and these extra connection points may loosen during use.
- Check all connections to the battery terminals periodically (once a month) for proper tightness. The torque requirement for the DC terminals is between 10 to 12 ft lbf (13.6 to 16.3 Nm). Be aware that overtightening or misthreading the nuts on the DC terminals can cause the bolts to strip and snap/break off.
- A brief spark or arc may occur when connecting live battery cables to the inverter's DC terminals; this is normal and due to the inverter's internal capacitors being charged.

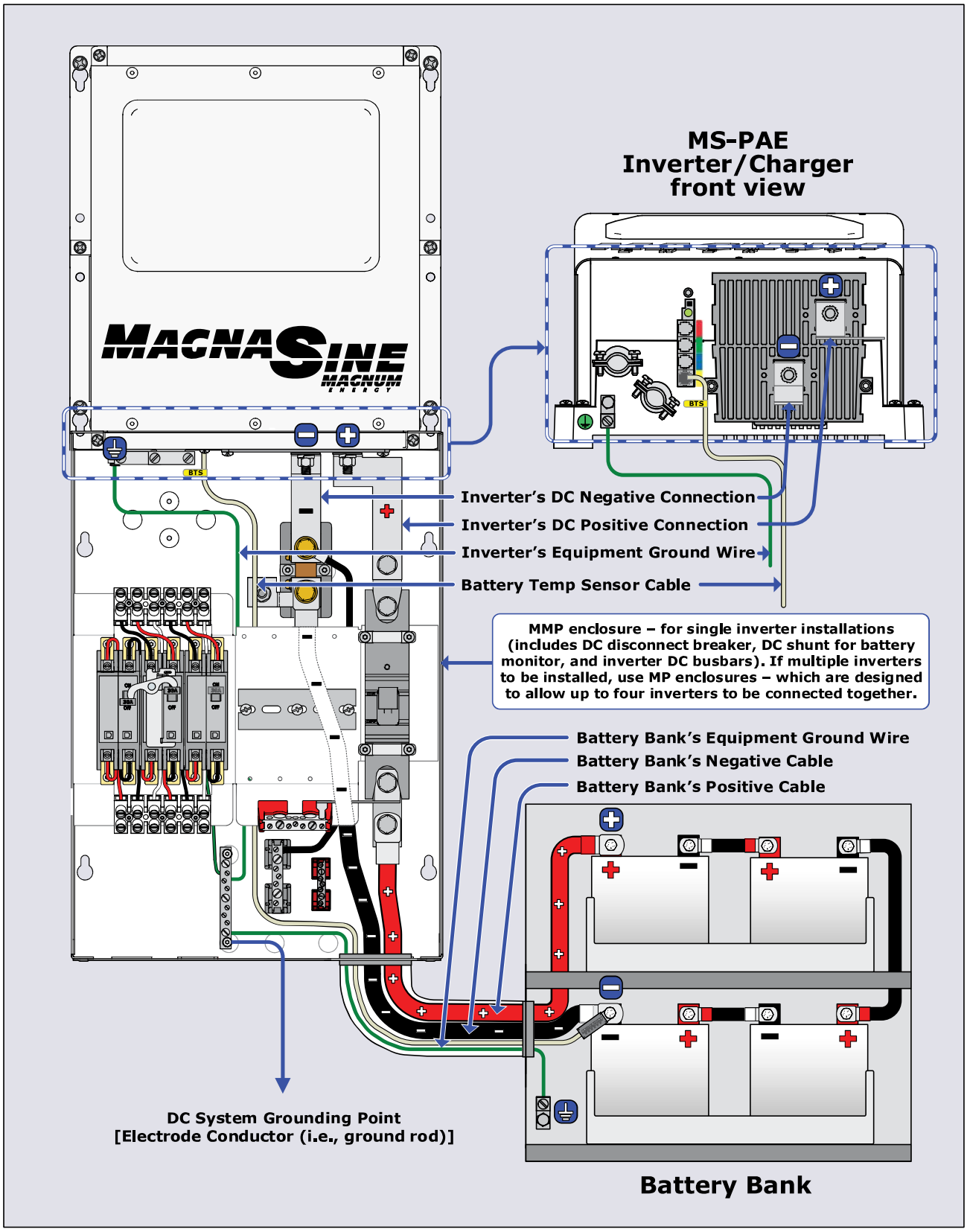

Figure 2-4, DC and Battery Temperature Sensor Wiring

2.2.1 DC Wire Sizing

It is important to use the correct DC wire to achieve maximum efficiency from the system and to reduce fire hazards associated with overheating. Always keep your wire runs as short as practical to prevent low voltage shutdowns and to keep the DC breaker from nuisance tripping (or open fuses) because of increased current draw. Use Table 2-1 to select the minimum DC wire size (and corresponding overcurrent device) required based on your inverter model. The cable sizes listed in Table 2-1 for your inverter model are required to reduce stress on the inverter, minimize voltage drops, increase system efficiency, and ensure the inverter's ability to surge heavy loads.

If the distance from the inverter to the battery bank is >5 feet (1.5 m), the DC wire size needs to be increased. Longer distances cause an increase in resistance, which affects inverter performance. While continuing to use the overcurrent device per Table 2-1, refer then to Table 2-2 to determine the minimum DC wire size needed for various distances—based on the model of your inverter.

2.2.2 DC Overcurrent Protection

For safety and to comply with electrical code regulations, you must install a DC overcurrent protection device in the positive DC cable line to protect your DC cables. This DC overcurrent device can be a fuse or circuit breaker and must be DC rated. It must be correctly sized according to the size of DC cables being used—which means it is required to open before the cable reaches its maximum current carrying capability, thereby preventing a fire. In a residential or commercial electrical installation, the NEC requires both overcurrent protection and a disconnect switch. If a circuit breaker is used as the overcurrent protection device, it can also be used as the required DC disconnect. For maximum protection, install the circuit breaker (or fuse/disconnect) as near as practical to the batteries.

If a fuse is used as an overcurrent device, a Class-T type or equivalent is required. This fuse type is rated for DC operation, can handle the high short-circuit currents, and allows for momentary current surges from the inverter without opening. However, because the fuse can be energized from both directions, if it is accessible to unqualified persons, the NEC requires that it be installed in a manner that the power can be disconnected on both ends of the fuse before servicing.

Use Table 2-1 to select the DC overcurrent device based on the minimum wire size according to your inverter model.

Table 2-1, Recommended DC Wire/Overcurrent Device

Inverter Model	Maximum Continuous Current[1]	NEC Current[2]	Recommended DC Wire Size [conduit rating][3]	Recommended DC Overcurrent Device	DC Ground Electrode Wire Size[5]
MS4024PAE	222 amps	278 amps	#4/0 AWG (107.2 mm²) [260 amps]	250 amps[4]	#6 AWG (13.3 mm²)
MS4448PAE	122 amps	153 amps	#2/0 AWG (67.4 mm²) [195 amps]	175 amps	#6 AWG (13.3 mm²)

Note[1] *– Maximum Continuous Current is based on continuous power rating at the lowest input voltage.*

Note[2] *– NEC Current is based on the Maximum Continuous Current rating with a 125% NEC derating for sizing the overcurrent device (when not continuous duty) to prevent operation at more than 80% of rating.*

Note[3] *– Copper wire rated with 194°F (90°C) insulation at an ambient temperature of 86°F (30°C), with a multiple cable fill factor (0.8) derating (if needed).*

Note[4] *– The next larger standard size overcurrent device may be used if the derated cable ampacity falls between the standard overcurrent device sizes found in the NEC.*

Note[5] *– Per the NEC, the DC grounding electrode conductor can be a #6 AWG conductor if that is the only connection to the grounding electrode and that grounding electrode is a rod, pipe, or plate electrode.*

Table 2-2, DC Wire Size For Increased Distance

	Minimum Recommended DC Wire Size (one way)*		
	≤5 ft (1.5 m)	**5 to 10 ft (1.5 to 3.1 m)**	**10 to 15 ft (3.1 to 4.6 m)**
MS4024PAE	#4/0 AWG (107.2 mm²)	#4/0 AWG x 2 (107.2 mm²)	not recommended
MS4448PAE	#2/0 AWG (67.4 mm²)	#4/0 AWG (107.2 mm²)	#4/0 AWG x 2 (107.2 mm²)

** Copper wire rated with 194°F (90°C) insulation at an ambient temperature of 86°F (30°C).*

2.2.3 DC Cable Connections

Do not put anything between the DC cable ring lug and the battery terminal post or the flat metal part of the inverter's DC terminal. When connecting the DC cable to the battery or to the inverter's DC terminals, the cable should be placed directly against the inverter or battery terminals. Incorrectly installed hardware causes a high resistance connection which could lead to poor inverter/charger performance, and may melt the cable and terminal connections.

Refer to Figures 2-5 and 2-6 for the correct way to connect the DC cables and to stack the hardware. Tighten the DC cable connections from 10 to 12 ft lbf (13.6 to 16.3 Nm).

CAUTION: The DC terminal bolt and nut are made of stainless steel, which has a high likelihood of seizure. To help prevent the bolt and nut from seizing—causing the bolt to strip or snap/break-off—the use of an anti-seize lubricant is highly recommended.

Info: If an antioxidant grease or spray is used, apply it after all the connections have been made and are properly tighten.

Info: A 1/2-inch wrench or socket is used to tighten the 5/16 SAE Flange or Kep nuts.

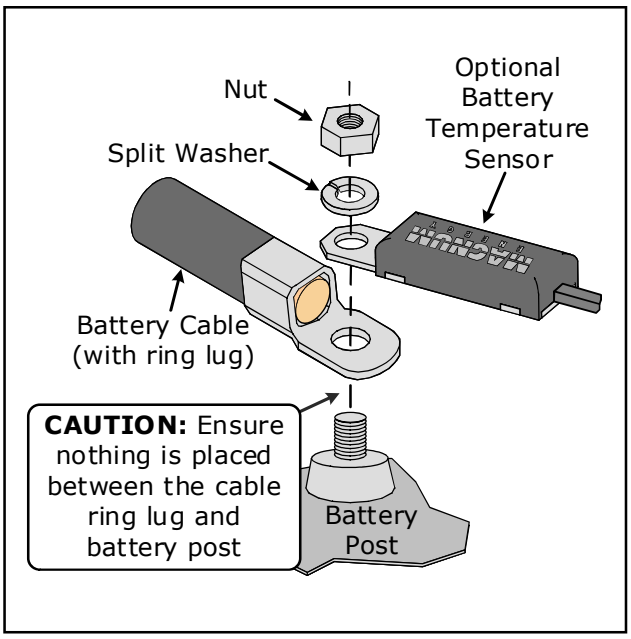

Figure 2-5, Battery Hardware Installation

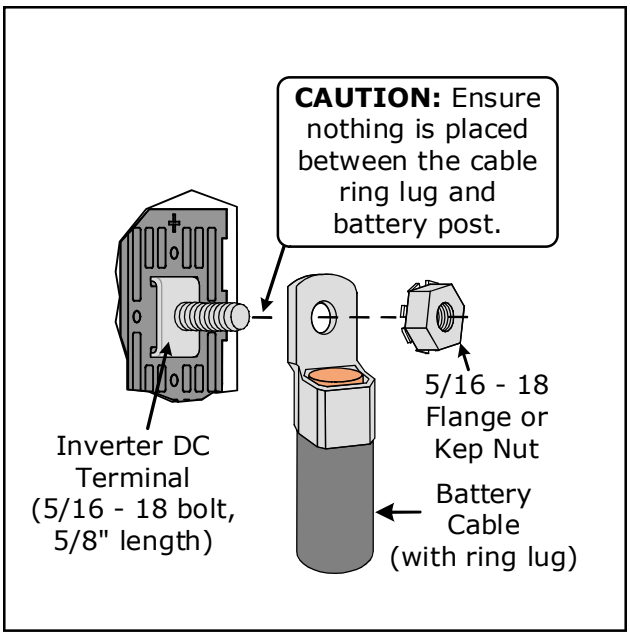

Figure 2-6, Inverter DC Hardware Installation

2.2.4 Wiring the Battery Bank

WARNING: Lethal currents will be present if the positive and negative cables attached to the battery bank touch each other. During the installation and wiring process, ensure the cable ends are insulated or covered to prevent touching/shorting the cables.

CAUTION: DO NOT connect the DC wires from the battery bank to the inverter until 1) all DC and AC wiring is complete, 2) the correct DC and AC overcurrent protection has been installed, and 3) the correct DC voltage and polarity have been verified.

Info: For the MS-PAE Series inverter/charger to perform optimally, a minimum battery bank of 200 AH is recommended for moderate loads (<1000W), and greater than 400 AH for heavy loads (≥1000W).

Depending upon the type of batteries you use in the installation (6 or 12 VDC), the batteries must be wired in series, parallel, or series-parallel to provide the correct voltage (see Appendix B – Battery Information for guidance on wiring batteries together). The interconnecting DC wires must be sized and rated exactly the same as those that are used between the battery bank and the inverter.

Place the batteries as close as practical to the inverter, preferably in an insulated and ventilated enclosure. Allow adequate space above the batteries to access the terminals and vent caps (as applicable). Also, allow at least 1” (2.5 cm) of space between the batteries to provide good air flow. DO NOT mount the batteries directly under the inverter.

Info: To ensure the best performance from your inverter system, batteries should be of the same size, type, rating, and age. Do not use old or untested batteries.

CAUTION: Install batteries in a well-ventilated area. Batteries can produce explosive gasses. For compartment/enclosure installations, always vent batteries to the outside.

2.2.5 Optional Battery Temperature Sensor Installation and Wiring

The Battery Temperature Sensor (shown in Figure 2-7) provides the inverter with precise battery temperature information to automatically adjust the battery charger’s bulk, absorb, and float voltage set-points. This allows the batteries to be correctly charged under extreme temperature changes. If the temperature sensor is NOT installed, and the batteries are subjected to large temperature changes, the battery life may be shortened.

To install the BTS:

1. Attach the ring terminal end of the Battery Temperature Sensor (BTS) to the negative battery terminal (see Figure 2-5 for proper connection to the battery terminal).
2. Route the BTS cable to the inverter following existing wire runs.
3. Connect the RJ11 connector end of the BTS cable to the BTS port (yellow label) on the inverter.

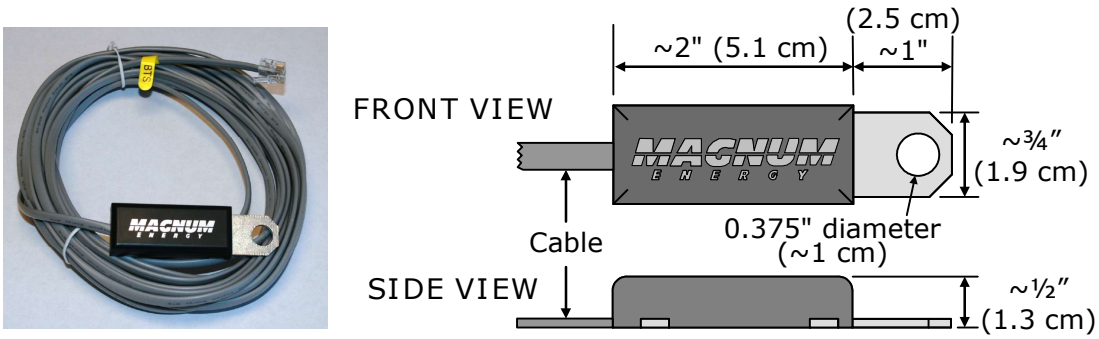

Figure 2-7, Battery Temperature Sensor

2.2.6 Wiring the Inverter to the Battery Bank

CAUTION: The inverter is NOT reverse polarity protected, if this happens the inverter will be damaged and will not be covered under warranty. Before connecting the DC wires from the batteries to the inverter, verify the correct battery voltage and polarity using a voltmeter. If the positive terminal of the battery is connected to the negative terminal of the inverter and vice versa, severe damage will result. If necessary, color code the cables (with colored tape): RED for positive (+) and WHITE for negative (–) to avoid polarity confusion.

Info: The DC overcurrent device (i.e., circuit breaker) must be placed in the positive (red) DC cable line between the inverter's positive DC terminal and the battery's positive terminal (red); as close to the battery as possible.

DC Ground Wire

1. Route an appropriately sized DC grounding wire (green or bare wire) from the inverter's DC equipment ground terminal (Figure 1-2, Item 7) to a dedicated system ground. Recommended tightening torque is 45 in lbf (5.1 Nm). Refer to Section 2.4 for grounding information and sizing the DC ground wires.

DC Negative Wire

2. Route an appropriately sized DC negative wire (white) from the negative terminal of the battery bank to the inverter's negative terminal (Figure 1-2, Item 11).

   Info: If installing a battery monitor such as the ME-BMK, install a DC shunt in-line with the negative battery cable.

DC Positive Wire

3. Mount the circuit breaker assembly as near as practical to the batteries, and then open the circuit breaker.

   WARNING: DO NOT close the DC circuit breaker to connect battery power to the inverter at this time. This will occur in the **Functional Test** after the installation is complete.

   CAUTION: If connecting live battery cables to the inverter's DC terminals, a brief spark or arc may occur; this is normal and due to the inverter's internal capacitors being charged.

4. Route and connect an appropriately sized DC positive wire (red) from the inverter's positive DC terminal (Figure 1-2, Item 10) to one end of circuit breaker (or DC fuse block).
5. Connect a short wire (same rating as the DC wires) to the other side of the DC circuit breaker and the other end of the short wire to the positive terminal of the battery bank (see Figure 2-1 for reference).
6. Ensure the DC wire connections (on the batteries, inverter, and DC circuit breaker) are flush on the surface of the DC terminals, and the hardware (lock washer and nut) used to hold these connections are stacked correctly (see Figures 2-5 and 2-6). Verify all DC connections are torqued from 10 to 12 ft lbf (13.6 to 16.3 Nm).
7. Once the DC connections are completely wired and tested, coat the terminals with an approved anti-oxidizing spray.
8. Attach the red and black terminal covers over the inverter's DC connectors, and then secure them in place with the supplied screws (see Figure 1-2).

If the batteries are in an enclosure, perform a final check of the connections to the battery terminals, then close and secure the battery enclosure.

2.3 AC Wiring

This section provides information on how to make the AC connections to the inverter using the correct AC wire size and the corresponding overcurrent protection. Refer to Figure 2-9 for a visual overview of the AC wiring. (***Note:*** *the MS-PAE inverter in Figure 2-9 is installed on a MMP enclosure.*)

2.3.1 Pre-AC Wiring Requirements

CAUTION: Before installing any AC wiring, review the safety information and cautionary markings at the beginning of this manual and the following guidelines.

- Always use properly rated circuit-breakers. If using an electrical sub-panel, circuit breakers can only be moved from the main electrical panel to the sub-panel if the breakers are also listed to be installed in the sub-panel.
- AC wiring must be no less than #10 AWG (5.3 mm^2) gauge copper wire and be approved for residential wiring per the NEC (THHN as an example).
- DO NOT connect the inverter's output to an external AC power source unless used in an AC coupled application*. Otherwise, severe damage to the inverter may occur; and this damage is easily detected and is not covered under warranty.

  ** This inverter has the ability to be used in an AC coupled application, which allows the inverter's output to be connected to a grid-tie inverter's output. The grid-tie inverter's output is synchronized to the inverter's output so that the two AC outputs can be connected together without damaging either inverter.*
- The wire sizes recommended in this manual are based on the ampacities given in Table 310.16 (in conduit) or Table 310.17 (in free air) of the NEC, ANSI/NFPA 70, for 167°F (75°C) copper wire based on an ambient temperature of 86°F (30°C).

2.3.2 AC Wire Size and Overcurrent Protection

The AC input and output wiring must be sized to ensure the wires' ability to safely handle the inverter's maximum load current. After determining the proper AC wire sizes, the inverter's AC input and output wires are required to be protected from short circuits and overloads by an overcurrent protection device, and have a means to disconnect the AC circuits.

Overcurrent protection is not included in the inverter and must be provided as part of the installation. The overcurrent protection device must be a circuit breaker or a fuse, and be properly sized and branch circuit-rated for the wire it is protecting and the appliances being powered.

The MS-PAE Series provides a terminal block (see Figure 2-8) that allows the AC input and output wiring to be permanently installed. This terminal block allows a service/distribution panel (main panel) to be wired to the inverter's input, and a dedicated panel (sub-panel) to be wired between the inverter's output wiring and the AC loads. These systems use the circuit breakers provided in the panels as the overcurrent protection and the AC disconnect device.

Info: When wiring the AC input and output circuits, we highly recommend a full system Inverter Bypass Switch. This simple item provides a convenient way to isolate the inverter for battery maintenance, and could save hours of downtime by enabling you to continue to power your AC loads without any re-wiring.

When in Standby mode, the full AC continuous pass-thru capacity of the MS-PAE inverter/charger is 30 amps for each AC leg (AC HOT 1 and AC HOT 2). To obtain the 30-amp continuous pass-thru capability, each AC HOT input to the inverter requires a 30-amp continuous duty rated double-pole breaker[1], which corresponds to a minimum cable size of #10 AWG[2] in conduit. If you are using other wire sizes, refer to the appropriate electrical codes for circuit breaker requirements.

CAUTION: The inverter's internal AC transfer relay is rated for 30 amps (each leg), the pass-thru current must be no greater than 30 amps or damage to this relay may occur.

Note[1] *– Per NEC, if the breaker is not rated for 100% continuous duty it must be derated by 80%.*
Note[2] *– Copper wire rated with 194°F (90°C) insulation at an ambient temp of 86°F (30°C).*

2.3.3 Recommended Ground Fault Circuit Interruption (GFCI) Breakers

In compliance with UL standards, DMX Power has tested some GFCIs to ensure they function properly when connected to the inverter's AC output. See WARNING below.

WARNING: Risk of electric shock. Use only the following GFCIs [receptacle(s) or circuit breaker(s)]: Leviton #8899-A, N7899, GFNT1 and GNNT2. Other types may fail to operate properly when connected to this inverter.

2.3.4 AC Input and Output Wiring Connections

The MS-PAE Series inverter/charger has a six-connection AC terminal block and two AC ground terminals that are used to connect the inverter's AC input/output wiring. To access the AC terminal block and the ground terminals, remove the two Phillips screws that hold the AC access cover plate to the left side of the inverter (see Figure 1-3, Item 15).

Each connection on the AC terminal block is rated for 221°F (105°C) and can accept a #18 to #4 AWG (0.82 to 21.1 mm^2) CU solid/stranded wire. Each connection uses a set screw with slot-head, and the recommended tightening torque is 16 in lbf (1.8 Nm).

Each AC ground terminal can accept one #14 to #6 AWG (2.1 to 13.3 mm^2) stranded wire. Recommended tightening torque is 45 in lbf (5.1 Nm).

Info: The two neutral terminals are common to each other and can be used in any combination or order. In a residential application, it is often easier to connect only one AC neutral wire to the inverter and make the other neutral connections at a central point, such as in the AC electrical panel.

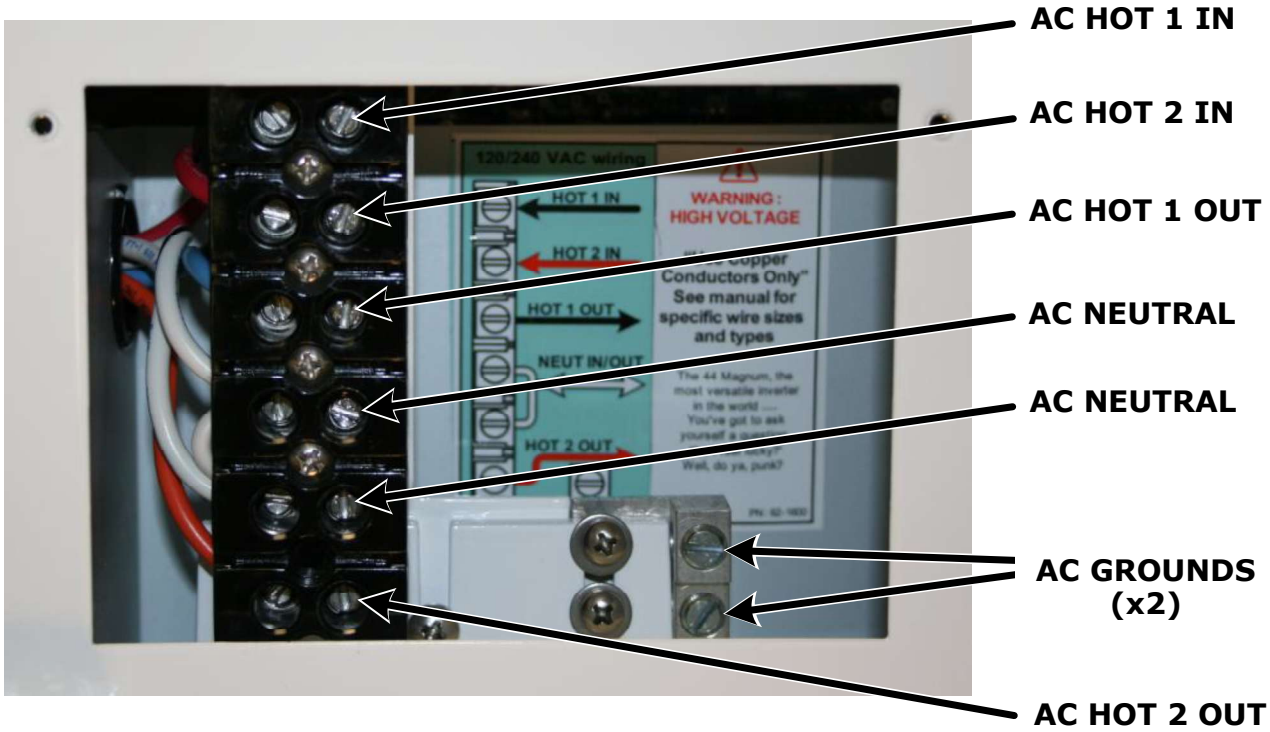

Figure 2-8, AC Terminal Block

2.3.5 Wiring the AC Input and Output

The MS-PAE provides 120/240 VAC on the output, but the input may be wired either as a 120/240 VAC input or a 120 VAC input (to one input only) depending on the AC source. The AC output continues to produce 120/240 VAC with either the 120/240 VAC or 120 VAC input configuration.

WARNING: DO NOT connect 120 VAC (same phase) to both AC HOT 1 IN and AC HOT 2 IN inputs. These inputs must be 180° out-of-phase (i.e., 120/240 VAC). If you only have a 120 VAC source, you may connect to either the AC HOT 1 IN or AC HOT 2 IN, but NOT to both or damage may occur.

WARNING: Before making any AC connections, make sure the inverter is disconnected from the battery bank and that no AC power is connected to the inverter.

Info: If providing only 120 volts to the inverter input, the charger must be turned down to 50% to prevent overheating from occurring.

CAUTION: The inverter's AC output must never be connected to an AC power source. This could cause severe damage to the inverter and is not covered under warranty.

Info: Torque the six-connection AC terminal block screws to 16 in lbf (1.8 Nm). Torque the two AC ground terminal screws to 45 in lbf (5.1 Nm).

The following steps are basic guidelines for installing and connecting AC wiring directly from a main panel into a MS-PAE Series inverter, and from the inverter directly to a sub-panel.

Note: *If you are installing the MS-PAE inverter(s) on a MMP/MP enclosure, refer to the respective enclosure owner's manual for all AC wiring instructions (as an example, Figure 2-9 shows the AC wiring for a MS-PAE inverter installed on a MMP enclosure).*

1. Remove the two Phillips screws on the AC wiring compartment cover (Figure 1-3, Item 15) to access the internal AC terminal block.

Wiring the Inverter AC Input (from the main panel)

2. a) *For a 120/240 VAC input*: Connect the hot 1 wire (black) from the main panel's dedicated dual-pole circuit breaker to the inverter's HOT 1 IN terminal, and then connect the hot 2 wire (red) from the main panel's dual-pole circuit breaker to the inverter's AC HOT 2 IN terminal.
   b) *For a 120 VAC input*: Connect the hot wire (black) from the main panel's dedicated dual-pole circuit breaker to the inverter's AC HOT 1 IN or AC HOT 2 IN terminal, but NOT both or damage may occur.

   CAUTION: If using only a 120 VAC input source, you will need to turn the charge rate down to 50% using a remote control (i.e., ME-RC, ME-ARC or ME-RTR). This prevents the inverter from overheating because of a transformer imbalance when charging the battery bank and running loads from both the HOT 1 and HOT 2 outputs.

3. Connect the neutral (white) wire from the main panel's neutral busbar to one of the inverter's AC NEUTRAL terminals (both of the inverter's AC NEUTRAL terminals are common to each other).
4. Connect the safety ground (green) wire from the main panel's ground busbar to one of the inverter's AC GROUND terminals.

Wiring the Inverter AC Output (to the sub-panel)

5. Connect the sub-panel's hot 1 (black) wire to the inverter's AC HOT 1 OUT terminal, and then connect the sub-panel's hot 2 (red) wire to the inverter's AC HOT 2 OUT terminal.
6. Connect the sub-panel's neutral (white) wire to the inverter's open AC NEUTRAL terminal.
7. Connect the sub-panel's ground (green) wire to the inverter's open AC GROUND terminal.

Final Inspection

Gently pull on the wires to ensure they are securely held, and ensure no bare wire is exposed.

The AC input and output wiring in the MS-PAE Series inverter should be complete. Prior to re-attaching the AC access cover, review all AC wiring to ensure all connections are correct and secure.

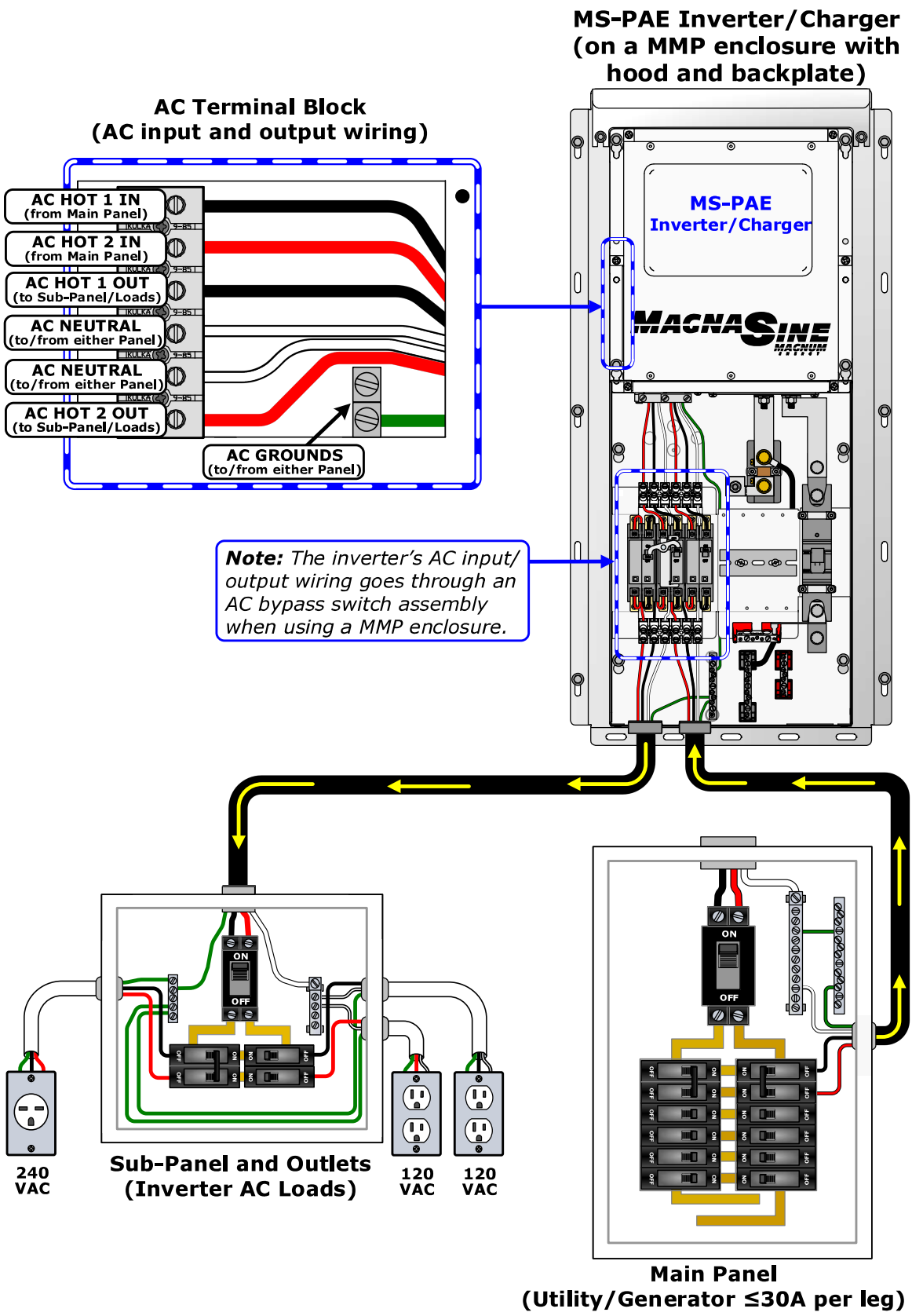

Figure 2-9, AC Wiring (Single unit on a MMP enclosure)

2.3.6 Using the MS-PAE with Three-Phase Power

The MS-PAE inverter's AC input is designed to be connected to 120 VAC single-phase or 120/240 VAC split-phase power. On a 120/240 VAC split-phase power system, there are two 120-voltage phases (also known as "legs" or "lines") that are 180° apart with a neutral connection centered between them. The voltage between the two 120 VAC legs (L-L) is 240 VAC, and the voltage between each of the legs and neutral (L-N) is 120 VAC.

In industrial and some larger commercial installations, three-phase power is used. On a three-phase power system (that can be either in a Delta or WYE/Star configuration), there are three individual phases ("legs" or "lines") that are 120° apart. The voltage between any two legs is 208 VAC (L-L), and if the system has a neutral wire, the voltage between one leg and neutral (L-N) is 120 VAC.

If you only have 208 VAC three-phase power—either from the utility or from a generator—there are two options to connect this three-phase power to the MS-PAE inverter's input. Depending on requirements, you can either use an appropriate buck-boost transformer or you can connect to the MS-PAE inverter directly.

Note: *Be aware that most buck-boost transformers are not isolated, but are autotransformers—which will not work. An autotransformer requires fewer windings and has a smaller core, so it is typically lighter and less costly than a conventional isolation transformer with the same ratings. However, with an autoformer, the primary (input) and secondary (output) windings are physically interconnected. Since the primary and secondary windings of an autoformer are not isolated from each other, and the entire system has a common ground, you would not be able to connect two legs of the three-phase system to the MS-PAE inverter. When the input (or primary) side and output (or secondary) side of the autoformer have a common reference (normally ground), a high in-rush of current will occur after the MS-PAE Series inverter connects to the three phase system. This excessive current happens when the transformer inside the inverter tries to move the two incoming legs that are 120° out-of-phase (from the three-phase source input) to 180° out-of-phase (split-phase inverter output). This phase mismatch will cause the inverter's input 30-amp breaker(s) to open and may cause other damage to the inverter.*

2.3.6.1 Connecting the MS-PAE using a Buck-Boost Transformer

A buck-boost transformer is designed to decrease (buck) or increase (boost) line voltage. As shown in Figure 2-10, to connect to the MS-PAE input, the buck-boost transformer must be capable of connecting 208 VAC on the primary side and step-up (or boost) to 240 VAC on the secondary side. This transformer must include a center-tapped connection on the secondary side to provide both 120 and 240 volts to the MS-PAE inverter, and must have the primary winding isolated from the secondary winding to ensure there is no phase mismatch.

Links to some transformer manufacturers are listed below:

www.acmetransformer.com
www.hamondpowersolutions.com

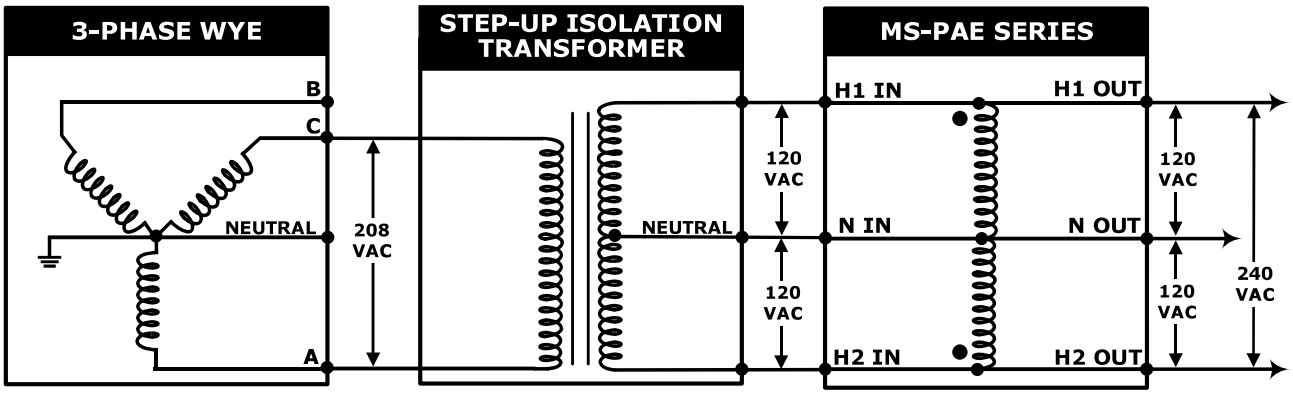

Figure 2-10, Connecting the MS-PAE to Three-Phase Power using a Buck-Boost Transformer

2.3.6.2 Connecting the MS-PAE Directly

If an isolation transformer is not available, as an alternative option, part of the three-phase source can be connected directly. This is done by connecting only one phase to neutral from the three-phase source to one of the inputs to neutral on the MS-PAE inverter, as shown in Figure 2-11. Even though you are only providing 120 VAC—by using only one of the three phases to neutral—the inverter will continue to provide 120/240 VAC on the output because of the step-up transformer design inside the inverter.

Info: If providing only 120 volts to the inverter input, the charger must be turned down to 50% to prevent overheating from occurring.

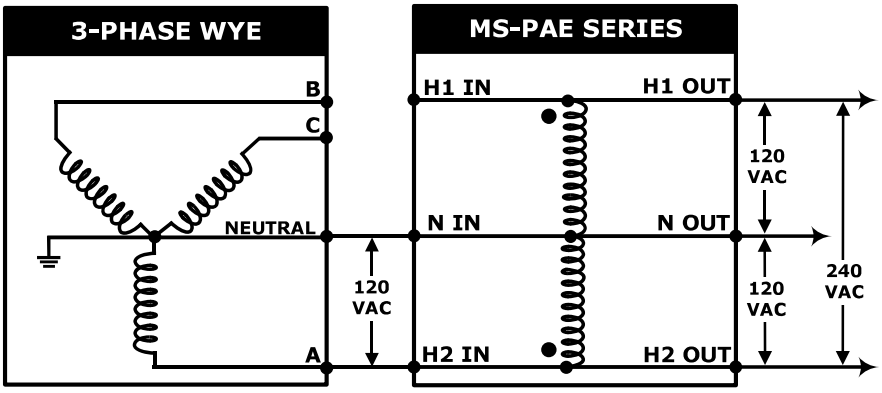

Figure 2-11, Connecting the MS-PAE Directly to Three-Phase Power

2.4 Grounding Inverters

The MS-PAE Series inverters use two separate electrical systems (AC and DC power), therefore each electrical system is required to be properly connected to a permanent, common "ground" or "earth" reference. An inverter system that is properly grounded limits the risk of electrical shock, reduces radio frequency noise, and minimizes excessive surge voltages induced by lightning. To understand how the conductors in the electrical circuit will be connected to the system ground, the following terms should be understood (use Figure 2-12 as a reference):

- **Grounded Conductor (GC):** The wire/cable in the electrical system that normally carries current (usually AC neutral and/or the DC negative); and is intentionally connected or "bonded" to the ground system. This wire, or the ends of this wire, should be colored white or gray.
- **Equipment Grounding Conductor (EGC):** A wire/cable that does not normally carry current and is used to connect the exposed metal parts of equipment—that might be accidentally energized—to the grounding electrode system or the grounded conductor. This wire or the ends of this wire should be green or green with a yellow stripe, or this wire can be bare copper.
- **Grounding Electrode Conductor (GEC):** The wire/cable that does not normally carry current, and connects the grounding electrode at the service equipment to the grounded conductor and/or the equipment grounding conductor.
- **Grounding Electrode (GE):** A ground rod or conducting element that establishes an electrical connection to the earth or common ground reference.
- **System Bonding Jumper** (**SBJ**)**:** The connection between the grounded circuit conductor in the electrical system and the equipment grounding conductor at a separately derived system.

There are two types of grounding – equipment grounding and system grounding.

Equipment Grounding – The exposed metal parts of equipment in a system usually don't carry electricity. However, if exposed metal becomes electrified by a live wire, a person touching this live part could complete the electrical circuit and receive a shock. Equipment grounding prevents shock by connecting all the exposed metal parts of equipment (via Equipment Grounding Conductors –EGC) together at a common ground point (Ground Busbar–GBB). This common ground point—installed in the service disconnect panel for each electrical system (AC and DC)—is then connected (via Grounding Electrode Conductor–GEC) to the common ground reference, such as a ground rod (Grounding Electrode–GE). This connection to earth is made at only one point in each electrical system; otherwise, parallel paths will exist for the currents to flow. These parallel current paths would represent a safety hazard and are not allowed in installations wired per the NEC/CEC.

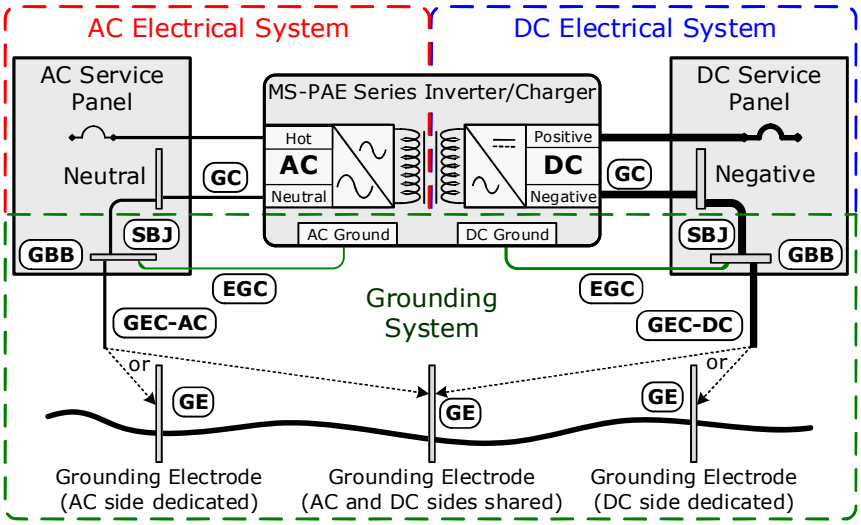

Figure 2-12, Grounding System for MS-PAE Series

System Grounding – Takes one of the current-carrying conductors (Grounded Conductor–GC) and attaches it to the common ground point (Ground Busbar–GBB), usually by a System Bonding Jumper (SBJ) in each electrical service disconnect panel. On the DC side that is the negative conductor; on the AC side it's the neutral conductor. The closer the grounding connection is to the source, the better the protection from surges due to lightning.

2.4.1 Sizing the Grounding Electrode Conductors (GEC)

AC Side – The size of the AC grounding electrode conductor (GEC–AC) depends on the size of the largest ungrounded conductor feeding the AC load center. A #8 AWG (8.4 mm^2) copper conductor will serve as an AC grounding electrode conductor for AC power conductors smaller than and including #2 AWG (33.6 mm^2) copper. See Table 2-3 for additional values.

Table 2-3, AC Grounding Electrode Conductor (GEC–AC) Sizing

Size of Largest Ungrounded Conductor (Copper)	Minimum Size of Grounding Electrode Conductor (Copper)
2 AWG (33.6 mm^2) or smaller	#8 AWG (8.4 mm^2)
1 AWG (42.4 mm^2) or 1/0 AWG (53.5 mm^2)	#6 AWG (13.3 mm^2)
2/0 AWG (67.4 mm^2) or 3/0 AWG (85.0 mm^2)	#4 AWG (21.1 mm^2)
Over 3/0 AWG (85.0 mm^2) through 350 kcmil	#2 AWG (33.6 mm^2)

DC Side – To size the DC grounding electrode conductor (GEC–DC), you must first determine which one of the following three methods will be used to connect the DC and AC grounding points in the inverter's two electrical systems to the common "earth" ground:

Method 1 (see Figure 2-13): This method uses a separate grounding electrode (GE) for the DC system and the AC system. In this method—since there are multiple connections to the DC grounding electrode (GE)—the size of the DC grounding electrode conductor (GEC–DC) cannot be smaller than the largest conductor in the DC system (usually the battery-to-inverter cable).

The DC grounding electrode (GE) must be bonded to the AC grounding electrode (GE) to make a grounding electrode system; this bonding conductor (BC) cannot be smaller than the largest grounding electrode conductor—either AC or DC.

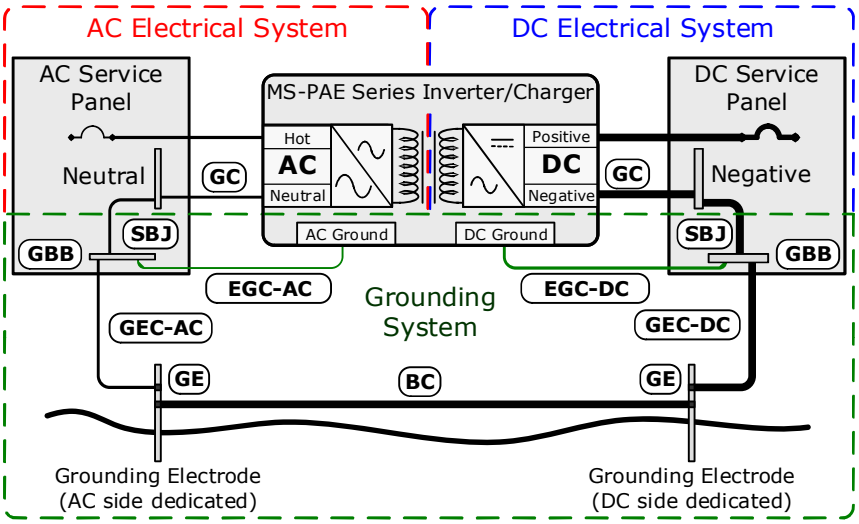

Figure 2-13, Method 1 – DC Ground Rod with Multiple Connections (using multiple grounding electrodes)

Method 2 (see Figure 2-14): When the AC and DC service panels are near each other, then the AC grounding electrode conductor (GEC–AC) and DC grounding electrode conductor (GEC–DC) can be connected to a single grounding electrode (GE). In this method—since there are multiple connections to the DC grounding electrode—the size of the DC grounding electrode conductor (GEC–DC) cannot be smaller than the largest conductor in the DC system (usually the battery-to-inverter cable).

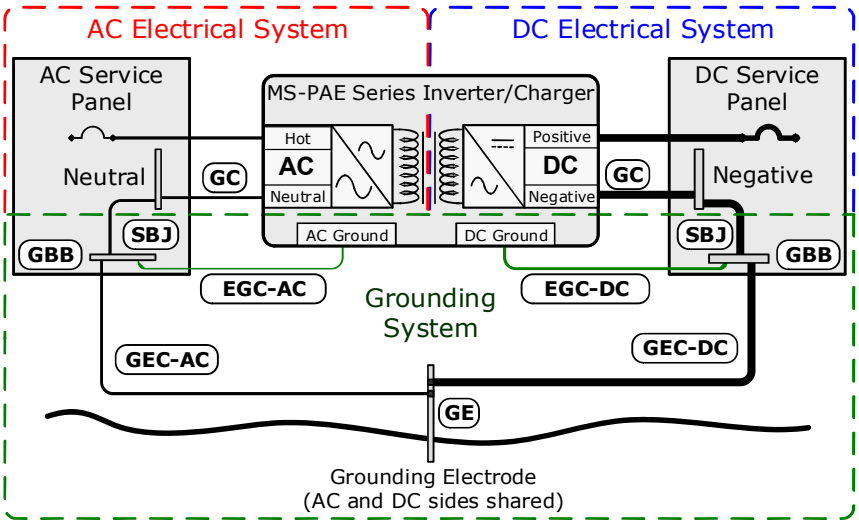

Figure 2-14, Method 2 – DC Ground Rod with Multiple Connections (using a single grounding electrode)

Method 3 (see Figure 2-15): The AC grounding electrode conductor (GEC–AC) is bonded to the DC ground point and the DC grounding electrode conductor (GEC–DC) is the *only connection* to the grounding electrode (GE), which must be a rod, pipe, or plate electrode.

In this method, since there is only one connection to the ground rod, the DC grounding electrode conductor (GEC–DC) is not required to be larger than #6 AWG (13.3 mm^2) copper. The reasoning for allowing this smaller grounding electrode conductor is that it is only required to stabilize the system voltage with respect to earth, and the other properly-sized conductors in each electrical system will safely carry any fault currents if they occur.

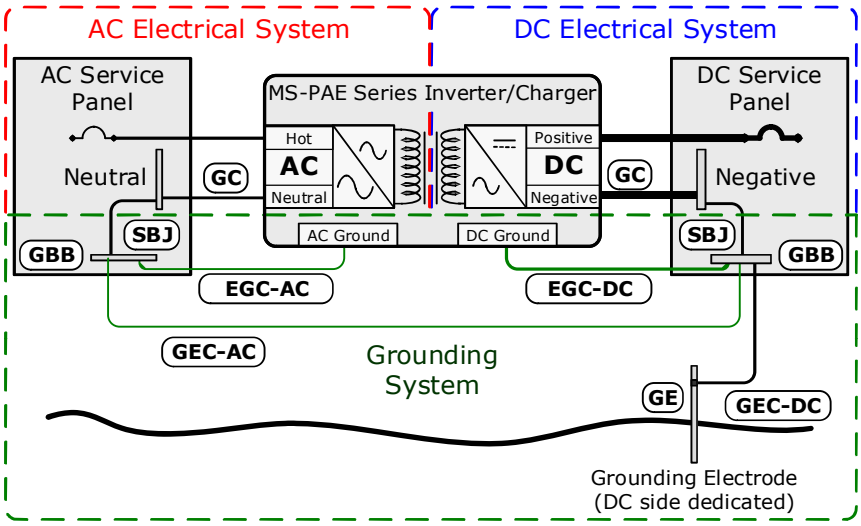

Figure 2-15, Method 3 – DC Ground Rod with Single Connection

2.4.2 System Bonding Jumper

The MS-PAE Series inverter/charger does not include an internal bond between the grounded conductor (AC neutral/DC negative) and the equipment grounding terminals. This bond [System Bonding Jumper (SBJ)] is usually done in the main distribution panel for each electrical system.

CAUTION: There should be one and only one point in each electrical system (both AC and DC) where the grounded conductor is attached to the grounding electrode conductor.

AC Side – The size of the system bonding jumper (SBJ) in the AC electrical system is based on the area of the largest AC ungrounded conductor. In accordance with the NEC, use Table 2-3 to determine the system bonding jumper size compared to the largest AC ungrounded conductor.

DC Side – The size of the system bonding jumper (SBJ) in the DC electrical system must not be smaller than the DC grounding electrode conductor (GEC–DC) used, which is determined from the grounding method that will be used (see Section 2.4.1).

2.4.3 Equipment Grounding Conductor

The inverter case and all other non-current-carrying exposed metal surfaces in the entire electrical system that may be accidentally energized must be grounded. The equipment-grounding conductor must be sized to safely carry the maximum ground-fault current likely to be imposed on it from where a ground-fault may occur. In accordance with the NEC, use Table 2-4 to size the equipment grounding conductors. This table requires that the equipment-grounding conductor be sized according to the rating of the overcurrent device protecting the circuit.

CAUTION: The connections and wiring for the equipment-grounding conductor must be continuous to allow fault currents to properly operate overcurrent devices. Where equipment is removed, and this disconnects the bonding connection between the grounding electrode conductor and exposed conducting surfaces, a bonding jumper must be installed while the equipment is removed.

AC Side – Where the AC output from the inverter is connected to an AC load center, there should be an equipment grounding conductor connected between the inverter case and the grounding point in the AC load center. The AC equipment grounding conductor (EGC–AC) is sized per Table 2-4 and is connected to the inverter's AC equipment grounding terminal shown in Figure 2-8.

DC Side – Since the currents on the DC side are higher than the AC side (5 times at 24 volts, 2.5 times at 48 volts), the equipment grounding needs are different. The DC equipment grounding conductor (EGC–DC) is sized per Table 2-4, and is connected to the DC equipment grounding terminal on the inverter (see Figure 1-2, Item 7).

Table 2-4, Equipment Grounding Conductor (EGC) Sizing

Rating of Overcurrent Device	Minimum Size of Copper Ground Wire
15 amps	#14 AWG (2.1 mm^2)
20 amps	#12 AWG (3.3 mm^2)
30 to 60 amps	#10 AWG (5.3 mm^2)
100 amps	#8 AWG (8.4 mm^2)
200 amps	#6 AWG (13.3 mm^2)
300 amps	#4 AWG (21.1 mm^2)
400 amps	#3 AWG (26.6 mm^2)

2.5 Installing Lightning Arrestors

Unfortunately, in Renewable Energy (RE) systems where components are wired to outdoor electrical systems, there is a greater chance of damage to these components from lightning strikes. Lightning does not have to strike directly to cause damage, it can be far away and still induce power surges or spikes in the wires of the RE system. Since the RE wires are connected to the conductors coming into the house the inverters, charge controllers, batteries, and other components in the house or power shed are easily susceptible to damage.

The best line of defense against these high voltage surges—caused by lightning—is to ensure you have proper system grounding. Proper grounding attempts to divert lightning surges to earth, instead of going through your electrical components. However, for additional protection in lightning-prone areas or where good grounding is not feasible, install lightning arrestors (also known as high voltage surge arrestors) on the DC and AC circuits of your renewable energy system. Lightning arrestors are devices that respond to voltage variations instantaneously, effectively intercepting potentially damaging spikes and surges and reducing them to acceptable power levels to protect electrical equipment. Metal Oxide Varistors (MOVs), Silicone Oxide Varistors (SOVs), and Zinc Oxide Non-linear Resistors (ZNRs) are three types of lightning/surge arrestors.

Install the lightning arrestors as close as possible to the equipment you are trying to protect. Install additional lightning protection (secondary lightning arrestor) if equipment is more than 60 feet away from where the primary lightning arrestor is connected.

Info: For more information on lightning protection in RE systems, review "Protection Against the Effects of Lightning on Standalone Photovoltaic Systems – Common Practices" at www.iea-pvps.org.

2.6 Inverter Warning Label

A warning label is provided (Figure 2-16) to inform all personnel that an inverter is installed in your electrical system. Affix this label in a clearly visible location at the electrical panel that is being powered by the inverter. Posting of this warning label is necessary because it might be falsely assumed that the panel is no longer "hot" after the AC power has been shut off, when in fact power may actually still be available due to the inverter automatically powering the panel.

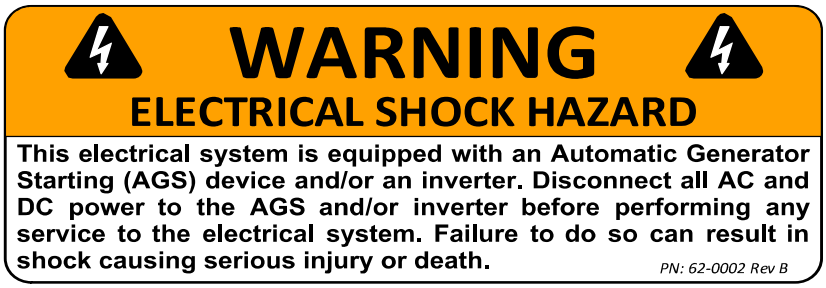

Figure 2-16, Warning Label

2.6.1 Inverter Power Identification and Disconnect Location Requirements

When an inverter is installed in a building, facility or structure, the NEC (National Electrical Code) requires a label or plaque to be provided. This label/plaque is required to be easily visible and provide information that informs personnel on the location of all electrical system disconnects. This is to ensure all power to a building is quickly located and shut down in an emergency. There are also specific requirements for this label/plaque depending on the inverter application, they are:

(A) *Facilities with Standalone Systems*: Any building, facility, or structure with a photovoltaic power system that is not connected to a utility service source and is a standalone system must have a permanent plaque or directory installed on the exterior of the building or structure at a readily visible location acceptable to the Authority Having Jurisdiction (AHJ). The plaque or directory must provide the location of system disconnecting means and information regarding whether the structure contains a standalone electrical power system.

(B) *Facilities with Utility Services and PV Systems*: Buildings, facilities, or structures with both utility service and a photovoltaic system must have a permanent plaque or directory providing the location of the service disconnecting means and the photovoltaic system disconnecting means if they are not located at the same location.

2.7 Final Inspection

1. Verify all cables/conduit runs are secured with wire ties or other non-conductive fasteners to prevent chafing or damage from movement and vibration.
2. Verify strain reliefs or grommets are in place to prevent damage to the wiring or conduit where it passes through walls, bulkheads, or other openings.
3. Verify all AC connections are correct and torqued to a maximum of 16 in lbf (1.8 N-m).
4. Replace the covers on the main electrical/distribution panel.
5. Replace the chassis access cover.

Info: If required by code, have the installation inspected by an electrical inspector.

2.8 Functional Test for a Single MS-PAE Inverter

After all electrical connections to the AC source, main panel, inverter, batteries and sub-panel have been completed, follow these steps to test the installation and the inverter's operation.

CAUTION: Use a multimeter to verify the correct DC voltage for your particular inverter model (i.e., 48-volt battery bank for a 48-volt inverter), and to ensure the polarity of the battery voltage is correct (battery positive connected to inverter positive terminal, and battery negative connected to inverter negative terminal).

1. Apply battery power to the inverter by closing the DC circuit-breaker. The inverter remains OFF, but the green status indicator on the front of the inverter quickly blinks once to indicate that DC power has been connected and the inverter is ready to be turned on.
2. Prior to turning on the inverter, make sure all AC loads (i.e., appliances) are NOT connected to the inverter's output or to any AC outlets powered by the inverter.
3. Lightly press and release the inverter's ON/OFF switch to turn on the inverter. Verify the inverter's status indicator is blinking—indicating the inverter is on.
4. Connect a ≥10-watt light bulb to the inverter output, and then verify it comes on and shines normally. DO NOT connect anything but a light bulb until all wiring and voltages are confirmed to be correct.

   Info: The inverter's AC output voltage will not be correct until a >5-watt load (5 watts is default setting) is connected to the inverter, or Search mode is turned off with a remote display. The 10-watt or greater light bulb is used because it is a sufficient load to bring the inverter out of Search mode and up to full voltage.

5. Check the AC output voltage of the inverter by connecting an AC voltmeter to the output terminals as shown in Figure 2-17, and then verify the correct output voltages.
6. Press and release the inverter's ON/OFF switch to turn off the inverter. The inverter's status indicator and the connected load should go off.
7. Apply AC power to the inverter's AC input. After the AC input power is qualified (approximately 15 seconds), the incoming AC power transfers through the inverter to the inverter's AC output and powers the light bulb. Verify the inverter's status indicator and that the light bulb comes on.
8. Even though the light bulb is on, the inverter is currently disabled (off). Press and release the ON/OFF switch on the inverter to enable (turn on) the inverter.
9. Disconnect the incoming AC power to the inverter. Verify the light bulb remains on and is now is powered by the inverter.

If the inverter passes all the above steps, the inverter is ready for use. If the inverter fails any of the steps, refer to the Troubleshooting section.

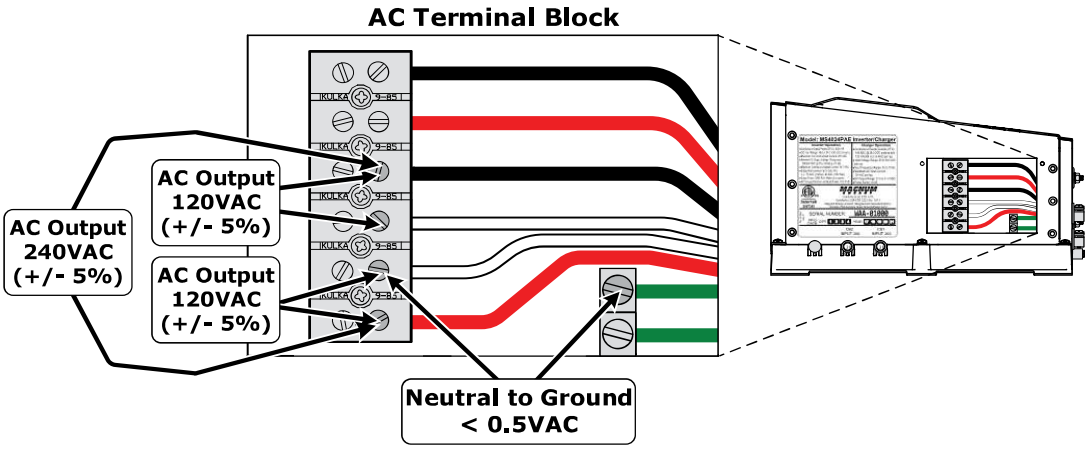

Figure 2-17, AC Voltage Checks

3.0 Operation

The MS-PAE Series inverter has two normal operating routines: 1) Inverter mode, which powers your loads using the batteries, and 2) Standby mode, which transfers the incoming AC power (i.e., utility power or a generator) to power your loads and uses this incoming power to recharge the batteries. This inverter also includes an extensive protection circuitry to shut down the inverter under certain fault conditions.

3.1 Inverter Mode

When the MS-PAE series is first powered up, it defaults to the OFF mode. The momentary ON/OFF power switch (Figure 1-1, Item 1) must be lightly pressed to turn the inverter ON. Subsequently, pressing this switch alternately turns the inverter off and on.

Inverter OFF: When the inverter is off no power is used from the batteries to power the AC loads, and the status LED will be off. If AC power from an external source (utility or generator) is connected and qualified on the inverter's AC input, this AC input power will pass through the inverter to power the AC loads. However, if this AC power is lost, the AC loads will no longer be powered because the inverter is off.

When the inverter is turned on, it operates either by "Searching" or "Inverting", depending on the connected AC loads.

Searching: When the inverter is first turned on, the automatic Search feature is enabled. This feature is provided to conserve battery power when AC power is not required. In this mode, the inverter pulses the AC output looking for an AC load (i.e., electrical appliance). Whenever an AC load (greater than 5 watts) is turned on, the inverter recognizes the need for power and automatically starts inverting. When there is no load (or less than 5 watts) detected, the inverter automatically goes back into Search mode to minimize energy consumption from the battery bank. When the inverter is "Searching", the inverter's green LED flashes (medium flash).

Info: The factory default value for the Search feature is 5 watts, it can be turned off or adjusted from 5 to 50 watts using the ME-RC or ME-ARC remote display.

Inverting: When a load greater than 5 watts is connected to the inverter output, the MS-PAE series "inverts" the DC power from the battery and supplies 120/240 VAC power to your sub-panel. The inverter's green LED flashes once every second (medium flash) to indicate it is inverting. The amount of time the inverter can be inverting and providing power is directly related to the amount of AC loads that are connected, and the capacity of the battery bank. Refer to Figure 3-1 to see the flow of power from the DC input to the AC output while in Inverter mode.

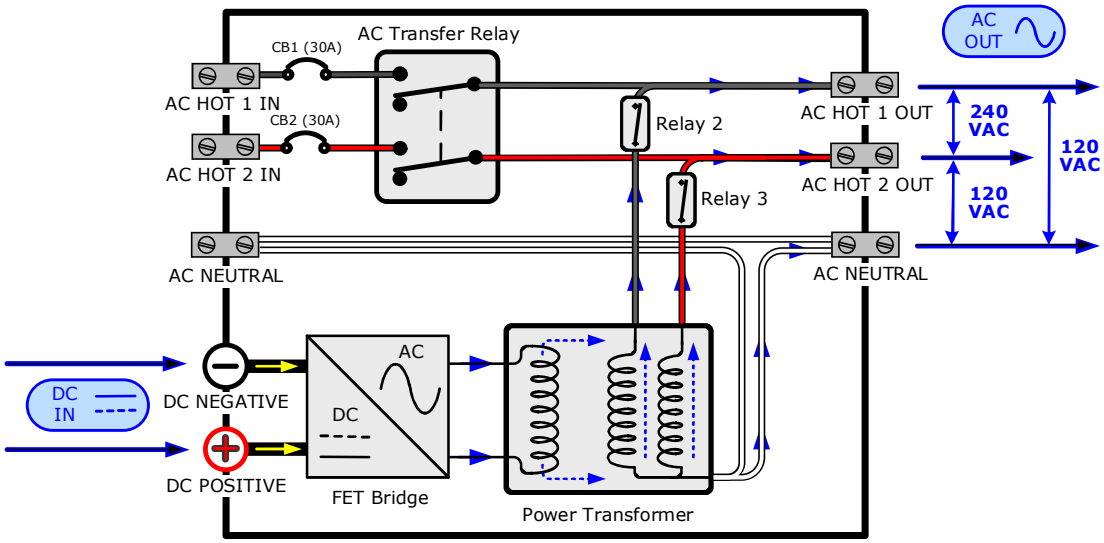

Figure 3-1, Power Flow – Inverter Mode

3.2 Standby Mode

The MS-PAE Series uses an automatic transfer relay and an internal battery charger when operating in Standby mode. Standby mode begins whenever AC power (utility or generator) is connected to the inverter's AC input. Once the AC voltage and frequency of the incoming AC power is within the AC input limits, the automatic AC transfer relay is activated. This transfer relay passes the incoming AC power through the inverter to power the AC loads on the inverter's output. This incoming power is also used to activate a powerful internal battery charger to keep the battery bank charged in case of a power failure. Refer to Figure 3-2 to see the flow of power from the AC input to the DC and AC output while in Standby mode.

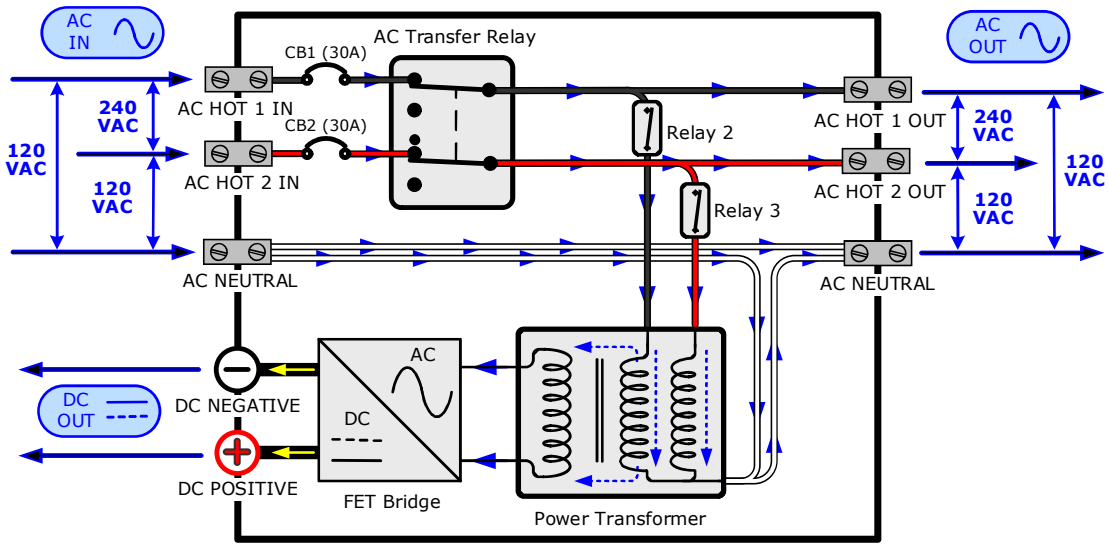

Figure 3-2, Power Flow – Standby Mode

3.2.1 Battery Charging

The MS-PAE Series is equipped with an active PFC (Power Factor Corrected) and PI (Proportional-Integral) multistage battery charger. The PFC feature is used to control the amount of power used to charge the batteries in order to obtain a power factor as close as possible to 1 (or unity). This causes the battery charger to look like a resistor to the line (forces the charge current waveshape to mirror the voltage waveshape). The PI feature allows the charger voltage and current to change independently. These two features maximize the real power available from either utility or generator AC power sources, which translates into less power wasted and greater charging capabilities than most chargers available today.

When an AC source is connected to the AC input, the inverter begins monitoring for acceptable AC voltage. Once the inverter has accepted this AC voltage, the AC transfer relay closes and Charge mode begins. After Charge mode begins, the DC voltage is monitored to determine the charging stage. If the DC voltage is low (≤25.6/24-volt models or ≤51.2/48-volt models), the charger begins Bulk Charging. If the DC voltage is high (>25.6/24-volt models or >51.2/48-volt models), the charger will skip the Bulk and Absorb charging stages and go directly to Float Charging.

The multistage charger can use up to five different charging stages to help monitor and keep the batteries healthy. The five stages include an automatic 4-stage charging process: Bulk, Absorb, Float, and Full Charge; and a manual Equalization (EQ) charge stage. The automatic 4-stage charge process provides complete recharging and monitoring of the batteries without damage due to overcharging. The EQ stage (requires a remote control to enable Equalization charge) can be used to stir up stratified electrolyte and to reverse battery plate sulfation that may have occurred—if recommended by your battery manufacturer.

While charging, the unit may go into Charger Back-off protection, which automatically reduces the charge current to the batteries. This is caused by: 1) The internal temperature is too hot – the charger automatically reduces the charge rate to maintain temperature; or 2) The AC input voltage

falls below 170 VAC (or 85 VAC on either leg) – the charger stops charging to help stabilize the incoming AC voltage.

The Charge mode provides up to four separate charging stages: Bulk Charging, Absorb Charging, Float Charging, and Full Charge.

- **Bulk Charging:** This is the initial stage of charging. While bulk charging, the charger supplies the battery with controlled constant current. The charger will remain in bulk charge until the absorption charge voltage (determined by the Battery Type selection*) is achieved. The inverter's green LED stays on (solid) to indicate bulk charging.
- **Absorb Charging:** This is the second charging stage and begins after the absorb voltage has been reached. Absorb charging provides the batteries with a constant voltage and reduces the DC charging current in order to maintain the *Absorb Voltage* setting. The inverter's green LED flashes once every second (fast flash) to indicate absorption charging for 2 hours (determined by the Battery AmpHrs selection*), then switches to float charging.
- **Float Charging:** The third charging stage occurs at the end of the absorb charging time. While float charging, the charge voltage is reduced to the float charge voltage (per the Battery Type selection*). In this stage, the batteries are kept fully charged and ready if needed by the inverter. The inverter's green LED flashes once every 8 seconds (slow flash) to indicate float charging. The Float Charging stage reduces battery gassing, minimizes watering requirements (for flooded batteries), and ensures the batteries are maintained at optimum capacity.
- **Full Charge (Battery Saver™ mode):** The fourth stage occurs after four hours in the Float Charging stage. The Full Charge stage is designed to keep batteries fully charged over long periods, and to prevent excessive loss of water in flooded batteries or drying out of GEL/AGM batteries. In this stage, the charger is turned off and begins monitoring the battery voltage. If the battery voltage drops low (25.4 VDC or less on 24-volt models, or 50.8 VDC or less on 48-volt models), the charger automatically initiates another four hours of float charging.

Info: If the battery voltage falls to the rebulk voltage (24.2V on 24-volt models or 48.4V on 48-volt models) or lower, the unit will begin another bulk charge.

** These settings in the MS-PAE Series leave the factory with default values (see Table 3-2, Inverter/ Charger Default Values). These default values are adequate for most installations, however if you determine that some of the values are not adequate they can be changed for your particular system. The ME-RC50 or ME-ARC remote control may be purchased to adjust these settings.*

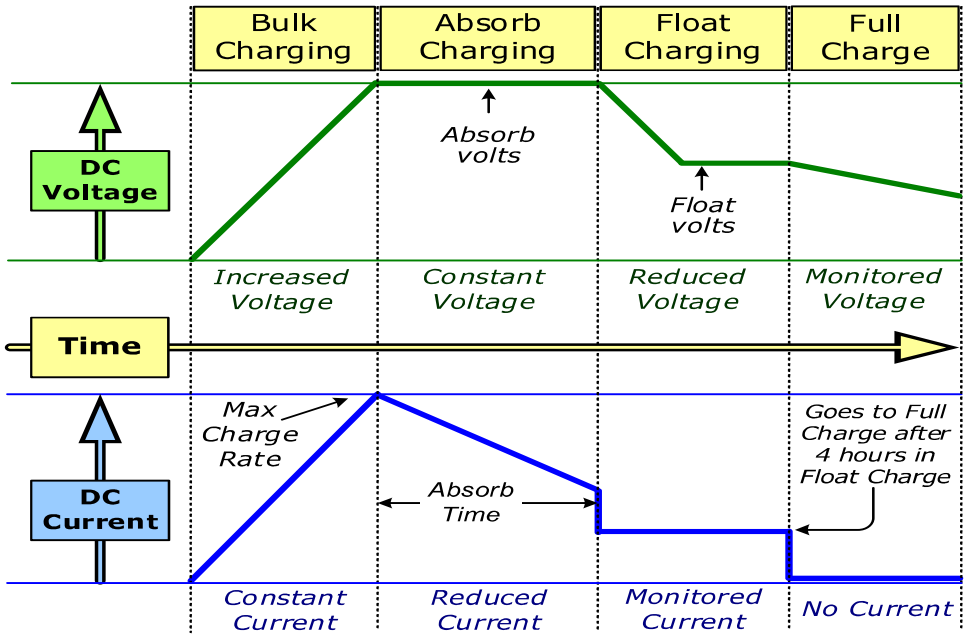

Figure 3-3, Automatic 4-Stage Charging Graph

3.2.2 Transfer Time

While in Standby mode, the AC input is continually monitored. Whenever AC power falls below the VAC dropout voltage (80 VAC per leg – default setting), the inverter automatically transfers back to Inverter mode with minimum interruption to any connected appliances—as long as the inverter is turned on. The transfer from Standby mode to Inverter mode occurs in approximately 16 milliseconds. While the MS-PAE Series is not designed as a computer UPS system, this transfer time is usually fast enough to hold them up. However, the *VAC Dropout* setting has an effect on the ability of the loads to transfer without resetting. The lower this setting, the longer the effective transfer will be and therefore, the higher the probability for the output loads to reset. This occurs because the incoming AC voltage is allowed to fall to such a low level that when the transfer does occur (in addition to the relay transfer time) the voltage on the inverter's output has already fallen to a low enough level to reset the loads.

The disadvantage of a higher *VAC Dropout* setting is that smaller generators (or large generators with an unstable output) may nuisance transfer. This commonly happens when powering loads that are larger than the generator can handle—causing the generator's output to constantly fall below the inverter's input VAC dropout threshold.

Info: When switching from Inverter mode to Standby mode, the inverter waits approximately 15 seconds before transferring to ensure the AC source is stable.

3.3 Battery Temperature Sensor Operation

The plug-in Battery Temperature Sensor (BTS) is used to determine the temperature around the batteries. This information allows the multistage battery charger to automatically adjust the battery charge voltages for optimum charging performance and longer battery life.

When the BTS is installed, the charge voltage while in the Bulk, Absorb or Float charge mode will either increase or decrease if the battery temperature is greater or lower than 77°F (25°C). If the temperature around the BTS is below 77°F (25°C) the charge voltage increases and if the temperature around the BTS is higher than 77°F (25°C), the charge voltage decreases. The farther the temperature change from 77°F (25°C), the greater the change in the charging voltage. See Figure 3-4 to determine how much the charge voltage changes (increases or decreases) depending on the temperature reading of the BTS. For example, the nominal absorb charge voltage for a flooded battery at 77°F (25°C) on a 24-volt model is 29.2 VDC. If the battery temperature is 95°F (35°C), the absorb charge voltage would decrease to 28.6 VDC (29.2 nominal – 0.6 change).

If the temperature sensor is NOT installed, the charge voltages will not be compensated and the battery charges at a temperature of 77°F (25°C). Without the BTS installed, the life of the batteries may be reduced if they are subjected to large temperature changes.

Info: The temperature to voltage compensation slope the BTS uses is 5mV/°C/Cell from 0 to 50°C.

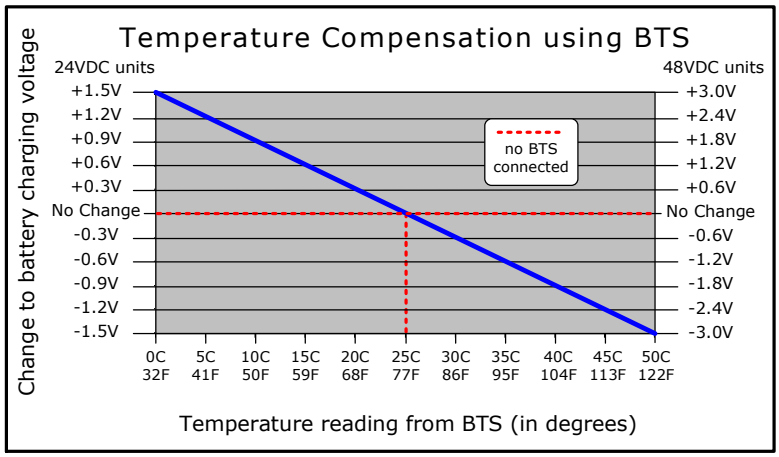

Figure 3-4, BTS Temperature to Charge Voltage Change

3.4 Protection Circuitry Operation

The inverter is protected against fault conditions and in normal usage it will be rare to see any. However, if a condition occurs that is outside the inverter's normal operating parameters, then it will shut down and attempt to protect itself, the battery bank, and your AC loads. If the inverter shuts down, it may be due to one of the following conditions (also refer to the Troubleshooting section to help diagnose and clear the fault condition).

- **Low Battery** – The inverter will shut off whenever the battery voltage falls to the **LBCO** (Low Battery Cut Out) level to protect the batteries from being over-discharged. After the inverter has reached the LBCO level and has turned off, it will automatically restart after one of the following conditions:
  1. AC power is applied and the inverter begins operating as a battery charger.
  2. Battery voltage rises to the **LBCI** (Low Battery Cut In) level.

  The inverter's status LED turns off when a low battery fault condition occurs. Refer to Table 3-1 to determine the LBCO and LBCI levels for your inverter model.
- **High Battery** – In the event the battery voltage approaches the **HBCO** (High Battery Cut Out) level, the inverter will automatically shut down to prevent it from supplying unregulated AC output voltage. The inverter's status LED turns off when a high battery fault condition occurs. The inverter will automatically restart once the battery falls to the **HBCI** (High Battery Cut In) level. Refer to Table 3-1 to determine the HBCO and HBCI levels for your inverter model.

  Info: High battery voltage may be caused by excessive or unregulated voltage from the solar panels or other external charging sources.
- **Overload** – During Inverter and Standby mode operation, the inverter monitors the DC and AC current levels. In the event of a short-circuit or overload condition, the inverter will shut down. The inverter needs to be reset to begin operating again (refer to Section 6.1 for information on resetting the inverter).
- **Over-temperature** – If internal power components begin to exceed their safe operating temperature level, the inverter will shut down to protect itself from damage. The inverter's status LED turns OFF to indicate the over-temperature fault condition. The inverter will automatically restart once the unit cools down.
- **Internal Fault** – The inverter continually monitors several internal components and processor communications. If a condition occurs that does not allow proper internal operation, the inverter will shut down to protect itself and the connected loads. The inverter needs to be reset to begin operating again (refer to Section 6.1 for information on resetting the inverter).

Table 3-1, Inverter Battery Turn On/Off Levels

Inverter Battery turn on/ off Levels	MS-PAE Inverter/Chargers	
	24 VDC Models	48 VDC Models
HBCO	34.0 VDC	>67.6 VDC
HBCI	<33.4 VDC	<66.7 VDC
LBCI	25.0 VDC	50.0 VDC
LBCO (one minute delay)	20.0 VDC (18.0 to 24.4 VDC)*	40.0 VDC (36.0 to 48.8 VDC)*
LBCO (no delay)	17.0 VDC	34.0 VDC

** adjustable with remote control*

3.5 Inverter Start-Up

ON/OFF Switch: The inverter can be turned on and off by lightly pressing and releasing the Power ON/OFF switch on the front of the inverter (refer to Figure 3-5). When the inverter is first connected to the batteries, or when its automatic protection circuit has turned the inverter off, the ON/OFF switch will need to be pressed to start the unit (or reset per Section 6.1). Once the inverter has been turned on, pressing the Power ON/OFF switch alternately turns the inverter on and off.

WARNING: The Power ON/OFF switch does not turn the charger feature on/off or remove pass-thru power. If AC power (utility or generator) is connected and qualified on the AC input, it is also available on the AC output.

Info: The Power ON/OFF pushbutton on the inverter is a small *momentary* type switch which operates by lightly pressing and releasing. Only press forward on this switch, do not press or apply force on the switch sideways or the switch might break.

Status LED Indicator: The status indicator is a green LED (Light Emitting Diode) that provides information on the operational mode of the inverter. Watch this indicator (refer to Figure 3-5) for at least 10 seconds to determine the inverter's operational condition using the information below.

- **Off** – Indicates the inverter is off—there is no AC power (inverter, utility, or generator) at the inverter's output terminals. If the LED says off after pressing the ON/OFF switch, there is a fault condition (such as low battery, high battery, overload, over-temperature or an internal fault). Refer to the Troubleshooting section to help diagnose/clear any fault condition.
- **Slow Flash** (blinks on for 4 seconds, then off for 4 seconds) – Indicates the batteries are float charging and the inverter is in Standby mode (any external AC power connected to the inverter's input is passing through the inverter and powering the inverter's AC loads).
- **Medium Flash** (blinks on once every second) –
  When AC power is <u>not connected</u> to the inverter's input: Indicates the inverter is on and using energy from the battery. The inverter is either: 1) Inverting – providing full power to the loads connected to the inverter; or, 2) Searching – conserving power and waiting for a load to be turned on that meets or exceeds the Search Watts parameter (5 watts = default setting).
  When AC power <u>is connected</u> to inverter input: Indicates absorb charging, and the inverter is in Standby mode (the external AC power that is connected to the inverter's input is passing through the inverter and is powering the AC loads connected to the inverter's output).
- **Fast Flash** (blinks on/off very quickly—flutters) – Indicates the inverter is in equalize charge (requires remote to enable) or the inverter is continuously in reset. If a remote was not used to enable the equalize charge, then suspect the inverter is in reset. Refer to the Troubleshooting section to help diagnose the fault condition.
- **On** (solid) – Indicates bulk charging, and the inverter is in Standby mode (the external AC power that is connected to the inverter's input is passing through the inverter and is powering the AC loads connected to the inverter's output).

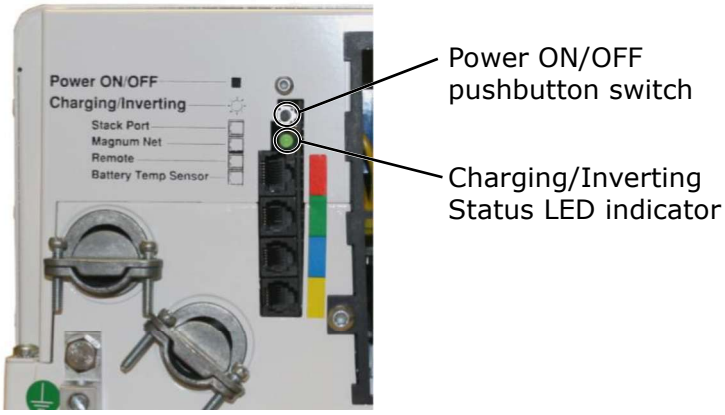

Figure 3-5, Power Switch and Status Indicator

3.6 Factory Default Values

Your MS-PAE Series inverter/charger uses default values for the adjustable settings (shown in Table 3-2) that may be adequate for your installation. If some of your operating parameters need to be changed from the default values, the optional remote control can be used to make those changes. To help you determine if you need a remote display, information on those inverter/charger settings that can be changed is provided below. The settings once programmed are saved in the remote's non-volatile memory and are preserved until changed—even if DC power to the inverter is lost (as long as the remote is connected). For information on the full range of settings for each function, refer your remote owner's manual at www.dmx-power.com

- **Shore Max/Input Amps** – This setting ensures the inverter AC loads receive the maximum current available from the utility or generator power source. When the total current used to power the AC loads and charge the batteries begins to approach the *Shore Max/Input Amps* setting, the current that was used for charging the batteries will automatically be reduced.
- **Search Watts** – This setting allows you to turn off the power-saving Search mode circuitry or adjust the power level at which the inverter will "wake up" and start inverting.
- **LowBattCutOut** – This setting determines when the inverter will turn off based on low battery voltage. The inverter turns off automatically after the battery voltage has been below this setting for more than one minute. This protects the batteries from over-discharge and the AC loads from unregulated power (brown-outs).
- **Batt AmpHrs** – This setting allows the user to establish the battery bank size in amp/hours, which tells the charger how long to charge the batteries in the Absorb charge stage.
- **Battery Type** – Sets the type of batteries being used in the system; this information tells the charger what voltage level to use to charge the batteries.
- **Charge Rate** – This setting can be used to turn off the charger, limit the amount of current that the charger can use (leaving more current available to power loads), or to ensure small battery banks are not overheated because of a charge rate that is too high.
- **VAC Dropout** – Sets the minimum AC voltage that must be present on the AC input before the unit transfers from Standby mode to Inverter mode. This protects the AC loads from utility outages and brown-outs.

A Magnum remote also provides the following features: allows you to enable an equalize charge for certain battery types, displays the inverter/charger's operating status, and provides fault information for troubleshooting.

Table 3-2, Inverter/Charger Default Values*

Adjustable Settings	Default Values
Shore Max/Input Amps	30A
Search Watts	5W (5 Watts)
LowBattCutOut	24 VDC models: 20 VDC (one min. delay), 17 VDC (no delay) 48 VDC models: 40 VDC (one min. delay), 34 VDC (no delay)
Batt AmpHrs	600 AmpHrs (Absorb Time = 120 minutes)
Battery Type	Flooded – Liquid Lead Acid 24 VDC models (Bulk = 29.2 VDC, Float = 26.8 VDC) 48 VDC models (Bulk = 58.4 VDC, Float = 53.6 VDC)
Charge Rate	100%
VAC Dropout	80 VAC (single input)/160 VAC (both inputs)

** These default values are without a remote connected. If a remote is connected, the remote settings are saved in the inverter even if the remote is disconnected—until all power to the inverter is removed or a soft reset is performed.*

3.7 Inverter Fan Operation

The inverter contains two internal cooling fans that are automatically controlled. The speed of these fans is determined either by internal temperature of the inverter or by the load on the inverter. The inverter's fans will come on under the conditions listed below:

- Fans run full speed if the internal transistors (FETS) or the power transformer reaches 176°F degrees Celsius (80°C), or the inverter is running at 100% of its rated load.
- Fans run medium speed if the internal transistors (FETS) or the power transformer reaches 140°F (60°C), or the inverter is running at 50% of its rated load.
- Fans run low speed when the inverter is running at 25% of its rated load.

The fans shut down when none of the above conditions are met, or if the battery voltage is below 19.0V (24-volt systems)/38.0V (48-volt systems).

Whenever the inverter is first connected to the battery, the fans will come on for about one second.

Info: The inverter's fans will not come on based on temperature sensed by the optional Battery Temperature Sensor (BTS).

3.8 Using a Remote with the MS-PAE Series Inverter

The MS-PAE Series inverter has many advanced features. When the inverter is connected to a remote, it allows these advanced features to be set up or enabled. However, the remote may have a later/newer software revision than the inverter, so some of the features and functionality in the remote may not be available with your inverter.

Use the steps below to determine what remote menus/features are available with your inverter:

1. Obtain your inverter's software revision.
   Note: *To view the inverter's software revision level, go to the TECH menus on your remote and access the Revisions display.*
2. Use the table below to determine the inverter's compatibility level (L1, L2, L3 or L4) based on your inverter's software revision.

Table 3-3, Inverter Compatibility Level

INV/CHG Models	Level 1 (L1)	Level 2 (L2)	Level 3 (L3)	Level 4 (L4)
MS4024PAE	NA	NA	NA	≥ Rev 4.0
MS4448PAE	NA	NA	NA	≥ Rev 4.1

3. After determining the inverter's compatibility level, refer to the remote's compatibility matrix (find it online at: www.dmx-power.com under the Service and Support tab) to determine which remote features/settings you can use based on your inverter's compatibility level.
   Note: *If your inverter's compatibility level is the same or greater than the 'Inverter Model/Level Required' on the remote compatibility matrix on our website, then your inverter can support the device setting/feature you want. If your inverter does not have the required compatibility level for a feature/setting you want, contact DMX Power about a software upgrade.*

4.0 Parallel Operation

This section provides information about operating MS-PAE Series inverters in parallel.

Info: The ME-RTR owner's manual provides additional detailed installation information on parallel stacking.

Info: The optional panels (MP) and MPX Series extension boxes are designed to make multiple-inverter applications easy to install. The MP Series enclosure is pre-wired and includes all the major components necessary to set up, monitor and operate multiple MS-PAE inverter/chargers together. The MPX Series comes with the required AC/DC breakers and wiring that enable you to mount and connect additional MS-PAE inverters to the MP Series system's panels.

WARNING: The information is this section is meant to supplement the information in previous sections. To prevent personal injury or equipment damage, you must carefully read and follow all instructions and warnings in this operator's manual.

4.1 Overview

A single MS-PAE inverter produces 120/240 VAC at its rated power (i.e., MS4024PAE provides 4000 watts of inverter power). When multiple MS-PAE inverters are stacked together in parallel (using the required ME-RTR router), the inverters work together as a single inverter/charger system. Because the stacked inverters operate as a single unit, this results in increased continuous and surge capacity, increased charging capability to the battery bank, and increased AC pass-through capacity.

4.2 Parallel System Requirements

When connecting units in parallel, the following requirements must be met.

Info: MP Series enclosures meet the requirements needed to stack MS-PAE inverters and are UL-listed/CSA certified for a code compliant installation.

- Only MS-PAE Series inverters are capable of being stacked in parallel—the models must be identical (i.e., all MS4024PAE models, or all MS4448PAE models).
- A maximum of four identical MS-PAE inverters can be connected in parallel.
- The ME-RTR router must be directly connected to each MS-PAE inverter in order to communicate and synchronize for parallel operation.
- The RJ45 stack cables (two are provided with the ME-RTR) must be used to directly connect the ME-RTR to each inverter. This stacking cable is the only one that satisfies the parallel system's size, data and insulation requirements, and meets NEC/CEC site approval.
- Every inverter in the parallel system must be connected to the same battery bank.
- The DC connection cables from the battery to each inverter must be of equal length and size.
- There must be a separate cable run from each inverters positive terminal to the battery bank [thru an overcurrent protection device (i.e., breaker)]. ***Note:*** *If you connect the cables together - other than at the battery bank - and a cable fails, there is the possibility of pulling too much current through the remaining cables.*
- The inverters' negative terminals must be connected together, either at the inverters or at a location close to the inverters (within 18 inches/0.5 meters).
- The AC input cables to each inverter must be of equal length and size. The AC output cables to each inverter must be of equal length and size. ***Note:*** *The length of the AC input cables may be different than the length the AC output cables.*
- The MS-PAE inverters should be no more than 6" (15 cm) from each other—to allow the 6-foot stacking cables to connect to each inverter—but allow at least 3" (7.6 cm) between, under, above, and in front of the inverter for ventilation purposes.
- The AC input to every inverter must be from the same AC source, and the two 120 VAC legs from that AC source into each inverter input must be 180° out-of-phase from each other.
- Each inverter must have appropriate AC and DC overcurrent protection.

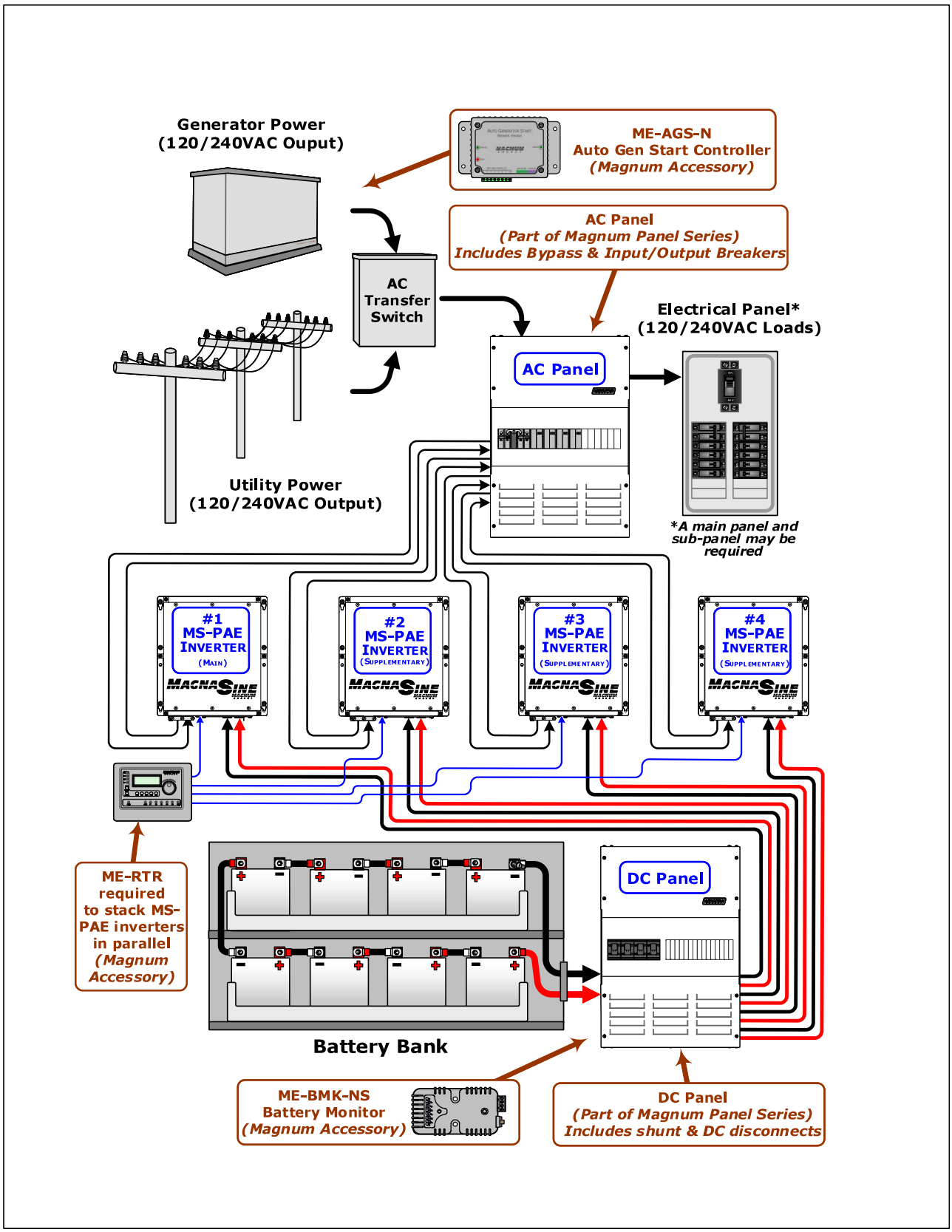

Figure 4-1, Simplified Installation Diagram – Multiple Parallel-stacked Inverters

4.3 Parallel System Connections and Components

The basic installation procedure of the parallel system is similar to that of single inverter system. However, the AC/DC connections and components required in a parallel system must be considered.

4.3.1 AC and DC Connections Simplified using Magnum Panels

The AC and DC connections in a parallel system depend upon additional separate components (highlighted in **bold** in the two sections below). The Magnum Panel (MP) Series of enclosures (e.g., the AC Panel and DC Panel as shown in Figure 4-1) include all these separate components, with most of the necessary AC and DC wiring connections already completed for you. Figures 4-2 and 4-3 are simplified diagrams of the MP enclosure's AC and DC Panels showing those connections and components. Refer to the MP Owner's Manual for detailed instructions on parallel system connections.

4.3.2 AC Connections Required in Parallel System

The AC input supply to the parallel system must be a 120/240 VAC split-phase system that provides two line conductors (referred to as L1 and L2), a neutral, and ground. Each MS-PAE inverter requires a double-pole circuit breaker rated for a maximum 30 amps per pole. Typically, the AC input supply originates in a main distribution panel which provides the required separate **AC breakers** for the AC input of each MS-PAE inverter. This main panel also includes the **AC busbars** to allow the connection of the neutral and ground conductors to each inverter input.

The AC output side of a parallel system requires an electrical panel—referred to as the inverter panel—that combines all the inverter outputs and is equipped with a large double-pole circuit breaker rated for the total output current of the parallel system. This inverter panel must provide the **AC busbars** for the neutral and ground conductors from each inverter output.

If the inverter system requires isolation from the AC source for servicing (without losing power to the AC loads), an **AC bypass** should be installed between the AC input and output connections.

4.3.3 DC Connections Required in Parallel System

When inverters are stacked they must operate from a common battery bank. In other words, the DC negative of one inverter must be common with the second inverter, and likewise for the DC positive. Each inverter must be wired to the same battery bank separately and have a **DC breaker** in the positive side, matched to the cable size (see Figure 4-5).

All DC negatives are required to be combined on a **DC busbar**, and if the system requires battery bank monitoring a full system **DC shunt** will need to be installed in the DC negative side.

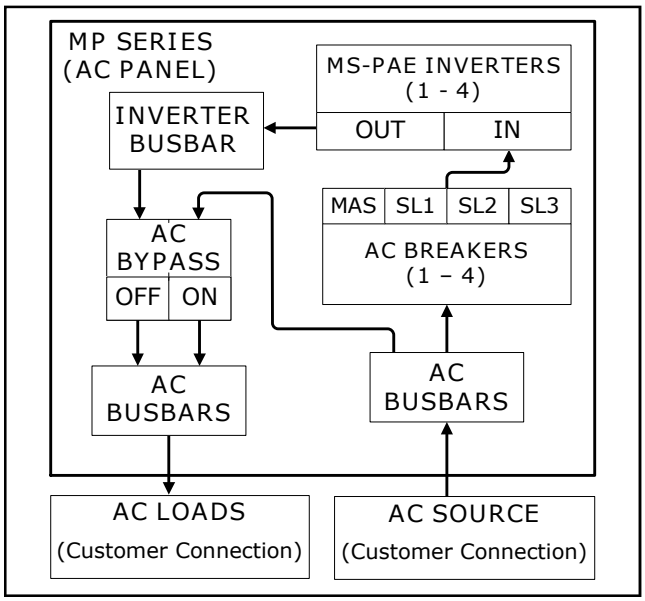

Figure 4-2, Simplified Panel (AC Panel)

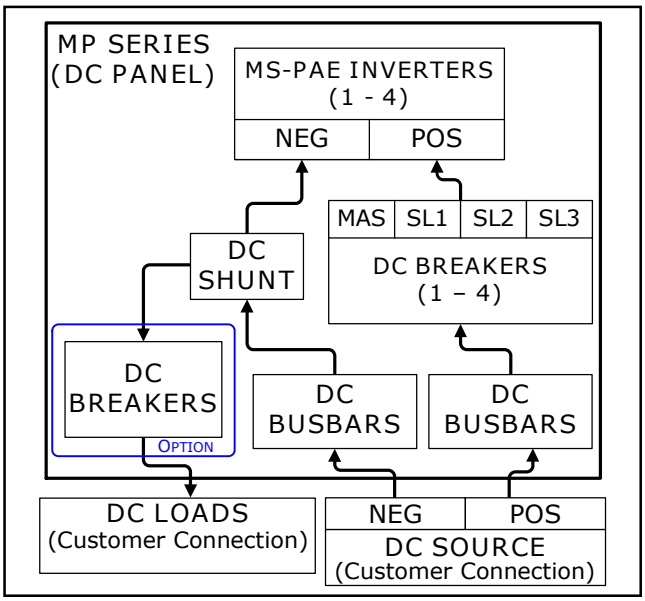

Figure 4-3, Simplified Panel (DC Panel)

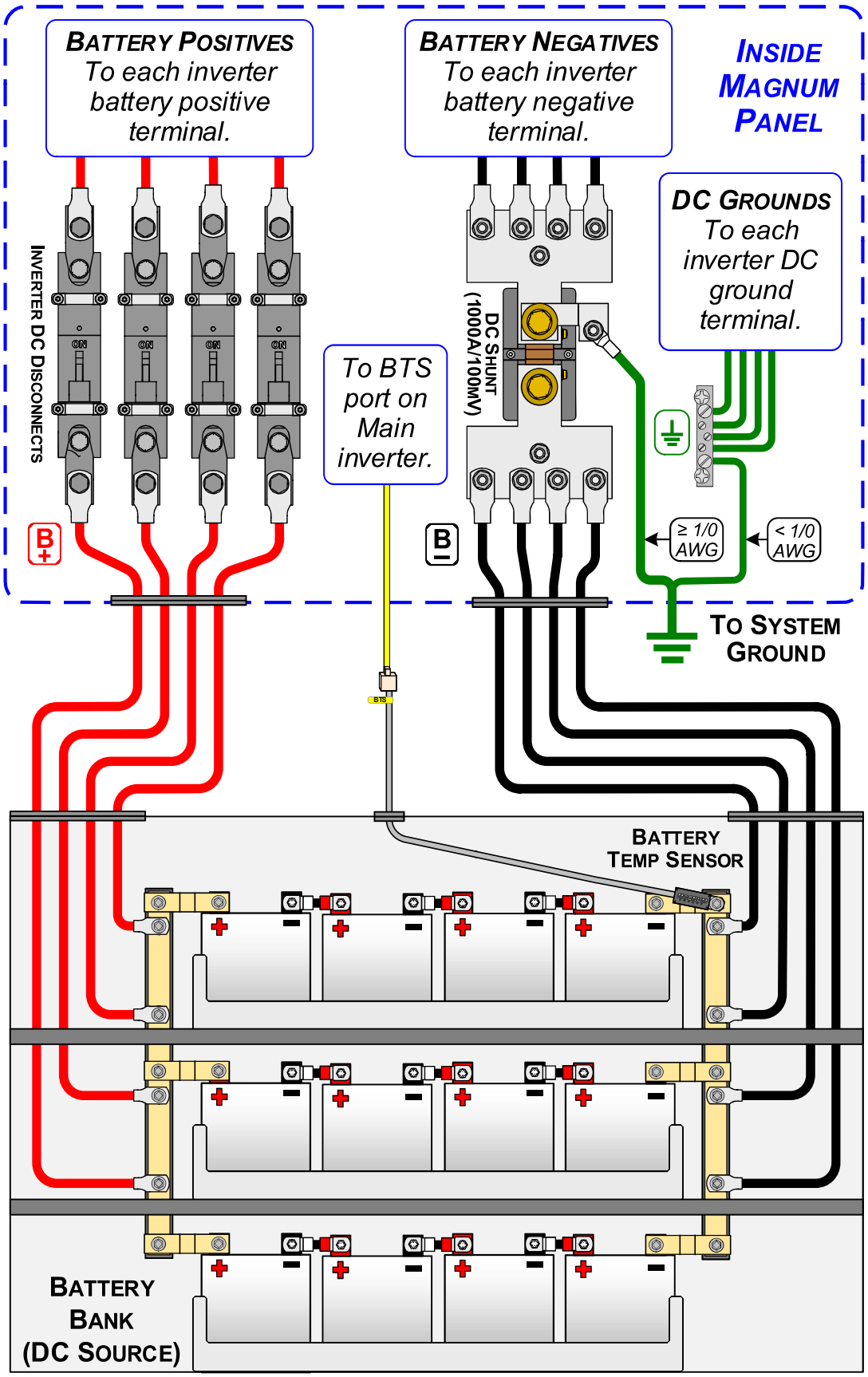

Figure 4-4, Battery Connections in a Parallel System

4.4 Functional Test for Parallel-stacked MS-PAE Inverters

Paralleled inverters must communicate together in order to provide 120/240 VAC to the loads. They will shut down if any inverter faults occur. The functional test will confirm that the parallel-stacked units are operating correctly.

CAUTION: To prevent damage when using MS-PAE series inverters in a parallel-stacked system, you must connect the stack cables to the ME-RTR and to each inverter's Stack port before applying any power, or turning on any inverter.

Before performing the functional test, ensure the following:

- All DC disconnects to the inverters are turned off.
- All AC input and output circuit breakers are turned off.
- Stack cables are connected from the ME-RTR (MA, SL1, SL2, and SL3) to each inverter's Stack Port (red label).
- Remote cables are connected from the ME-RTR (P1-P4) to each inverter's Remote Port (blue label).

  Info: Coordinate the remote cables to the router's communications ports so that the Main inverter is connected to Port 1, Supplementary 1 inverter is connected to Port 2, etc. (remote and stack cables are connected to the inverters in order from left to right). This configuration makes it easy to keep track of which inverter is displayed on each port, and allows you to easily identify the main and supplementary units.

- Only the same inverter models are stacked together (i.e., all MS4024PAE models, or all MS4448PAE models).
- The NEUT OUT of all inverters are connected to the same neutral bus.
- DC and AC grounds are connected and properly installed.
- AC input and output connections are wired correctly to the terminal block, and are not reversed (double-check before turning on the inverters).

4.4.1 Power-up Procedure (Stacked System)

Before powering up the stacked system, ensure:

- No AC power is connected
- All DC connections are properly connected and tight.
- Battery voltage is within the DC voltage range for your parallel-stacked inverters (i.e., 24-volt battery bank for a 24-volt inverter).
- The DC negatives of each inverter are connected together.
- The positive (+) battery cables are connected to the positive (+) battery terminals through a DC disconnect and overcurrent device.
- The negative (–) battery cables are connected to the negative (–) battery terminals.

Apply battery power to all the inverters by closing the DC circuit-breakers to each inverter at the same time (see CAUTION below). The inverters remain OFF, but the green status indicator on the front of each inverter quickly blinks once to indicate that DC power has been connected and the inverters are ready to be turned on.

CAUTION: It is crucial that the DC voltage be connected to all the inverters within 5 seconds of each other. The units go through an autodetect when first powered-up to synchronize the units for parallel stacking.

4.4.2 Verifying Parallel-stacked Communication

Once DC power is applied—and before turning on any inverter—press the router's Port button, and then confirm that each port with an inverter connected to it is properly identifying itself (i.e., the top line of the router display correctly identifies the unit as a main or supplementary inverter). Refer to Figure 4-5 to view the appropriate router Port displays (main, supplementaries) for the displayed system.

CAUTION: If there is a communication issue, the ME-RTR's top line will show the inverter's status (e.g., Off, Inverting, Searching) rather than identifying that port's connected inverter as a main or supplementary unit. In that case, the router mistakes the unit as a standalone inverter, will not sync properly, and may result in damage to that unit—possibly causing damage to the other inverters in the system as well.

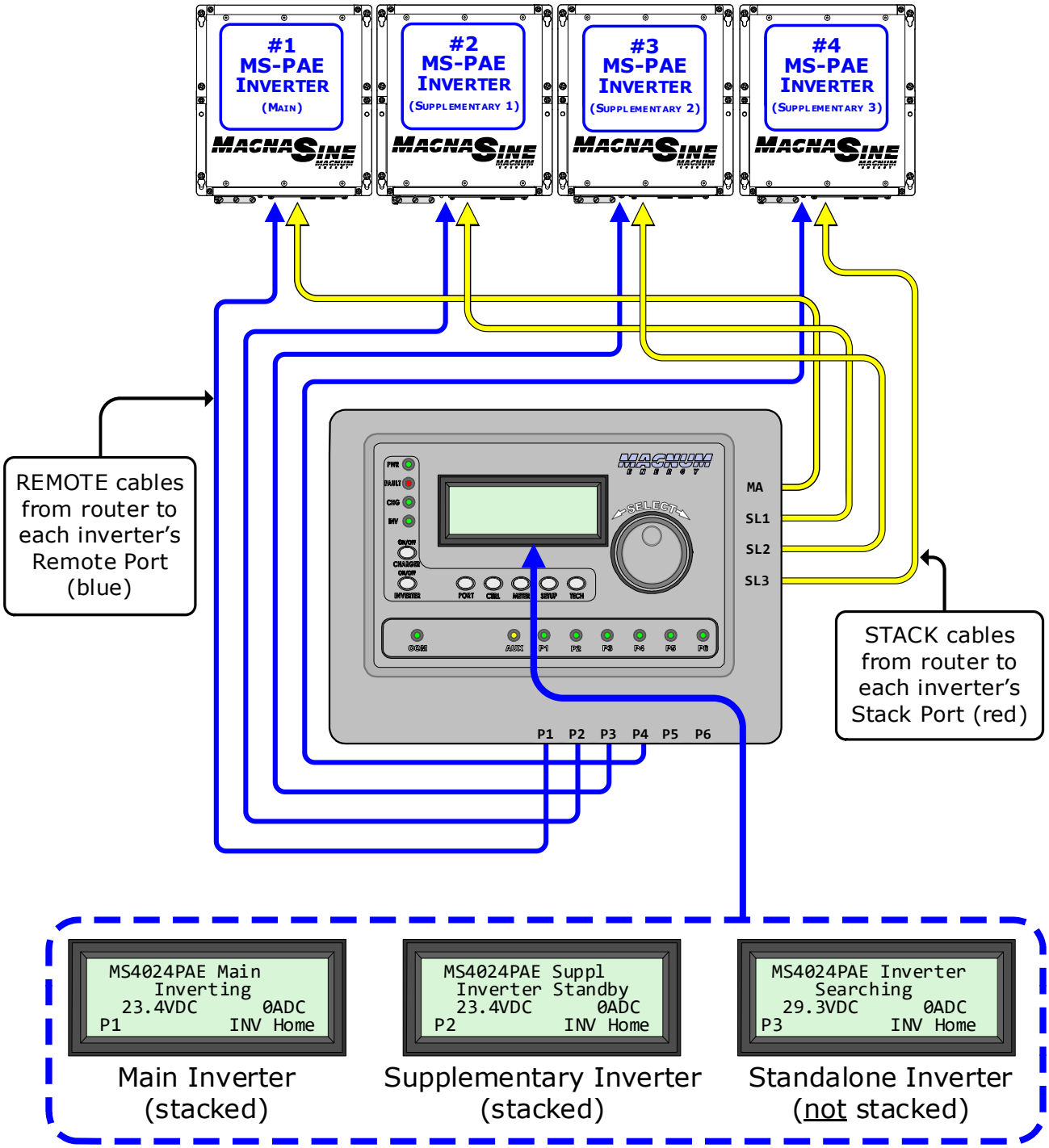

Figure 4-5, ME-RTR (Port) Main/Supplementary Displays

4.4.3 Performing the Functional Test

After all electrical connections to the AC source, inverters, batteries, and remote (also main panel and sub-panel, if applicable) have been completed, follow these steps to test the installation and the inverters' operation.

Testing Invert Mode

1. Prior to turning on the inverters, make sure all AC loads (i.e., appliances) are NOT connected to the inverters' output or to any AC outlets powered by the inverters.
2. Press and release the INVERTER ON/OFF switch on the ME-RTR (i.e., router) to turn on all of the inverters. Verify that each inverter's status indicator is blinking—indicating each inverter is on.
3. Connect a 10 to 25-watt light bulb to the inverters' output, and then verify it comes on and shines normally. DO NOT connect anything but a light bulb until all wiring and voltages are confirmed to be correct.

   Info: The inverters' AC output voltage will not be correct until a >5-watt load (5 watts is default setting) is connected to the inverters' output, or Search mode is turned off with the router. The 10-watt or greater light bulb is used because it is a sufficient load to bring the inverters out of Search mode and up to full voltage.

4. Check the AC output voltage of the inverters by connecting an AC voltmeter to the output terminals of the Main inverter (see Figure 2-17), and then verify the correct output voltages.
5. Press and release the INVERTER ON/OFF switch on the ME-RTR to turn off all of the inverters. Each of the inverters' status indicators and the connected load should go off.

Testing AC Transfer/Charge Mode

6. Apply AC power to the inverters' AC input. After the AC input power is qualified (approximately 15 seconds), the incoming AC power transfers through the inverters to the inverters' AC output and powers the light bulb. Verify that each inverter's status indicator and the light bulb come on.
7. Even though the light bulb is on, the inverters are currently disabled (off). Press and release the INVERTER ON/OFF switch on the ME-RTR to enable (turn on) all of the inverters.
8. Disconnect the incoming AC power to the inverters. Verify the light bulb remains on and is now is powered by the inverters.

If the inverters pass all the above steps, your parallel-stacked inverter system is ready for use. If the inverters fails any of the steps, refer to the Troubleshooting section.

4.5 Parallel Threshold Feature for MS-PAE Inverters

The router provides a parallel threshold setting for use with MS-PAE inverters in parallel-stacked systems. This setting uses the percentage of power being provided by the main inverter as the determining factor for when the supplementary inverters will turn on. When this setting is reached, all connected supplementary inverters turn on at the same time to deliver maximum power to the loads. After running approximately 30 seconds to stabilize the AC current, the supplementary inverter(s) that are not needed shut down and the units that are still inverting equally share the AC current. Refer to your router owner's manual for more info on this feature.

Should I use the Parallel Threshold feature? Depends on the application. Most applications set a threshold level such that the connected supplementary inverters come on only when required to power the loads. This reduces the power drain on the batteries because the supplementary inverters that are not actively powering the loads are in standby. However, if you have a load larger than the capacity of the main inverter—and the startup current is needed very quickly—you may need to turn off the threshold setting. This would ensure that all stacked inverters are always on to meet the fast startup current requirements of a large load.

Where should I set the Parallel Threshold? Depends on your typical AC loads and how much time you want the main inverter to run (versus the supplementaries). If you want the main inverter to run as much of the loads as possible before the supplementary(s) turn on, then set the threshold at a higher setting. If you want the supplementary(s) to share more of the load, then set the threshold to a lower setting.

5.0 Using the MS-PAE Series in an AC Coupled Application

This section covers the use of MS-PAE Series inverter/chargers in an AC coupled system.

5.1 What is an AC Coupled System

Many homeowners utilize renewable energy (e.g., PV, wind, etc.) by installing high efficiency, battery-less, grid-tie inverter systems to offset their power consumption from the utility grid. However, during a utility power outage, the grid-tie inverter normally stops operating. This can cause considerable frustration as the homeowner realizes that the critical loads in the home (e.g., refrigerator, lights, water pump, etc.) are no longer powered, and all the energy produced by the renewable energy source is being wasted while the utility power is out.

In an AC coupled system, since all the energy sources and loads are connected directly to the AC side, an option would be to install a bi-directional battery-based inverter, such as the MS-PAE Series. The MS-PAE Series would allow the existing battery-less, grid-tie inverter to continue operating during a power outage; thereby, continuing to utilize the renewable energy to power the home's critical loads—all from the AC side. However, in an AC coupled system—during a utility power outage—the utility grid is not available to export any excess power that is generated. This means there may be more power produced than the critical loads can consume, causing this excess current to be pushed back through the output of the inverter into the battery bank. Since this is not the normal path for the inverter to control incoming current, it is unable to regulate the battery voltage, providing the possibility that the battery voltage will rise and cause damage to your batteries. However, the MS-PAE Series inverter includes a "frequency shift" feature that can be used to regulate the battery voltage by changing its output frequency.

5.2 Frequency Shift Feature

The frequency shift feature—when enabled—causes the output frequency of the MS-PAE Series inverter (≥Version 6.0) to change based on the inverter's battery voltage. If the battery voltage begins rising, the output frequency starts decreasing; as the battery voltage returns to its correct voltage level, the frequency increases.

In an AC coupled system, the MS-PAE Series inverter is optimized to work with Magnum Energy's MicroGT500[1] grid-tie inverter to regulate the battery voltage. During a utility power interruption, if the battery voltage begins to rise above the custom-absorb voltage level, the output frequency of the MS-PAE Series will start shifting down. The MicroGT500 grid-tie inverter responds by decreasing its output current to avoid overcharging the battery. As the battery voltage falls, the MS-PAE Series frequency starts shifting back up allowing the MicroGT500 inverter to gradually provide more current so that the battery can return to its custom-absorb voltage level. The response time and whether the frequency continues to shift down or start shifting back up depends on how fast the battery voltage rises or returns to the custom-absorb voltage level.

Note[1]: *If you are using a grid-tie inverter other than the MicroGT500, you may need to use an additional primary battery management system to ensure the batteries are not overcharged. This may require you to install a diversion controller and a load capable of absorbing the majority of the expected surplus energy. Options include: 1) a DC diversion controller and DC resistance loads; 2) AC diversion using AC resistance loads driven by DC controlled relays; or, 3) DMX Power's AC Load Diversion controller (ACLD-40).*

5.3 Configuring a Remote to work in an AC Coupled System

A remote control (ME-RTR, ME-ARC, or ME-RC) is required and must be configured in order for the MS-PAE inverter to work optimally in an AC coupled system—as described below:

1. Enable Frequency Shift: Under the SETUP button, set the *Battery Type* menu setting to "Custom".
2. Turn off Search mode: Adjust the SETUP button's *Search Watts* menu setting to "OFF".
3. Turn off Parallel Threshold (ME-RTR only): Adjust the SETUP button's *Inverter Threshold to Start Parallel* menu setting to "OFF".
4. Ensure the MS-PAE is set to automatically accept grid power when available (ME-ARC and ME-RTR only): Adjust the CTRL button's *AC In Control* menu setting to "Auto Connect".

6.0 Troubleshooting

The MS-PAE Series inverter/charger is a fairly simple device to troubleshoot. The following chart is designed to help you quickly pinpoint the most common inverter or charger failures.

Table 6-1, Troubleshooting Guide

Symptom	Possible Cause	Recommended Solution
No output power. Inverter LED is OFF.	Inverter is switched OFF.	Switch the inverter ON.
	Battery voltage is too low. The battery voltage level has dropped below the Low Battery Cut Out (LBCO) set-point for more than one minute.	Check fuses/circuit-breakers and cable connections. Check battery voltage at the inverter's terminals. Batteries may need to be charged. This fault condition automatically clears when the battery voltage is > LBCI voltage.
	The battery voltage is too high. The inverter automatically resets and resumes operation when the battery voltage drops to the HBCI voltage or lower.	This condition usually only occurs when an additional charging source (alternator, solar panels, or other external charging sources) is used to charge the battery bank. Reduce or turn off any other charger to the inverter batteries to allow the voltage level to drop.
	Over-temperature condition: The internal temperature of the inverter has risen above acceptable limits; caused by loads too great for the inverter to operate continuously, or by lack of ventilation to the inverter. When the unit has cooled, it automatically resets and resumes operation.	Reduce the number of electrical loads that you are operating, this will avoid a repeat Overtemp shutdown if the cause was too many loads for the ambient conditions.
		Check ventilation around the inverter, ensure cool air is available to pass-thru the inverter (see ventilation requirements in Section 2.1.3).
	AC overload condition: The inverter has turned off because the connected loads are larger than the inverter's output capacity, or the output wires are shorted.	Reduce the AC loads connected to the inverter, or remove all AC output wiring and restart the inverter.
	Internal fault: This fault occurs when an internal fault is detected.	An inverter reset is required to clear fault. Remove all AC and DC power to the inverter, or press and hold down the inverter's power switch for ~10 seconds (until green Status LED lights). If fault does not clear, the unit needs to be serviced.
No output power. Green LED is flashing.	Unit is in Search mode, which means load is too small for search mode circuit detection.	Turn on load greater than 5 watts to bring inverter to full output power or turn off search with remote.
Low output or surge power. Green LED is flashing.	Loose or corroded battery cables.	Clean and tighten all cables.
	Low batteries.	Recharge or replace batteries.
	Loose AC output connections.	Tighten AC output connections.
	Battery cables are wrong length or gauge.	Verify recommended cable lengths and gauges per manual. Replace cables as needed.
Low charging rate when connected to shore power.	Charge rate set too low.	Adjust *Charge Rate* or *SHORE* settings.
	Low AC voltage (<85 VAC).	Check AC input wiring.
Low charging rate when using a generator.	Generator output is too low to power both load and charger.	Reduce the load, increase the generator's RPMs.
		Check *SHORE* settings (if remote connected).
Charger doesn't charge.	Loose or corroded battery cables.	Clean and tighten battery cables.
	Defective batteries.	Replace batteries.
	Wrong charger settings.	Adjust the charger settings, ensure the unit is not in charger standby.
	Wrong AC input voltage.	Verify proper AC input voltage and frequency.
While charging, the DC charge voltage is higher or lower than expected.	If the Battery Temperature Sensor (BTS) is installed, the DC voltage will increase or decrease depending on the temperature around the BTS.	This is normal; see Section 3.3 (Battery Temperature Sensor Operation) for more information.

6.1 Resetting the Inverter

Under some fault conditions (e.g., an internal fault), the inverter will need to be reset.

WARNING: A soft reset should not be performed with parallel stacked inverters. If a reset is required, perform a hard reset instead (see Section 6.1.2).

Prior to performing any reset, ensure all AC power (utility, generator, shorepower) is removed from the inverter's input, and all inverter loads are turned off.

CAUTION: If AC is connected while performing an inverter reset, damage may occur.

6.1.1 Performing an Inverter Reset (i.e., soft reset)

To perform an inverter reset (also known as a "soft reset"):

1. Lightly press and hold the Power ON/OFF pushbutton (see Figure 6-1) for approximately ten (10) seconds until the Charging/Inverting Status LED comes on and flashes rapidly (i.e., flutters).
2. Once the rapid flashing has begun, release the Power ON/OFF pushbutton. This completes the "soft reset". ***Note:*** *The Status LED will go off after the pushbutton is released.*
3. After the inverter reset is completed, press the ON/OFF pushbutton to turn the inverter ON.

If the inverter reset fails, you will need to perform a power reset using the procedure below in Section 6.1.2. In either case, if an internal fault does not clear, the inverter will require repair at an Authorized Service Center (ASC).

Info: The Power ON/OFF pushbutton on the inverter is a small *momentary* type switch which operates by lightly pressing and releasing. Only press forward on this switch, do not press or apply force on the switch sideways or the switch might break.

1. Lightly press and hold (do not release) the Power ON/OFF pushbutton.

2. Watch the Charging/Inverting Status LED, after holding for approximately 10 seconds it should come on and flash rapidly (i.e., flutter) to indicate the inverter has reset. The Status LED will go off after the pushbutton is released.

Figure 6-1, Performing an Inverter Reset

6.1.2 Performing a Power Reset (i.e., hard reset)

To perform a power reset (also known as a "hard reset"):

1. Open the inverter's DC disconnect (or disconnect the positive battery cable to the inverter). ***Note:*** *If performing a "hard reset" on a parallel stacked system with multiple inverters, all the inverters' DC disconnects should be turned off "at the same time" (all off within 5 seconds).*

   CAUTION: If removing all battery power (positive and negative) to the inverter, do not remove the DC negative connections to the inverter or any accessory until after all positive battery connections have been disconnected. This will prevent damage to the inverter or to any network connected accessory.

2. Ensure the inverter and the remote are disconnected from all AC and DC power (the remote display will be blank).
3. After the inverter has been disconnected from all power for 30 seconds, reconnect the inverter DC disconnects (or reconnect the positive battery cable) and resume operation.

Info: If DC disconnects are not used, there may be a momentary spark when the positive battery cable is connected to the inverter's terminal. This is normal and indicates that the inverter's internal capacitors are being charged.

Appendix A – Specifications and Optional Equipment

Table A-1, MS-PAE Specifications (at 25°C)

Models	MS4024PAE	MS4448PAE
Inverter Specifications		
Input battery voltage range	18.0 to 34.0 VDC	36.0 to 64.0 VDC
Absolute maximum DC input	50 VDC	68 VDC
Nominal AC output voltage	120/240 VAC split phase	
AC output voltage accuracy	L-N: 120 VAC ±5%, L-L: 240 VAC ±5% (≤ continuous power)	
Output frequency and accuracy	60 Hz ± 0.1 Hz	
Total Harmonic Distortion (THD)	< 5%	
Continuous power output at 25°C	4000 VA (L-L)	4400 VA (L-L)
Continuous AC output current	L-N: 27.0 A/120 VAC, L-L: 16.7 A/240 VAC	L-N: 29.7 A/120 VAC, L-L: 18.3 A/240 VAC
1 msec surge current (AAC)	L-N: 120, L-L 70	
100 msec surge current (AAC)	L-N: 72, L-L 40	L-N: 75, L-L 40
5 sec surge power (real watts)	5800	8500
30 sec surge power (real watts)	5200	6000
5 min surge power (real watts)	4800	5400
30 min surge power (real watts)	4500	4800
Max. continuous input current	266A	144A
Inverter efficiency (peak)	93%	94%
Transfer time	16 mSecs	
Search mode (typical)	< 6 watts	
No load (120 VAC output, typical)	27 watts	25 watts
Waveform	Pure Sine Wave	
Charger Specifications		
AC input range	60 to 140 VAC / 50 to 70 Hz	
Continuous output at 25°C	105 ADC	60 ADC
Charger efficiency	85%	
Power factor	> 0.95	
Input current at rated output	15 AAC/leg at 120/240 VAC split phase	17.5 AAC/leg at 120/240 VAC split phase
General Features and Capabilities		
Transfer relay capability	2 legs at 30A per leg transfer standard	
Five-stage charging capability	Bulk, Absorb, Float, Equalize (requires remote), and Battery Saver™	
Battery temp compensation	Yes, 15 ft Battery temp sensor standard	
Internal cooling	0 to 120 cfm variable speed drive using dual 92 mm brushless DC fans	
Overcurrent protection	Yes, with two overlapping circuits	
Over-temperature protection	Yes on transformers, MOSFETS, and battery	
Corrosive protection	PCBs conformal coated, powder-coated chassis & top, stainless steel fasteners	
Listings	ETL Listed to ANSI/UL1741, 1st edition, and CSA STD C22.2 No. 107.1-01	
Environmental Specifications		
Operating temperature	–20°C to +60°C (-4°F to 140°F)	
Non-operating temperature	–40°C to +70°C (-40°F to 158°F)	
Operating humidity	0 to 95% RH non-condensing	
Physical Specifications		
Unit Dimensions (L x W x H)	13.75” x 12.65” x 8.0” (34.9 cm x 32.1 cm x 20.3 cm)	
Shipping dimensions (L x W x H)	18.5” x 17.5” x 12.5” (47 cm x 44.5 cm x 31.8 cm)	
Mounting	Shelf, wall (no vents on bottom), MP or MMP panels	
Unit/Shipping weight	55 lb (24.9 kg) / 62 lb (28.2 kg)	55 lb (24.9 kg) / 63 lb (29.6 kg)

A-1 Efficiency Graphs

The following curves are plotted to show the MS-PAE Series' efficiency over the inverter's power range (displayed as a percentage).

These graphs represent a typical inverter's efficiency while operating resistive loads. Motors and other inductive loads run less efficiently due to the impact of power factor losses.

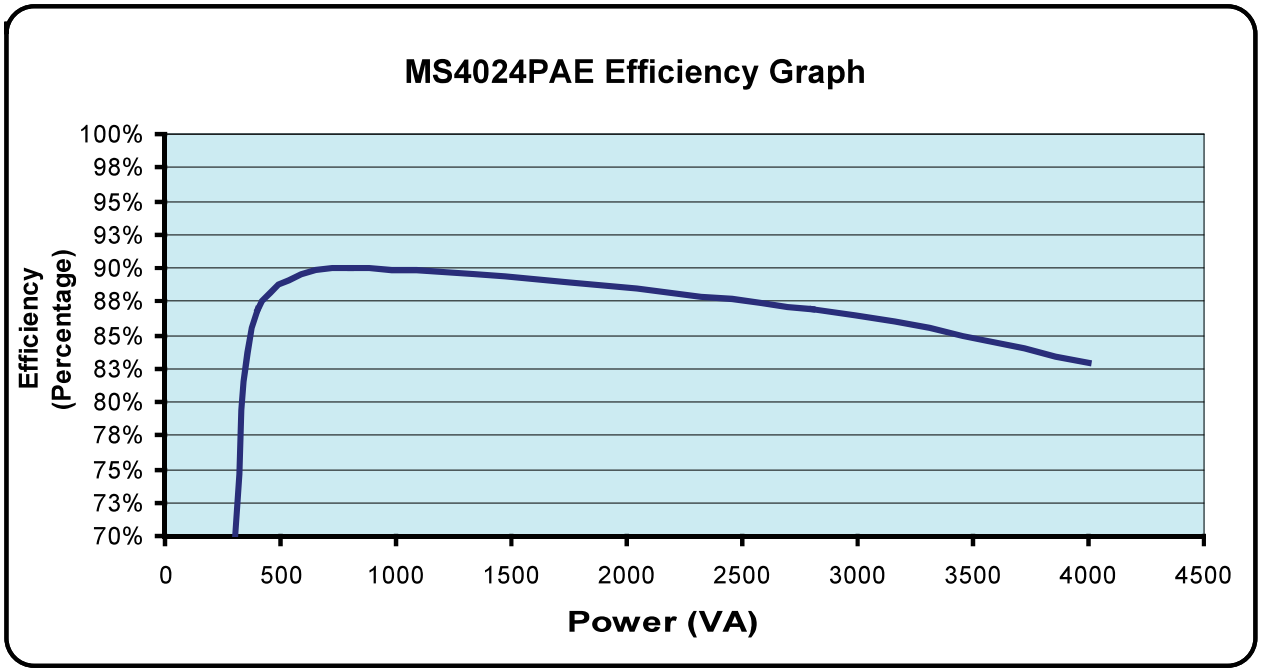

Figure A-1, MS4024PAE Efficiency Chart

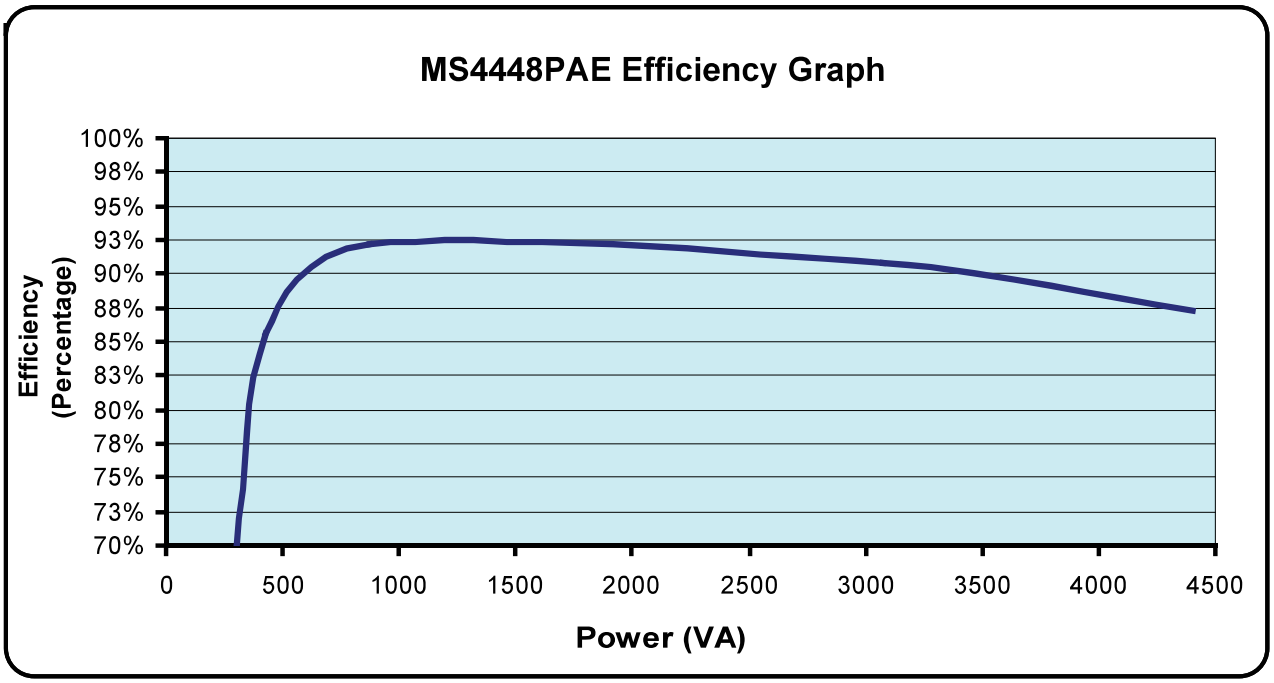

Figure A-2, MS4448PAE Efficiency Chart

A-2 Optional Equipment/Accessories

The following components are available for use with the MS-PAE Series inverter/charger. Some of these items are required depending upon the intended use of the inverter.

MMP Series Enclosures

The MMP175-30D, MMP175-60S, MMP250-30D, and MMP250-60S enclosures are for single inverter applications. The MMP Series enclosures have been specifically designed to combine all of the major components required for a renewable energy system—inverter/battery disconnect, AC overcurrent protection, grounding connections and a full system inverter bypass switch as a convenient way to isolate the inverter for battery maintenance—into a single, easy to install pre-wired enclosure.

MP Series Enclosures

The MPSL, MPSH, MPDH enclosures have been specifically designed to easily work with multiple stacked inverters. The MP enclosures feature convenient front-mounted AC and DC connections and easy front panel operation. Depending on the MP enclosure, you can connect from 2 to 4 inverters together—using the MPX Series extensions—to handle your power capacity needs.

Router Control

The ME-RTR Router Control display panel provides operating information and setup/troubleshooting capabilities for multiple inverters. Allows up to four MS-PAE inverters to be connected in a parallel configuration for increased inverter power.

Advanced Remote Control

The ME-ARC allows the advanced features of the MS-PAE inverter to be configured. This LCD remote display also provides advanced monitoring/troubleshooting and includes a FAVS button to access your favorite features quickly.

Auto Generator Controller

The ME-AGS-N is designed to automatically start your generator based on low battery condition or high temperature. The AGS controller includes an input voltage jumper (for 12, 24 and 48-volt battery banks) and a 4-position DIP (Dual In-line Package) switch which provides the ability to change the relay timing configurations to allow compatibility with a wider range of generators. Adjustable settings include starting the generator based on battery voltage, time of day, battery state of charge, or high temperature. Also includes "Quiet Time" with an easy to set clock. AGS settings do not interfere with the manual start/stop operation of the generator.

Battery Monitor

The Battery Monitor Kit (ME-BMK) is a single battery AH meter that monitors the condition of the battery, provides information to let you know how much energy you have available, and lets you plan your electrical usage to ensure the battery is not being over-discharged. The ME-BMK-NS version does not include a DC shunt. You must order the ME-BMK to receive a 500A/50mv DC shunt.
Note: *The DC shunt is included with MMP and MP Series enclosures. Order the ME-BMK-NS version when installed with the MMP or MP enclosures.*

MagWeb

The MagWeb – Wireless (ME-MW-W) or MagWeb – Ethernet (ME-MW-E) are powerful and cost-effective tools for remotely monitoring inverters and accessories. Installed on the network, either MagWeb provides live internet monitoring of the inverter, battery monitor, and automatic generator start module. Using your always on Internet connection, either MagWeb makes live and historical conditions available to you.

ME-CB and MPX-CB Conduit Boxes

The ME-CB and MPX-CB conduit boxes are provided for installations where the electrical code requires AC and/or DC wiring to your inverter to be enclosed and protected by conduit.

Smart Battery Combiner

The Smart Battery Combiner (ME-SBC) is designed to monitor and charge a second battery using a portion of the current that is charging the main battery. The ME-SBC eliminates a significant voltage drop, and provides automatic turn-on and turn-off based on adjustable voltage set-points. This allows different batteries to be charged from a single charging source, and prevents overcharging/undercharging.

Appendix B – Battery Information

B-1 Battery Location

Periodic maintenance (i.e., checking connections, cleaning, watering) on batteries is required. Locate the batteries in an accessible location to perform this maintenance. Two feet clearance above the batteries is recommended for access to the battery terminals and removable caps (lead acid battery types). The battery bank should be located as close to the inverter as possible without limiting access to the inverter's disconnects.

B-2 Battery Types

Batteries are available in different sizes, amp-hour ratings, voltage and chemistries. They are also available for starting applications (such as an automobile starting battery) and deep discharge applications. Only the deep cycle types are recommended for inverter applications; using a starting battery in an inverter (deep cycle) application will greatly shorten their useful life. Choose the batteries best suited for the inverter installation and cost. Use only the same battery type for all batteries in the bank. For best performance, all batteries should be from the same lot and date. This information is usually printed on a label located on the battery.

B-3 Battery Temperature

Battery performance of lead-acid type batteries is greatly affected by extreme temperatures. When a lead-acid type battery is cold, its effective amp-hour capacity is reduced. When determining the battery requirements needed for the inverter system, realize that the battery capacity will be reduced if they will be installed in a climate where extremely cold temperatures are expected. In this type of environment, the batteries should be located in a heated area. At the minimum, the batteries should be installed in an insulated enclosure; which will keep the batteries warmer as they are being charged.

The battery bank should also be protected from high temperatures, which will shorten battery life. In high heat situations the battery room/enclosure should be ventilated to bring in cooler air and exhaust the hotter air. The performance of the battery bank/inverter system will substantially increase by monitoring and preventing extreme temperatures around the batteries.

B-4 Battery Bank Sizing

The size of the battery bank determines how long the inverter will power the AC loads without recharging. The larger the battery bank, the longer the run time. Size your battery bank to the systems AC load requirements and length of time required to run from the batteries. In general, the battery bank should not be discharged more than 50%. Additional DC charging devices such as solar, wind, hydro, etc. can provide longer run times by recharging the batteries in the absence of AC utility or generator power. See also Appendix C, Section C–1.

Info: For the MS-PAE Series inverter/charger to perform optimally, a minimum battery bank of 200 AH is recommended for moderate loads (<1000W) and greater than 400 AH for heavy loads (≥1000W).

B-5 Battery Bank Sizing Worksheet

Complete the steps below to determine the battery bank size required to power your AC loads:

1. Determine the daily power needed for each load.

a) List all AC loads required to run
b) List the watt-hours for each load (see Table C-1 for common loads/wattage)
c) Multiply by how many hours per day (or a fraction of an hour) each load will be used
d) Multiply by how many days per week you will use the listed loads
e) Divide by seven = **Average Daily Watt-Hours Per Load** (Total Power).

Average Daily Watt-Hours Per Load				
AC Load	Watt-Hours	(x) Hours per Day	(x) Days per Week	(÷7) = Total Power

2. Determine the total power needed each day for all the loads.

- Add all Average Daily Watt-Hours Per Load values = **Total Daily Watt-Hours**.

Total Daily Watt-Hours

3. Determine the battery Amp-Hour capacity needed to run all the loads before recharging.

- Divide Total Daily Watt-Hours by the nominal battery voltage of the inverter (i.e., 12, 24, or 48v); and then
- Multiply this by how many days the loads will need to run without having power to recharge the batteries (typically 3 to 5 days of storage) = **Storage Amp-Hours**.

(inverter battery voltage)
÷ ____ =

(days of storage)
x ____ =

4. Determine how deeply you want to discharge your batteries.

- Divide Storage Amp-Hours by 0.2 or 0.5 to get the **Total Amp-Hours**:
  a) 0.2 = Discharges the batteries by 20% (80% remaining), this is considered the optimal level for long battery life; or
  b) 0.5 = Discharges the batteries by 50% (50% remaining), this is considered a realistic trade-off between battery cost and battery life.

Total Amp-Hours

Additional compensation:

Low battery temperature: If the batteries are installed in a location that will be exposed to low temperatures, the output current will be less. In these instances, you will need to determine the lowest temperature the battery bank will experience and multiply the Total Amp-Hours by the multiplier below.

Temperature	80F/27C	70F/21C	60F/15C	50F/10C	40F/4C	30F/-1C	20F/-7C
Multiplier	1.00	1.04	1.11	1.19	1.30	1.40	1.59

Inverter efficiency: When the inverter is used in a back-up power application the inverter efficiency will not be a large concern; however, if the inverter is the primary AC source for the calculated load, the Total Amp-Hours should be multiplied by 1.2 to factor in an average 80% inverter efficiency.

B-6 Battery Wiring

The battery bank must be wired to match the inverter's DC input voltage. In addition, the batteries can be wired to provide additional run time. The various wiring configurations are:

Series Wiring

Wiring batteries in series increases the battery bank's output voltage. A series connection combines each battery in a string until the total voltage matches the inverter's DC requirement. Even though there are multiple batteries, the capacity remains the same. In Figure B-1 below, two 6 VDC, 200 AH batteries are combined into a single string resulting in a 12 VDC, 200 AH bank.

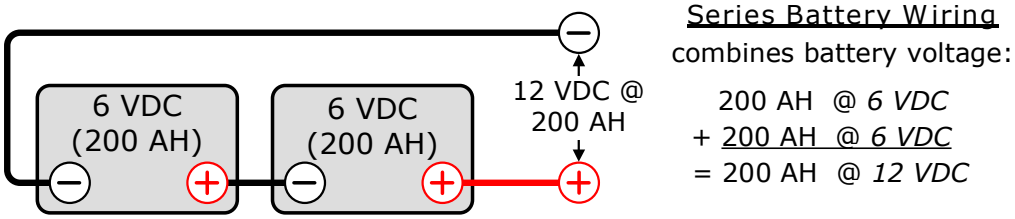

Figure B-1, Series Battery Wiring

Parallel Wiring

Wiring batteries in parallel increases the battery bank's amp-hour capacity, which allows the AC loads to operate for a longer time. A parallel connection combines the number of batteries in the string to increase overall battery capacity; however, the voltage remains the same. In Figure B-2 below, two 12 VDC, 100 AH batteries are combined into a single 12 VDC, 200 AH battery bank.

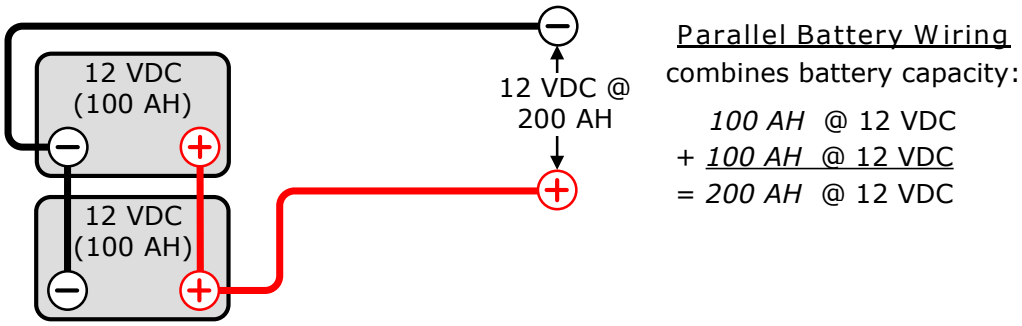

Figure B-2, Parallel Battery Wiring

Series-Parallel Wiring

A series/parallel configuration increases both voltage (to match the inverter's DC requirements) and amp-hour capacity (to increase run-time for operating the loads) using smaller, lower-voltage batteries. In Figure B-3 below, four 6 VDC, 200 AH batteries are combined into two strings resulting in a 12 VDC, 400 AH battery bank.

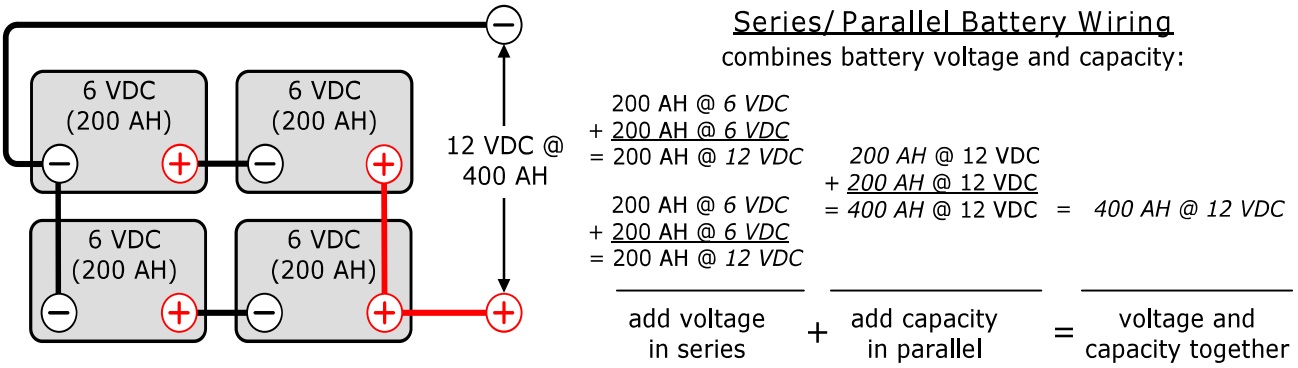

Figure B-3, Series-Parallel Battery Wiring

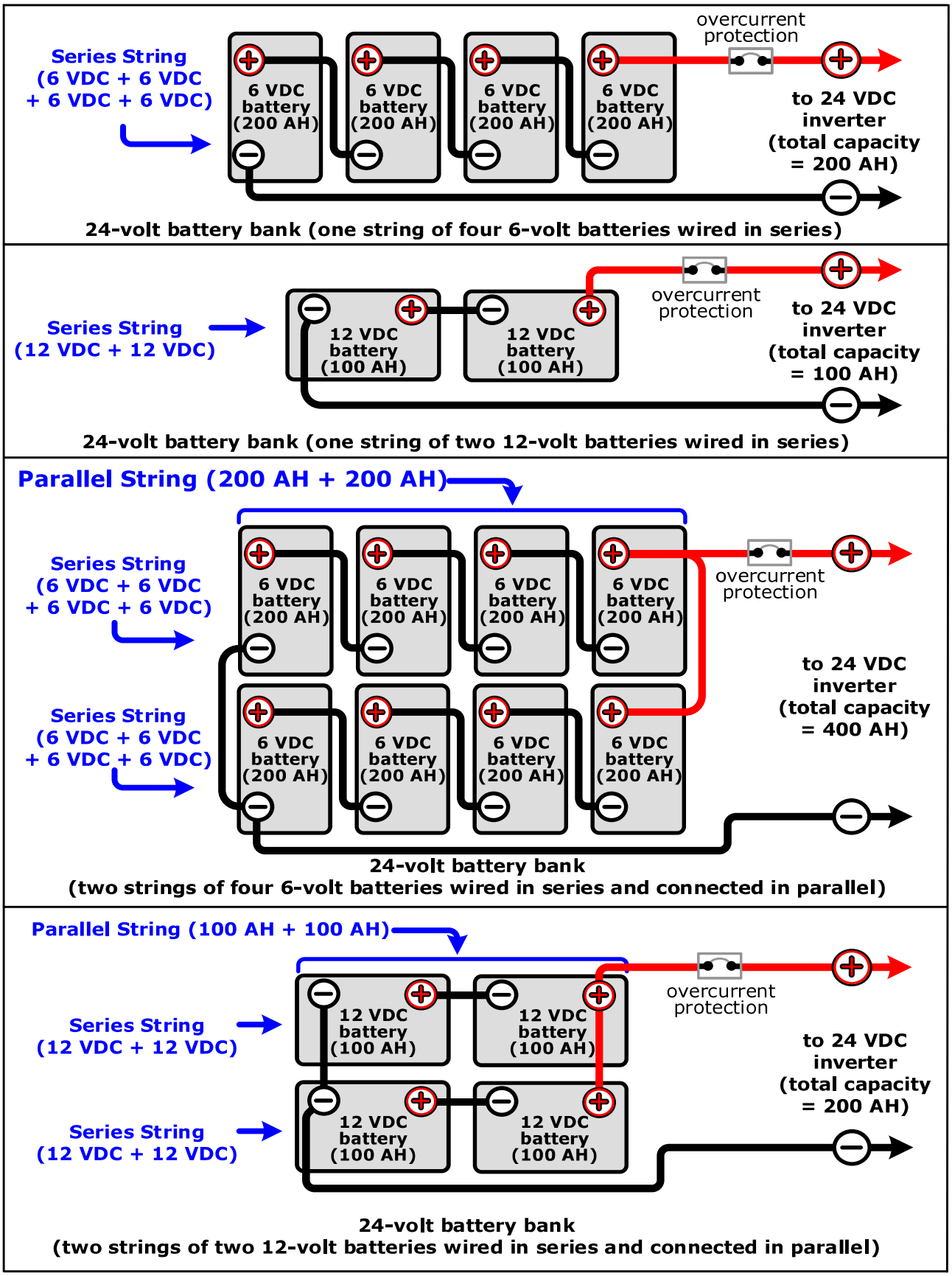

Figure B-4, Battery Bank Wiring Examples (24-volt)

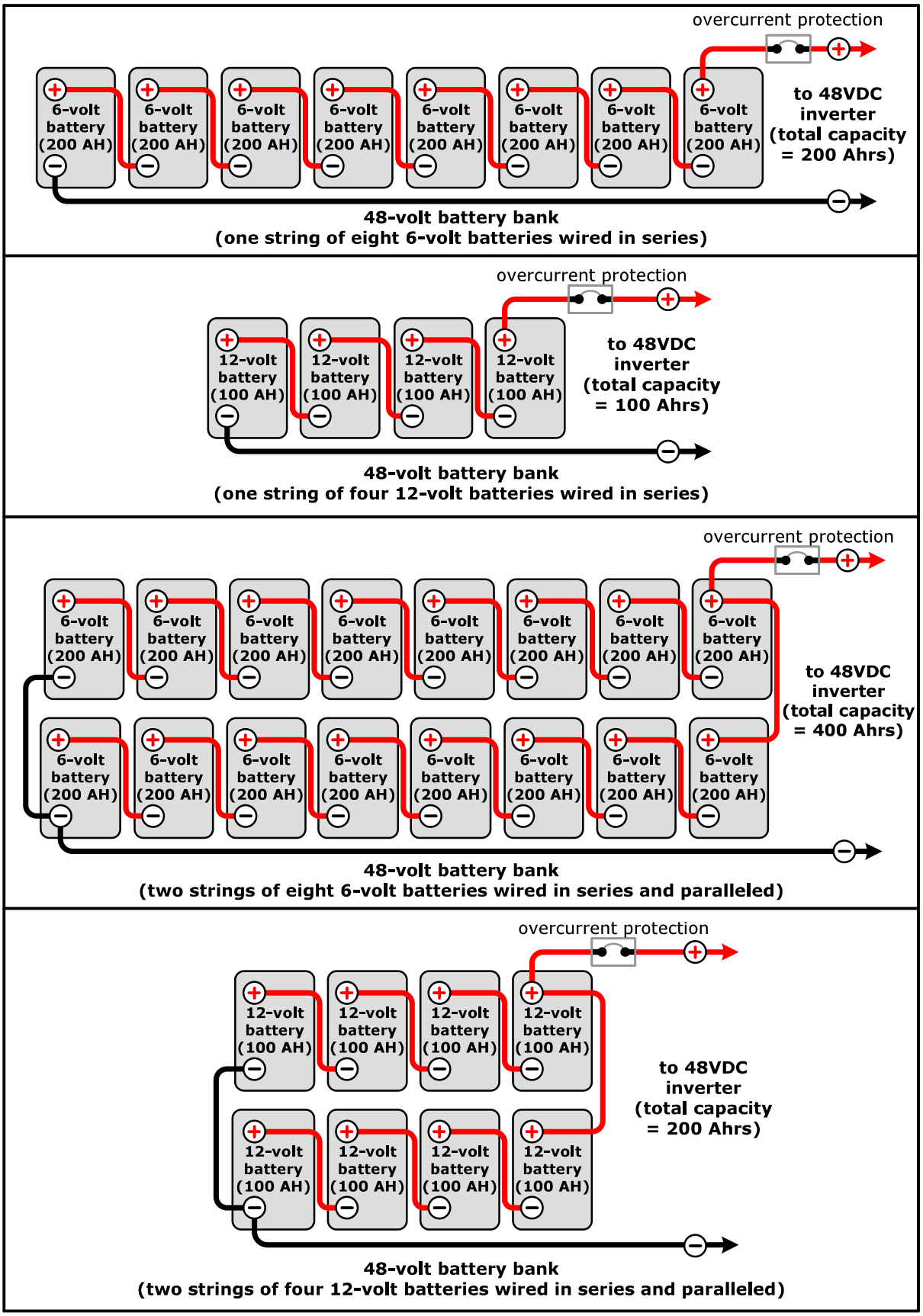

Figure B-5, Battery Bank Wiring Examples (48-volt)

Appendix C – Power Consumption and Output Waveforms

C-1 Appliance Power Consumption

The MS-PAE Series can power a wide range of household appliances including small motors, hair dryers, clocks, and other electrical devices. As with any appliance using batteries for power, there is a certain length of time that it can run—this is called "run time." Actual run time depends on several variables, including the size and the type of appliance, the type of batteries installed in your application, as well as the battery's capacity and age. Other factors such as the battery's state of charge and temperature can also affect the length of time your appliances can run.

Appliances such as TVs, stereos, computers, coffee pots, incandescent lights, and toasters can all be successfully powered by your inverter. Larger electrical appliances (such as stoves, water heaters, air conditioners, etc.) can quickly drain your batteries and are not recommended unless you have a large inverter system and compatible battery system. All electrical appliances are rated by the amount of power they consume (see Table C-1). See section B-5 (Battery Bank Sizing Worksheet) to determine the battery bank size needed based on your AC load profile.

Table C-1, Typical Appliance Power Consumption

Device (AC Load)	Wattage Rating	Device (AC Load)	Wattage Rating
Blender	400W	Coffee Maker	1200W
Computer	300W	Color TV (19")	150W
Drill	500W	Hair Dryer	1000W
Hot Plate	1800W	Iron	1000W
Light (flo)	10W	Light (inc)	100W
Microwave	100W	Refrigerator*	500W

** Refrigerators, freezers and water pumps typically only run about 1/3 of the time. When adding to the battery sizing worksheet, only list 1/3 of the total wattage rating of the appliance.*

C-2 Inverter Output Waveforms

The inverter's AC output waveform is the shape it makes as its voltage rises and falls with time. Today's inverters come in three basic output waveforms: square wave, modified sine wave, and pure sine wave (see Figure C-1).

- **Square Wave** – The simplest AC waveform. Some types of equipment behave strangely when powered from a square wave inverter.
- **Modified Sine Wave** – This AC waveform looks like a one-step staircase and its width continually changes to ensure the RMS output voltage is correct regardless of the battery voltage. Most loads that run from a sine wave will also run from a modified sine wave. However, things such as clocks and furnace controllers may have trouble.
- **Pure Sine Wave** – An AC waveform that looks like rolling waves on water. It rises and falls smoothly with time. The utility/grid puts out a sine waveform. Any plug-in AC equipment will operate from a sine wave inverter.

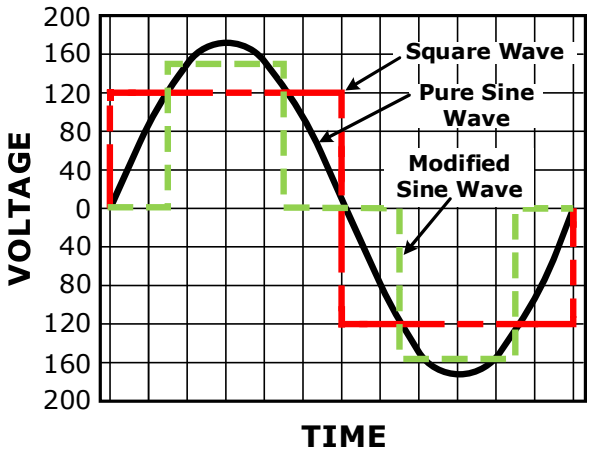

Figure C-1, AC Waveforms

Appendix D – Inverter/Charger Terminology

The following is a glossary of terms with which you may not be familiar. They appear in the various descriptions of inverter and battery charger operation.

Absorption Stage – In this second stage of three stage charging, the batteries are held at a constant voltage (the *Absorb Voltage* setting) and the battery is charged to its maximum capacity.

AC (Alternating Current) – Electrical current that varies with time (i.e., utility power). The rate at which the voltage changes polarity is the frequency in Hertz (Hz).

Ampacity – The ampacity of a wire is its current carrying capacity with reference to the cross-sectional area of the conductors, the temperature rating of the insulation and the ambient temperature.

Automatic Transfer Relay (inside the inverter) – An automatic switch that switches between Inverter and Standby mode depending on availability of AC input power. If AC is present, the unit will be a battery charger and pass power through the inverter. When the AC goes away, the unit becomes an inverter.

Bulk Charge Stage – The first stage in three stage charging. In this stage, a constant current is fed to the batteries and as they accept the current the battery voltage will rise.

CEC (Canadian Electrical Code) – The guidelines and acceptable practices for electrical installations in Canada.

Current (Amps) – The amount of electricity flowing through a conductor.

DC (Direct Current) – Electrical current that does not vary with time (i.e., battery voltage).

Deep Cycle – A deep cycle occurs when a battery is discharged to less than 20% of its capacity (80% depth-of-discharge).

Deep Cycle Battery – A battery designed to be routinely discharged to 20% of its maximum capacity without damage. This type of battery is recommended for use with an inverter system.

Derating – As an inverter (or charger) is used above its normal temperature, it's capacity to power loads (or charge) continuously is decreased.

Digital Volt Meter (DVM):

- **True RMS** – A voltmeter that incorporates a RMS converter to read true RMS for any waveform shape.
- **Averaging Type** – A voltmeter that requires a sine wave waveform shape to provide an accurate reading.

Efficiency – Usually given as a percentage, efficiency is the ratio of the output to the input. The efficiency changes with power output levels of any inverter.

Electrolyte – Typically a mixture of water and sulfuric acid that is used in lead-acid batteries; it is commonly referred to as battery acid.

Equalization – Controlled "overcharging" of the battery causing it to bubble and mix. This helps reduce stratification.

Float Stage – During the third stage of three-stage charging, the voltage and current are reduced to a level that will trickle charge or maintenance charge the battery. This assures the battery remains fully charged even while sitting.

Fuse or Disconnect – When current exceeds a preset limit the fuse or disconnect will fail before the wiring or equipment it is protecting. Disconnects are also called circuit breakers. These are usually reset and can act as a switch to turn off power to equipment for servicing.

Grid (The grid) – Also called the utility grid, this refers to the public power distribution system.

Impedance – Slows the electrical flow of alternating current (AC).

LED (Light Emitting Diode) – A light made up of semi-conducting material.

Line Tie (also Grid-Tie, or Utility-Interactive) – Term used when the inverter is connected to public power or to the "grid" system, and has the ability to sell power back to the grid.

Load(s) – An electrical item that draws power (i.e., lights, radio, refrigerator, etc.) to work.
Locked Rotor Amps – The current drawn by an electric motor with the shaft or rotor stopped and locked in position. This can be used to determine if an inverter has enough surge current to start a motor. If the inverter is capable of producing more amperage than the locked rotor amps rating of a motor, it will most likely start the motor easily.

NEC (National Electric Code) – The guidelines and acceptable practices for electrical installations in the USA.

Off Grid – Not connected to public power in any way.

Pass Through Current – The amount of current the inverter can safely pass directly from the AC input to the AC output.

Photovoltaic (PV) – Solar powered.

Resistance (Ohms) – Slows the electrical flow of direct current (DC).

RMS (Root Mean Square) – A measure of AC voltage that provides the equivalent heating value across a resistor as would a DC source of the same voltage.

Sellback, or **Selling Back To The Grid or Utility-Interactive** – Some inverters have the capability to take energy stored in batteries, or from solar panels, and put it back into the utility grid. The local public utility company can compensate you for using this energy.

> ***Note:*** *The MS-PAE is a standalone battery-based inverter. It does not have the ability to push or "sell" power back to the utility grid.*

Shorepower – The process of providing shoreside electrical power to a boat while its main and auxiliary engines are turned off. The source for shorepower may be grid power from an electric utility company, or from an external remote generator.

Stacking:

> **Series** – Two inverters operating together to produce twice the power and voltage of a single inverter. Required when operating 240 VAC loads and separate 120 VAC loads from either inverter.
>
> **Parallel** – Two inverters operating together to provide twice the continuous capacity on a single output circuit. Required when a single load is too large for one inverter.

Stratification – Over time, a battery's electrolyte (liquid) tends to separate. The electrolyte at the top of the battery becomes watery while at the bottom it becomes more acidic. This effect is corrosive to the plates.

Sulfating – As a battery discharges, its plates become covered with lead sulfate. During recharging, the lead sulfate leaves the plates and recombines with the electrolyte. If the lead sulfate remains on the plates for an extended period of time (over two months), it hardens, and recharging will not remove it. This reduces the effective plate area and the battery's capacity.

Temperature Compensation – Peak available battery voltage is temperature dependent. As ambient temperatures fall, the proper voltage for each charge stage needs to be increased. A Battery Temperature Sensor (BTS) automatically re-scales charge voltage settings to compensate for ambient temperatures.

Voltage – The pressure that causes electrical flow in a circuit.

Watts – Measure of power output or utilization. Watts = Volts x Amps.

Appendix E – PV Rapid Shutdown Compliance

E-1 PV Rapid Shutdown Compliance

This equipment is not listed as PVRSE (PV Rapid Shutdown Equipment) or for use as a component in a code-compliant PVRSS (PV Rapid Shutdown System) as defined by UL1741 and NEC article 690.12. This equipment does meet the performance requirement of reaching less than 30 VDC in 30 seconds when PV input voltage is disconnected. This product must be installed in a location outside of where conductors must be controlled in a PVRSS application.

MAGNUM ENERGY

DMX POWER

64-0032 F Owner’s Manual, MS-PAE