MAGNUM ENERGY

MS Series

Pure Sine Wave Inverter/Charger

Owner's Manual

DMX POWER

Disclaimer of Liability

The use of this manual and the conditions or methods of installation, operation, use, and maintenance of the MS Series inverter/charger is beyond the control of DMX Power. Therefore, this company does not assume responsibility and expressly disclaims liability for loss, damage, or expense whether direct, indirect, consequential or incidental that may arise out of or be any way connected with such installation, operation, use, or maintenance.

Due to continuous improvements and product updates, the images shown in this manual may not exactly match the unit purchased.

Restrictions on Use

The MS Series inverter/charger may only be used in life support devices and systems with the express written approval of DMX Power. Failure of this inverter can reasonably be expected to cause failure of that life support device or system, or to affect the safety or effectiveness of that device or system. If the MS Series inverter fails, it is reasonable to assume the health of the user or other persons may be endangered.

Copyright Notice

Copyright 2025 by DMX Power. All rights reserved. Permission to copy, distribute, and/or modify this document is prohibited without express written permission from DMX Power.

Document Information

Description – MS Series Owner's Manual
Part Number and Revision – 64-0007 Rev M
Date Published – June 2026

For the latest version of DMX documentation including this manual see the documentation menu on our website at: www.dmx-power.com

Contact Information

DMX Power
Phone (Toll-Free): 800-553-6418 or 651-653-7000
Technical Questions: support@dmx-power.com
Warranty or RMA: warranty@dmx-power.com
Web: www.dmx-power.com

Statement of Appreciation

Thank you from all of us at DMX Power for purchasing this MS Series inverter/charger.

At DMX Power, we are committed to providing you with quality products and services, and hope that your experience with us is pleasant and professional.

Record unit's model & serial number in case you need to provide this information in the future.		
Model:		
☐	MS2000 (–15B/–20B)	
☐	MS2012 (–15B/–20B)	
☐	MS2812	
☐	MS2024	
☐	MS4024	
☐	MS4048 (–20B)	

IMPORTANT SAFETY INSTRUCTIONS
SAVE THESE INSTRUCTIONS

THIS MANUAL CONTAINS IMPORTANT INSTRUCTIONS FOR THE MS SERIES INVERTER/CHARGER THAT SHALL BE FOLLOWED DURING THE INSTALLATION AND OPERATION OF THIS PRODUCT. Before using the MS Series, read all instructions and cautionary markings. Also, be sure to review the individual manuals provided for each component of the system. The installation instructions are for use by qualified personnel only. Do not perform any installation or servicing other than that specified in this owner's manual unless you are qualified to do so. Incorrect installation or servicing may result in a risk of electric shock, fire, or other safety hazard.

Safety Symbols

The following safety symbols have been placed throughout this manual to indicate dangerous and important safety instructions.

DANGER

Indicates a hazardous situation which, if not avoided, will result in death or serious injury.

WARNING

This symbol indicates that failure to take a specified action could result in physical harm to the user.

CAUTION

This symbol indicates that failure to take a specified action could result in damage to the equipment.

NOTICE

This symbol indicates information that emphasizes or supplements important points of the main text.

Safety Precautions

- All electrical work must be performed in accordance with local and national electrical codes.
    - Use Class 1 wiring methods for field wiring connections to terminals of a Class 2 circuit.
    - Use only copper wires with a minimum temperature rating of 90°C (194°F).
    - AC wiring must be no less than 10 AWG (5.3 mm²) gauge copper wire.
    - Battery cables should have a crimped and sealed copper ring terminal lug with a 5/16 hole to connect to the DC terminals on the inverter.
    - Torque all AC wiring connections and DC cable connections to the required torque values.
    - Power inverters contain a circuit breaker and a capacitor that may produce a spark upon connection or during normal operation.
    - This unit is provided with integral protection against overloads.
- The inverter must be properly mounted, see Section 2.2 "Mounting the Inverter" in this manual.
    - This product is designed for indoor/compartment installation. It must not be exposed to rain, snow, moisture, or liquids of any type.
    - Do not install the product in a zero-clearance closure.

Safety Information

- Always verify proper wiring prior to starting the inverter.
- There are no user-serviceable parts contained in this product.
- Listed or labeled equipment shall be installed and used in accordance with any instructions included in the listing or labeling.

⚠WARNING

- All electrical work must be performed in accordance with local and national electrical codes.
- Live power may be present at more than one point since an inverter utilizes both DC (batteries, PV, etc.,) and AC (utility or generator) power. To reduce risk of electric shock, ensure all DC and AC wiring is disconnected prior to installing or performing maintenance on the inverter. Turning off the inverter will not reduce this risk, the inverter must be totally disconnected from all sources.
- Power inverters produce hazardous voltages. To avoid risk of harm or fire, the unit must be properly installed.
- Do not mount in a confined battery or gas compartment.

⚠CAUTION

- Use insulated tools to reduce the chance of electrical shock or accidental short circuits.
- The AC output neutral conductor and the DC negative conductors are <u>not</u> connected (bonded) to the inverter chassis. Both the input and output conductors are isolated from the enclosure and each other. System grounding, if required, is the responsibility of the system installer and must comply with local and national electrical codes and standards. Refer to the Section 2.6 “Grounding Inverters” for more information.
- Overcurrent protection for the battery supply is <u>not</u> provided as an integral part of this inverter. Overcurrent protection of the battery cables <u>must</u> be provided as part of the system installation. Refer to Section 2.4 “DC Wiring” for more information.
- Overcurrent protection for the AC output wiring is <u>not</u> provided as an integral part of this inverter. Overcurrent protection of the AC output wiring <u>must</u> be provided as part of the system installation. Refer to Section 2.5 “AC Wiring” for more information.

Battery Safety

- Batteries are sensitive to changes in temperature. Install batteries in a stable environment.
- Provide at least one inch (2.5 cm) of air space between batteries to provide optimum cooling.
- The battery bank should be installed in a clean, dry, ventilated environment where they are protected from high and low temperatures. If installed in a vehicle/boat, the batteries must be mounted upright (if using liquid batteries) and securely fastened.

⚠DANGER

- Use extreme care and insulated tools working around batteries. If short-circuited, a battery can produce extremely high currents (e.g., dropping a metal tool across the battery terminal), which could cause shock, fire, or explosion.

⚠WARNING

- Read and follow the battery manufacturer's safety precautions before installing the inverter and batteries. Always verify proper polarity and voltage before connecting the batteries to the inverter. Once the batteries are connected to the inverter, ensure the maintenance and charging requirements (i.e., charge voltage and charge rate) provided by the battery manufacturer are followed to extend the life of the batteries and to prevent damage to the batteries while charging.
- Batteries can produce explosive gasses, so install batteries in a well-ventilated area. For compartment or enclosure installations, always vent batteries from the highest point to the outside. Design the battery enclosure to prevent accumulation and concentration of hydrogen gas in "pockets" at the top of the compartment.
- Never smoke or allow a spark near batteries.
- To prevent a spark at the battery and reduce the chance of explosion, always connect the cables to the batteries first. Then connect the cables to the inverter.
- The location must be fully accessible and protected from exposure to heat producing devices, and away from any fuel tanks.
- A fuse must be installed between the battery and the inverter to protect against shorted cables.

⚠CAUTION

- Wear eye protection such as safety glasses, and avoid touching your eyes and face when working with batteries to keep any fluid/corrosion on the battery from coming in contact with eyes and skin. Have plenty of fresh water and soap nearby and thoroughly wash in case battery acid contacts skin, clothing, or eyes. In the event of exposure to the eyes, flood them for at least 15 minutes with running water and seek immediate medical attention. Baking soda neutralizes lead acid battery electrolyte and vinegar neutralizes spilled NiCad and NiFe battery electrolyte; depending on your battery type, keep a supply on hand near the batteries.

⚠CAUTION

- Remove all jewelry such as rings, watches, bracelets, etc., when installing or performing maintenance on the batteries and inverter. A battery can produce a short-circuit current high enough to weld metal jewelry, causing severe burns.
- Never work alone. Always have someone within the range of your voice or close enough to come to your aid when working around batteries.
- Use proper lifting techniques when working with batteries.
- Never use old or untested batteries. Check each battery's label for age, type, and date code to ensure all batteries are identical.
- Never charge a frozen battery.

NOTICE

- The converter/inverter is intended to recharge batteries. The battery that is connected to this product is only suitable if it complies with the given battery standard for that battery type and is provided with a battery management system that will monitor and control the electrical and thermal health of the battery during charging. When installing this converter/inverter, the battery is to be verified as in compliance with the applicable battery standard.

CONSIGNES DE SÉCURITÉ IMPORTANTES

CONSERVER CES INSTRUCTIONS

CE MANUEL CONTIENT DE IMPORTANTES POUR LA SÉRIE MS ONDULEUR/CHARGEUR QUI DOIVENT ETRE SUIVIES PENDANT L'INSTALLATION ET FONCTIONNEMENT DE CE PRODUIT. Avant d'utiliser la série MS, lire toutes les instructions etles mises en garde. Aussi, n'oubliez pas depasser en revue les différents manuels fournispour chaque composant du système. Lesinstructions d'installation sont pour une utilisationpar du personnel qualifié. Ne pas effectuer une installation ou d'entretien autres que ceux spécifiés dans ce manuel, sauf si vous êtes qualifié pour le faire. Une mauvaise installation ou d'entretien peut entraîner un risque de choc électrique, un incendie ou autre danger pour la sécurité.

Symboles de sécurité

Les symboles de sécurité suivants ont été placéstout au long de ce manuel pour indiquer des conditions dangereuses et les consignes de sécurité importantes.

DANGER

Indique une situation dangereuse qui, si elle n'est pas évitée, entraînera la mort ou des blessures graves.

WARNING

Ce symbole indique que le défaut de prendre une action spécifiée pourraitcauser des dommages physiques à l'utilisateur.

CAUTION

Ce symbole indique que le défaut de prendre une action spécifiée peut entraîner des dommages à l'équipement.

NOTICE

Ce symbole indique une information qui met l'accent ou des suppléments points importants du texte principal.

Consignes de sécurité

- Tous les travaux électriques doivent être effectués conformément aux codes électriques locaux et na tionaux.
    - Utilisez des méthodes de câblage de classe 1 pour les connexions de câblage sur le terrain aux bornes d'un circuit de classe 2.
    - Utilisez uniquement des fils en cuivre ayant une température minimale de fonctionnement de 90°C (194°F).
    - Le câblage AC ne doit pas être inférieur à un câble en cuivre de 10 AWG (5,3 mm²).
    - Les câbles de batterie doivent avoir un œillet à embase en cuivre serti et scellé avec un trou de 5/16 pour se connecter aux bornes CC de l'onduleur.
    - Serrer tous les raccords de câblage AC et les raccords de câble DC aux valeurs de couple req uises.
    - Les onduleurs de puissance contiennent un disjoncteur et un condensateur qui peuvent produire une étincelle lors de la connexion ou pendant le fonctionnement normal.
    - Cette unité est dotée d'une protection intégrale contre les surcharges.

- Il n'y a pas de pièces réparables par l'utilisateur dans ce produit.
- L'équipement listé ou étiqueté doit être installé et utilisé conformément à toutes les instructions in cluses dans la liste ou l'étiquetage.
- L'onduleur doit être correctement monté, voir la section 2.2 "Montage de l'onduleur" dans ce manuel.
    - Ce produit est conçu pour une installation en intérieur ou en compartiment. Il ne doit pas être exposé à la pluie, à la neige, à l'humidité ou à tout type de liquide.
    - Ne pas installer le produit dans une fermeture à zéro dégagement.
- Vérifiez toujours le câblage approprié avant de démarrer l'onduleur.

⚠WARNING

- Tous les travaux électriques doivent être effectués conformément aux codes électriques locaux et nationaux.
- L'alimentation sous tension peut être présente à plus d'un point puisqu'un onduleur utilise à la fois l'alimentation DC (batteries, PV, etc.) et AC (utilitaire ou générateur). Pour réduire le risque de choc électrique, assurez-vous que tous les câbles DC et AC sont déconnectés avant d'installer ou d'effectuer la maintenance sur l'onduleur. L'arrêt de l'onduleur ne réduira pas ce risque, l'onduleur doit être totalement déconnecté de toutes sources.
- Les onduleurs produisent des tensions dangereuses. Pour éviter tout risque de blessure ou d'incendie, l'appareil doit être correctement installé.
- Ne pas monter dans un compartiment de batterie ou de gaz confiné.

⚠CAUTION

- Utilisez des outils isolés pour réduire les risques de choc électrique ou de courts-circuits accidentels.
- Le conducteur neutre de sortie AC et les conducteurs négatifs DC ne sont pas connectés (liés) au châssis de l'onduleur. Les conducteurs d'entrée et de sortie sont isolés du boîtier et les uns des autres. La mise à la terre du système, si nécessaire, relève de la responsabilité de l'installateur du système et doit être conforme aux codes et normes électriques locaux et nationaux. Reportez-vous à la section 2.6 « Mise à la terre des onduleurs » pour plus d'informations.
- La protection contre les surintensités pour l'alimentation par batterie n'est pas fournie en tant que partie intégrante de cet onduleur. Une protection contre les surintensités des câbles de batterie doit être fournie dans le cadre de l'installation du système. Reportez-vous à la section 2.4 « Câblage DC » pour plus d'informations.
- La protection contre les surintensités pour le câblage de sortie AC n'est pas fournie en tant que partie intégrante de cet onduleur. Une protection contre les surintensités du câblage de sortie AC doit être fournie dans le cadre de l'installation du système. Reportez-vous à la section 2.5 « Câblage AC » pour plus d'informations.

Sécurité de la Batterie

- Les batteries sont sensibles aux changements de température. Installez les piles dans un environnement stable.
- Prévoyez au moins 2,5 cm d'espace d'air entre les batteries pour assurer un refroidissement optimal.
- Le parc de batteries doit être installé dans un environnement propre, sec et ventilé où il est protégé des températures élevées et basses. Si elles sont installées dans un véhicule/bateau, les batteries doivent être montées verticalement (si vous utilisez des batteries liquides) et solidement fixées.

⚠DANGER

- Utilisez une extrême prudence et des outils isolés lorsque vous travaillez autour des batteries. En cas de court-circuit, une batterie peut produire des courants extrêmement élevés (par exemple, en faisant tomber un outil en métal sur les bornes de la batterie), ce qui pourrait provoquer un choc, un incendie ou une explosion.

⚠WARNING

- Lisez et suivez les précautions de sécurité du fabricant de la batterie avant d'installer l'onduleur et les batteries. Vérifiez toujours la polarité et la tension appropriées avant de connecter les batteries à l'onduleur. Une fois les batteries connectées à l'onduleur, assurez-vous que les exigences de maintenance et de charge (c'est-à-dire la tension de charge et le taux de charge) fournies par le fabricant de la batterie sont respectées pour prolonger la durée de vie des batteries et éviter d'endommager les batteries pendant la charge.
- Les batteries peuvent produire des gaz explosifs, installez donc les batteries dans un endroit bien ventilé. Pour les installations dans un compartiment ou une enceinte, ventilez toujours les batteries du point le plus élevé vers l'extérieur. Concevez le boîtier de la batterie pour empêcher l'accumulation et la concentration d'hydrogène gazeux dans les « poches » situées en haut du compartiment.
- Ne fumez jamais et ne laissez jamais d'étincelles à proximité des batteries.
- Pour éviter une étincelle au niveau de la batterie et réduire le risque d'explosion, connectez toujours les câbles aux batteries en premier. Connectez ensuite les câbles à l'onduleur.
- L'emplacement doit être entièrement accessible et protégé de l'exposition aux appareils produisant de la chaleur, et éloigné de tout réservoir de carburant.
- Un fusible doit être installé entre la batterie et l'onduleur pour se protéger contre les courts-circuits.

⚠CAUTION

- Portez des lunettes de protection telles que des lunettes de sécurité et évitez de toucher vos yeux et votre visage lorsque vous travaillez avec des batteries afin d'éviter que tout liquide/corrosion sur la batterie n'entre en contact avec les yeux et la peau. Ayez beaucoup d'eau fraîche et de savon à proximité et lavez-vous soigneusement au cas où l'acide de la batterie entrerait en contact avec la peau, les vêtements ou les yeux. En cas d'exposition des yeux, inonder ceux-ci pendant au moins 15 minutes avec de l'eau courante et consulter immédiatement un médecin. Le bicarbonate de soude neutralise l'électrolyte des batteries au plomb et le vinaigre neutralise les électrolytes des batteries NiCad et NiFe déversés ; en fonction de votre type de batterie, gardez une réserve à portée de main à proximité des batteries.
- Retirez tous les bijoux tels que bagues, montres, bracelets, etc., lors de l'installation ou de l'entretien des batteries et de l'onduleur. Une batterie peut produire un courant de court-circuit suffisamment élevé pour souder des bijoux en métal, provoquant ainsi de graves brûlures.
- Ne travaillez jamais seul. Ayez toujours quelqu'un à portée de voix ou suffisamment près pour vous venir en aide lorsque vous travaillez à proximité de batteries.
- Utilisez des techniques de levage appropriées lorsque vous travaillez avec des batteries.
- N'utilisez jamais de piles anciennes ou non testées. Vérifiez l'étiquette de chaque batterie pour connaître l'âge, le type et le code de date pour vous assurer que toutes les batteries sont identiques.
- Ne chargez jamais une batterie gelée.

NOTICE

- Le convertisseur/onduleur est destiné à recharger des batteries. La batterie connectée à ce produit n'est adaptée que si elle est conforme à la norme de batterie donnée pour ce type de batterie et si elle est équipée d'un système de gestion de batterie qui surveillera et contrôlera la santé électrique et thermique de la batterie pendant la charge. Lors de l'installation de ce convertisseur/onduleur, la batterie doit être vérifiée comme étant conforme à la norme de batterie applicable.

Table of Contents

1.0 Introduction 1
1.1 How an Inverter/Charger Works 2
1.1.1 Inverter Applications for Permanent Installations 2
1.1.2 Inverter Applications for Mobile Installations 2
1.2 Advantages of a Pure Sine Wave vs a Modified Sine Wave Inverter 2
1.3 Features and Benefits 3
2.0 Installation 7
2.1 Pre-Installation 8
2.1.1 Unpacking and Inspection 8
2.1.2 Required Tools and Materials 8
2.1.3 Locating the Inverter 11
2.2 Mounting the Inverter 12
2.3 Wiring the Inverter – General Requirements 16
2.3.1 Protecting Wire – Conduit Box 16
2.3.2 Wiring Requirements 16
2.3.3 Wire Routing 17
2.3.4 Torque Requirements 17
2.4 DC Wiring 17
2.4.1 DC Wire Sizing 20
2.4.2 DC Overcurrent Protection 20
2.4.3 DC Cable Connections 21
2.4.4 Wiring the Battery Bank 22
2.4.5 Battery Temperature Sensor Installation and Wiring 23
2.4.6 Wiring the Inverter to the Battery Bank 24
2.5 AC Wiring 26
2.5.1 Pre-AC Wiring Requirements 26
2.5.2 AC Wire Size and Overcurrent Protection 26
2.5.3 Recommended GFCI (Ground Fault Circuit Interruption) Outlets 27
2.5.4 AC Terminal Connections (MS2012, MS2812, MS2024, MS4024, & MS4048) 27
2.5.5 AC Conductor Wiring (MS2012, MS2812, MS2024, MS4024, & MS4048) 29
2.5.6 AC Wiring Configurations (MS2012, MS2812, MS2024, MS4024, & MS4048) 31
2.5.7 AC Conductor Wiring (MS2000 models) 37
2.5.8 AC Wiring Configuration (MS2000 models) 38
2.6 Grounding Inverters 41
2.6.1 Sizing the Grounding Electrode Conductors 42
2.6.2 System Bonding Jumper 44
2.6.3 Equipment Grounding Conductor 44
2.6.4 Grounding on Boats 45
2.6.5 Neutral to Safety Ground Bonding 46
2.6.6 Disabling the Neutral-to-Ground Connection 47
2.6.7 Connecting a Large DC Ground Wire 48
2.7 Inverter Notification Requirements 48
2.7.1 Facilities with Standalone Systems 49
2.7.2 Facilities with Utility Services and PV Systems 49
2.7.3 Inverter Warning Label 49
2.8 Final Inspection 49
2.9 Functional Test 50

Table of Contents (Cont.)

3.0 Operation 52
3.1 Inverter Mode 52
3.2 Standby Mode 54
3.3 Battery Charging 55
3.4 Transfer Time 57
3.5 Battery Temperature Sensor Operation 58
3.6 Protection Circuitry Operation 58
3.7 Inverter Startup 59
3.8 Factory Default Values 61
3.9 Inverter Fan Operation 62
3.10 Using a Remote with the MS Series Inverter 62
4.0 Maintenance and Troubleshooting 63
4.1 Recommended Inverter and Battery Care 63
4.2 Storage for Mobile Installations 63
4.3 Troubleshooting 64
4.4 Resetting the Inverter 65
4.4.1 Performing an Inverter Reset 65
4.4.2 Performing a Power Reset 66
Appendix A – Specifications and Optional Equipment 67
A-1 Inverter/Charger Specifications 67
A-2 Inverter Efficiency 68
A-3 AC Input Voltage to Output Charge Amps 68
A-4 Temperature and Inverter Output 69
A-5 Temperature and Charger Output 69
A-6 Optional Equipment and Accessories 70
Appendix B – Battery Information 71
B-1 Battery Location 71
B-2 Battery Types 71
B-3 Battery Temperature 72
B-4 Battery Bank Sizing 72
B-5 Battery Bank Sizing Worksheet 73
B-6 Battery Wiring Configurations 74
B-6.1 Series Wiring 74
B-6.2 Parallel Wiring 74
B-6.3 Series-Parallel Wiring 74
Appendix C – Power Consumption & Output Waveforms 78
C-1 Appliances and Run Time 78
C-2 Output Waveform 78
Appendix D – Inverter/Charger Terminology 79

List of Figures

Figure 1-1, Power Switch, Status LED, and Accessory Connection Ports 3
Figure 1-2, Electrical Connection Points 4
Figure 1-3, Left Side Features (MS2012, MS2812, MS2024, MS4024, MS4048) 6
Figure 1-4, Left Side Features (MS2000 Series) 6
Figure 2-1, Simplified Installation for Permanent Installations (MS Series) 9
Figure 2-2, Simplified Installation for Permanent Installations (MS2000) 10
Figure 2-3, Approved Mounting Positions 13
Figure 2-4, MS Dimensions (MS2012, MS2812, MS2024, MS4024, MS4048) 14
Figure 2-5, MS Dimensions (MS2000) 15
Figure 2-6, DC and Battery Temperature Sensor Wiring 19
Figure 2-7, Battery Hardware Installation 22
Figure 2-8, Inverter DC Hardware Installation 22
Figure 2-9, Battery Temperature Sensor 24
Figure 2-10, AC Terminal Block 28
Figure 2-11, AC Wiring for Single In – Single Out (30 A) Configurations 32
Figure 2-12, AC Wiring for Single In – Single Out (60 A) Configurations 33
Figure 2-13, AC Wiring for Single In – Dual Out Configurations 34
Figure 2-14, AC Wiring for Dual In – Single Out Configurations 35
Figure 2-15, AC Wiring for Dual In – Dual Out Configurations 36
Figure 2-16, AC Wiring for MS2000 Models 39
Figure 2-17, AC Wiring for MS2000-15B/-20B Models 40
Figure 2-18, Grounding System for MS Series 41
Figure 2-19, Multiple Connections to DC Ground Rod (Method 1) 42
Figure 2-20, Multiple Connections to DC Ground Rod (Method 2) 43
Figure 2-21, Single Connection to DC Ground Rod (Method 3) 43
Figure 2-22, Neutral-to-Ground Connection (Inverter Mode) 47
Figure 2-23, Neutral-to-Ground Connection (Standby Mode) 47
Figure 2-24, Disconnecting the Neutral-to-Ground Connection 48
Figure 2-25, Connecting a Large DC Ground Wire 48
Figure 2-26, Warning Label 49
Figure 2-27, AC Voltage Checks 51
Figure 2-28, AC Voltage Checks (MS2000 models) 51
Figure 2-29, AC Voltage Checks (MS2000-15B/20B models) 51
Figure 3-1, Power Flow – Inverter Mode (MS2012/2812/2024/4024/4048) 52
Figure 3-2, Power Flow – Inverter Mode (MS2000 models) 53
Figure 3-3, Power Flow – Inverter Mode (MS2000-15B/-20B models) 53
Figure 3-4, Power Flow – Standby Mode (MS2012/2812/2024/4024/4048) 54
Figure 3-5, Power Flow – Standby Mode (MS2000 models) 54
Figure 3-6, Power Flow – Standby Mode (MS2000-15B/-20B models) 55
Figure 3-7, Automatic 4-Stage Charging Graph 57
Figure 3-8, BTS Temperature to Charge Voltage Change 58
Figure 3-9, Power Switch and Status Indicator 60
Figure 4-1, Performing an Inverter Reset 65
Figure A-1, MS Series Efficiency Chart 68
Figure A-2, MS Series VAC Input to Charge Amps 68
Figure A-3, Temperature to Continuous Inverter Output Power 69
Figure A-4, Temperature to Continuous Charger Output Current 69

List of Figures (Cont.)

Figure B-1, Series Battery Wiring 74
Figure B-2, Parallel Battery Wiring 74
Figure B-3, Series-Parallel Battery Wiring 74
Figure B-4, Battery Bank Wiring Examples (12-volt) 75
Figure B-5, Battery Bank Wiring Examples (24-volt) 76
Figure B-6, Battery Bank Wiring Examples (48-volt) 77
Figure C-1, AC Waveforms 78

List of Tables

Table 2-1, Recommended DC Wire/Overcurrent Device for Rated Use 20
Table 2-2, DC Wire Size For Increased Distance 21
Table 2-3, AC Input/Output Wiring Configurations 31
Table 2-4, AC Input/Output Wiring Configurations (MS2000 models).....38
Table 2-5, AC Grounding Electrode Conductor Sizing 42
Table 2-6, Equipment Grounding Conductor Sizing 45
Table 3-1, Inverter Battery Turn On/Off Levels.....59
Table 3-2, Inverter/Charger Default Values 61
Table 3-3, Inverter Compatibility Level 62
Table 4-1, Basic Troubleshooting.....64
Table C-1, Typical Appliance Power Consumption.....78

1.0 Introduction

Congratulations on your purchase of a MS Series inverter/charger from Magnum Inverters. The MS Series is a "pure" sine wave inverter designed especially for rugged mobile applications, home backup power, and standalone applications. Powerful, yet simple to use, this inverter/charger will provide you with years of trouble-free performance you have come to expect from Magnum Inverters

Installation is easy. Simply connect the inverter's output to your distribution circuits or electrical panel, connect your utility or AC generator power to the inverter's easy-to-reach terminal block, connect the batteries, and then switch it on for power.

NOTICE

This is a sizable manual and much of it is fairly technical. Terms may be used throughout the manual that are unfamiliar to you. Refer to the Inverter/Charger Terminology glossary in Appendix D for clarification.

The MS Series inverter/charger includes the following:

- 2000, 2800, or 4000 watt model in a small footprint—less area needed for installation
- Pure sine wave output
- Automatic PFC (Power Factor Corrected) multi-stage battery charging
- RS485 standard communication protocol
- Remote and Network ports (easy connection for optional accessories)
- Inverter-mounted ON/OFF switch with LED indicator
- 30-amp per leg AC pass-through capability
- Field serviceable for qualified personnel—tested repair kits available
- Automatic battery temperature compensation (when using the Battery Temperature Sensor) for optimum charging even during extreme temperature changes
- Overcurrent, over-temperature, and high/low battery voltage protection

Regulatory Compliance

The MS Series inverter/charger is designated as a Standalone (non grid-interactive) power inverter with an internal battery charger. It can be connected to the utility grid (or to a generator) to allow the inverter batteries to be charged, and to power inverter loads while connected. The MS series is not a grid-interactive (also known as utility-interactive) inverter and does not have the capability to export (or sell) power back into the utility grid.

The MS Series has been tested and listed to UL 458, 5th Edition (Power Converters/Inverters and Power Converter/Inverter Systems for Land Vehicles and Marine Crafts) for use in the US; and is also certified to CSA C22.2 No. 107.1-01 (General Use Power Supplies) for use in Canada. It has been tested and certified to these product safety standards by Intertek Testing Services (known as ETL), which is a Nationally Recognized Testing Laboratory (NRTL). NRTL's are qualified organizations that meet Occupational Safety and Health Administration (OSHA) regulations to perform independent safety testing and product certification.

The MS Series also meets the KKK-A-1822E standard for use in ambulances.

1.1 How an Inverter/Charger Works

There are two modes of operation associated with this inverter/charger:

Inverter Mode

When the inverter is properly connected to batteries and turned on, the direct current (DC) from the batteries is transformed into a pure sine wave alternating current (AC). This AC is similar to the voltage provided by your utility and is used to power any electrical appliances (i.e., AC loads) connected to the inverter's output.

Standby Mode

When an external source of AC power (i.e., utility power or generator) is connected and qualified on the inverter's AC input, it operates in Standby mode. In Standby mode, the unit operates as a battery charger to convert the incoming AC power into DC power to recharge the batteries; and at the same time, automatically closes an internal AC transfer relay to pass the incoming AC power directly to the inverter's output to continue powering the connected electrical appliances.

1.1.1 Inverter Applications for Permanent Installations

An inverter can be used for backup power in a permanent location that normally uses utility power, such as a home or office. When utility power is available, the inverter keeps the batteries charged. When the utility power fails, the inverter comes on automatically to supply AC power to your home or office during the power failure. For a home or business, reliable backup power is needed to prevent lost computer data, or to maintain lights and keep food fresh in the refrigerator/freezer. The inverter allows AC electrical appliances to be run from the storage battery bank. When the battery bank becomes discharged, either renewable DC sources (solar, wind, or hydro power) can be used to recharge the batteries, or a generator can be connected to the inverter to power the system while the batteries recharge.

1.1.2 Inverter Applications for Mobile Installations

Inverters can also be used to provide power in mobile situations, such as in an RV, truck, or boat. In these applications, the inverter provides power to the AC loads using the energy stored in the batteries and recharges the batteries when shorepower or an onboard generator is available.

1.2 Advantages of a Pure Sine Wave vs a Modified Sine Wave Inverter

Today's inverters come in three basic output waveforms: square wave, modified sine wave (which is actually a modified square wave) and pure sine wave (see Figure C-1 in Appendix C). Modified sine wave inverters approximate a pure sine wave form and will run most appliances and electronics without any problems. These inverters are less expensive, and therefore, offer a viable alternative to more expensive pure sine inverters.

The output of the MS Series inverter—which is pure sine wave—is equal to, or in many cases, better than the utility power used in your home. Virtually any electronic device will operate from a pure sine wave inverter. Motors run cooler, microwaves usually cook faster, and clocks keep better time just to name a few examples. Without compromising quality or performance, the MagnaSine provides you with all the advantages of a pure sine wave inverter at a much lower cost than many on the market.

The MS Series is built on the same platform as our popular legacy Magnum modified sine wave inverters—allowing for an easy upgrade to a pure sine wave inverter. This standard platform also helps reduce cost by using standard parts/accessories across many models. DMX Power accessories such as the Advanced Remote Control (ME-ARC), Standard Remote Control (ME-RC), Automatic Generator Start – Networked (ME-AGS-N), and Battery Monitor Kit (ME-BMK) can be used (see Section A-6 in Appendix A).

1.3 Features and Benefits

The MS Series inverter/charger is designed to allow easy access to wiring, circuit breakers, and controls. Its die cast baseplate with one-piece aluminum cover ensures maximum durability with minimum weight, as well as a cooler, more efficient operation.

Note: *While not pictured, the MS2000 models have the same features as those listed in this section.*

The MS inverter is equipped with the following features (refer to Figures 1-1 and 1-2):

1. **Power ON/OFF Switch** – a momentary pushbutton switch that alternately turns the inverter on or off.
2. **Charging/Inverting LED Indicator** – this green LED illuminates to provide status information on inverter or charger operation.
3. **Stack/Accessories Connection Port (red label)** – a RJ11 port that accepts the optional RSAs (Remote Switch Adapters) for remote on/off switch operation. Stacking is not supported on these models.
4. **Network Connection Port (green label)** – a RJ11 port that accepts optional network capable accessories (i.e., Auto Gen Start or Battery Monitor).
5. **Remote Connection Port (blue label)** – a RJ11 port that allows an optional remote control to be connected.
6. **Battery Temperature Sensor Connection Port (yellow label)** – a RJ11 port that accepts the remote Battery Temperature Sensor (BTS).

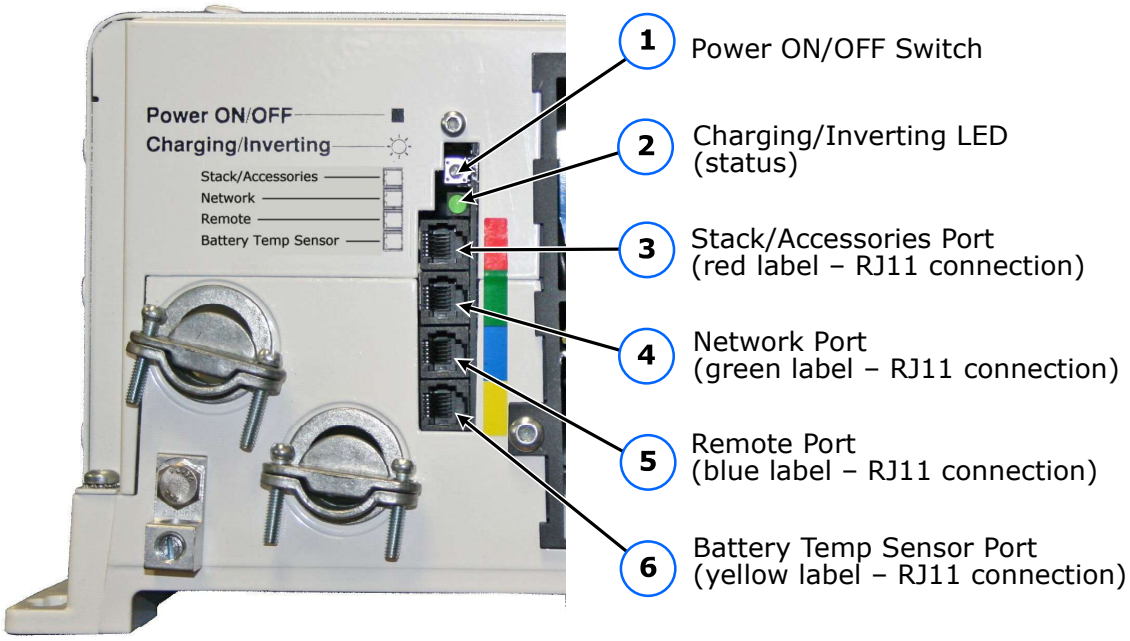

Figure 1-1, Power Switch, Status LED, and Accessory Connection Ports

7 **DC Equipment Ground Terminal** – this connection is used to tie the exposed chassis of the inverter to the DC grounding system. This terminal accepts CU/AL conductors from #14 to #2 AWG (2.1 to 33.6 mm2). Tightening torque is 45 in-lb.

8 **AC Entry/Exit Connections** – two 3/4" knockouts provided with cable-clamp strain reliefs to accommodate and secure the AC input and output field wiring.

9 **Intake Air Vents** – ventilation openings to pull in air to help keep the inverter cool for peak performance.

10 **Positive DC Terminal** – provides a 360 degree connection point for the positive (+) cable from the battery bank; consists of a 5/16-18 bolt with a Kep or Flange nut that holds the battery cable to the DC terminal.

11 **Negative DC Terminal** – provides a 360 degree connection point for the negative (–) cable from the battery bank; consists of a 5/16-18 bolt with a Kep or Flange nut that holds the battery cable to the DC terminal.

12 **Mounting Flange** – used to secure the inverter to a shelf or wall.

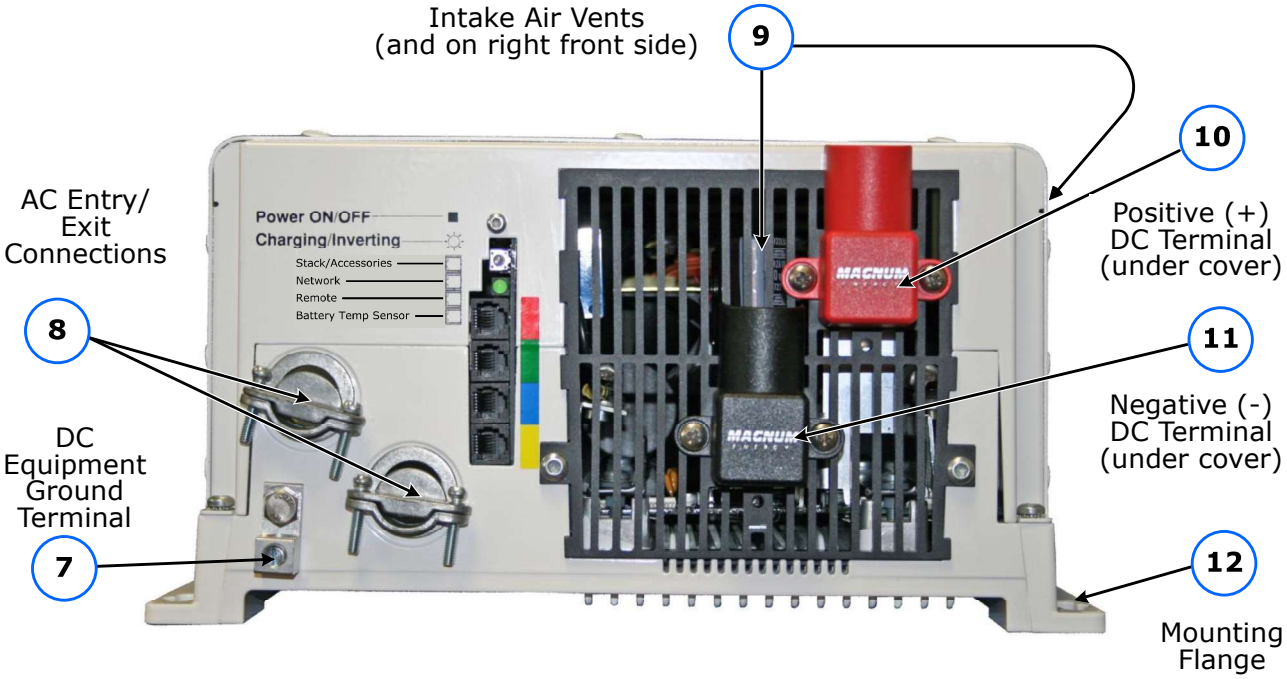

Figure 1-2, Electrical Connection Points

The left side of MS Series inverters are equipped with the following features (Figures 1-3 & 1-4):

13 **Exhaust Air Vents** – ventilation openings that allow heated air to be removed by the internal cooling fan.

14 **Model Number Label** – includes model number information and inverter and charger specifications. See the MS specifications in Appendix A for more information and a list of available models.

15 **AC Access Cover** – provides access to the internal AC wiring terminal block (Figure 2-10). This terminal block is used to hardwire all inverter AC input and output wiring connections. Remove the two screws to access the AC wiring terminal block.

Note: *The MS2000 models come with convenient AC pigtail wires instead of a terminal block.*

16 **Serial Number Label** – includes serial number information and date of manufacture.

17 **AC Input Circuit Breaker (CB1)** – this circuit breaker protects the unit's internal charger wiring and pass-thru relay while in Standby mode. The circuit breaker pops out when it opens—press in to reset. The input circuit breaker is not branch-rated, therefore branch-rated circuit breakers must be installed in the inverter's input wiring.

18 **AC Output Circuit Breakers (CB2 & CB3)** – these circuit breakers are branch-rated and are only available on models MS2000-15B, MS2000-20B, MS2012-20B, and MS4048-20B. They allow the inverter AC loads to be connected directly to the inverter's output without requiring an inverter sub-panel. These circuit breakers pop out when they open—press in to reset. They can also be manually pulled to disconnect the inverter's loads.

⚠CAUTION

Inverter models without the output circuit breakers (CB2 and CB3) must have branch-rated circuit breakers installed in the inverter's output wiring.

⚠CAUTION

The inverter's internal AC transfer relay is rated for 30 amps per leg. The pass-thru current must be no greater than 30 amps per leg or damage to the relays may occur.

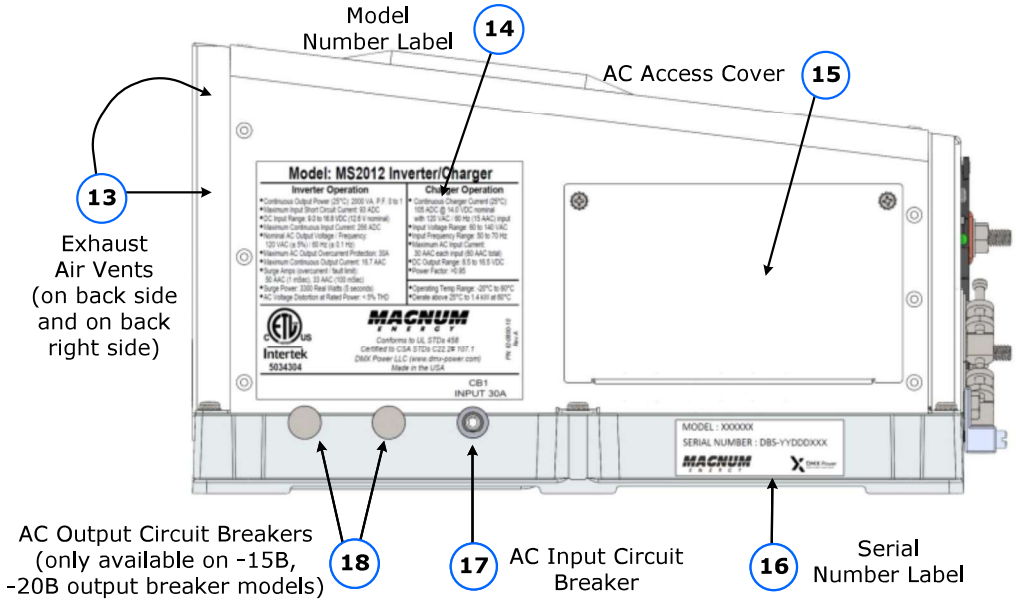

Figure 1-3, Left Side Features (MS2012, MS2812, MS2024, MS4024, MS4048)

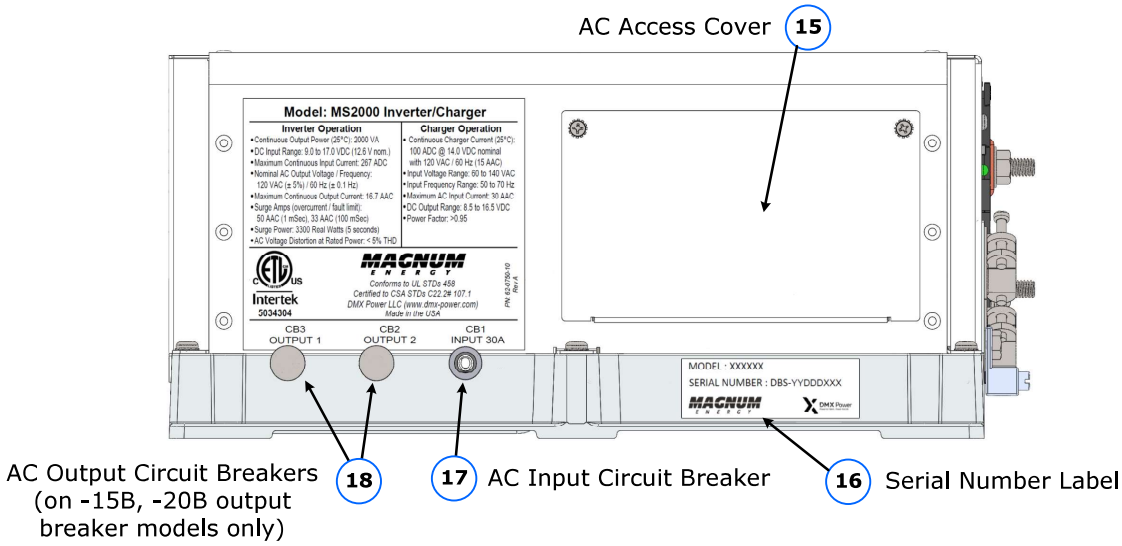

Note: *The model shown is not a -15B or -20B model, therefore it does not show any AC output breakers. Models without output breakers (CB2 & CB3) use carriage bolts to fill the breaker openings.*

Figure 1-4, Left Side Features (MS2000 Series)

2.0 Installation

WARNING

Installations should be performed by qualified personnel, such as a licensed or certified electrician. It is the installer's responsibility to determine which safety codes apply and to ensure that all applicable installation requirements are followed. Applicable installation codes vary depending on the specific location and application of the installation.

CAUTION

Review the "Important Product Safety Information" on pages ii-v before any installation.

CAUTION

The inverter is heavy. Use proper lifting techniques during installation to prevent personal injury.

The simplified system diagrams shown in Figures 2-1 & 2-2 should be reviewed to assist you in planning and designing your installation. These drawings are not intended to override or restrict any national or local electrical codes. The drawings should not be the determining factor as to whether the installation is compliant, that is the responsibility of the electrician and the on-site inspector.

2.1 Pre-Installation

Before proceeding, read the entire Installation section to determine how best to install your MS inverter/charger. The more thorough you plan in the beginning, the better your inverter needs will be met.

2.1.1 Unpacking and Inspection

Carefully remove the MS Series inverter/charger from its shipping container and inspect all contents. Verify the following items are included:

- The MS Series inverter/charger
- AC access cover with Phillips screws
- Red and black DC terminal covers with Phillips screws
- Two 5/16” Kep or Flange nuts (installed on the DC terminals)
- Warning label

If items appear to be missing or damaged, contact your authorized Magnum product dealer or DMX Power. If at all possible, keep your shipping box to help protect your inverter from damage if it ever needs to be returned for service. Save your proof-of-purchase as a record of your ownership; it will also be needed if the unit should require in-warranty service.

Record the unit’s model and serial number in a safe place in case you need to provide this information in the future. It is easier to record this information now, instead of after the unit has been installed.

2.1.2 Required Tools and Materials

Hardware/Materials

- Conduit, strain-reliefs and appropriate fittings
- Electrical tape
- 1/4” mounting bolts and lock washers
- Wire ties

Tools

- Miscellaneous screwdrivers
- Drill and drill bits
- Level
- Pliers
- Pencil or marker
- 1/2” wrench
- Wire strippers
- Multimeter

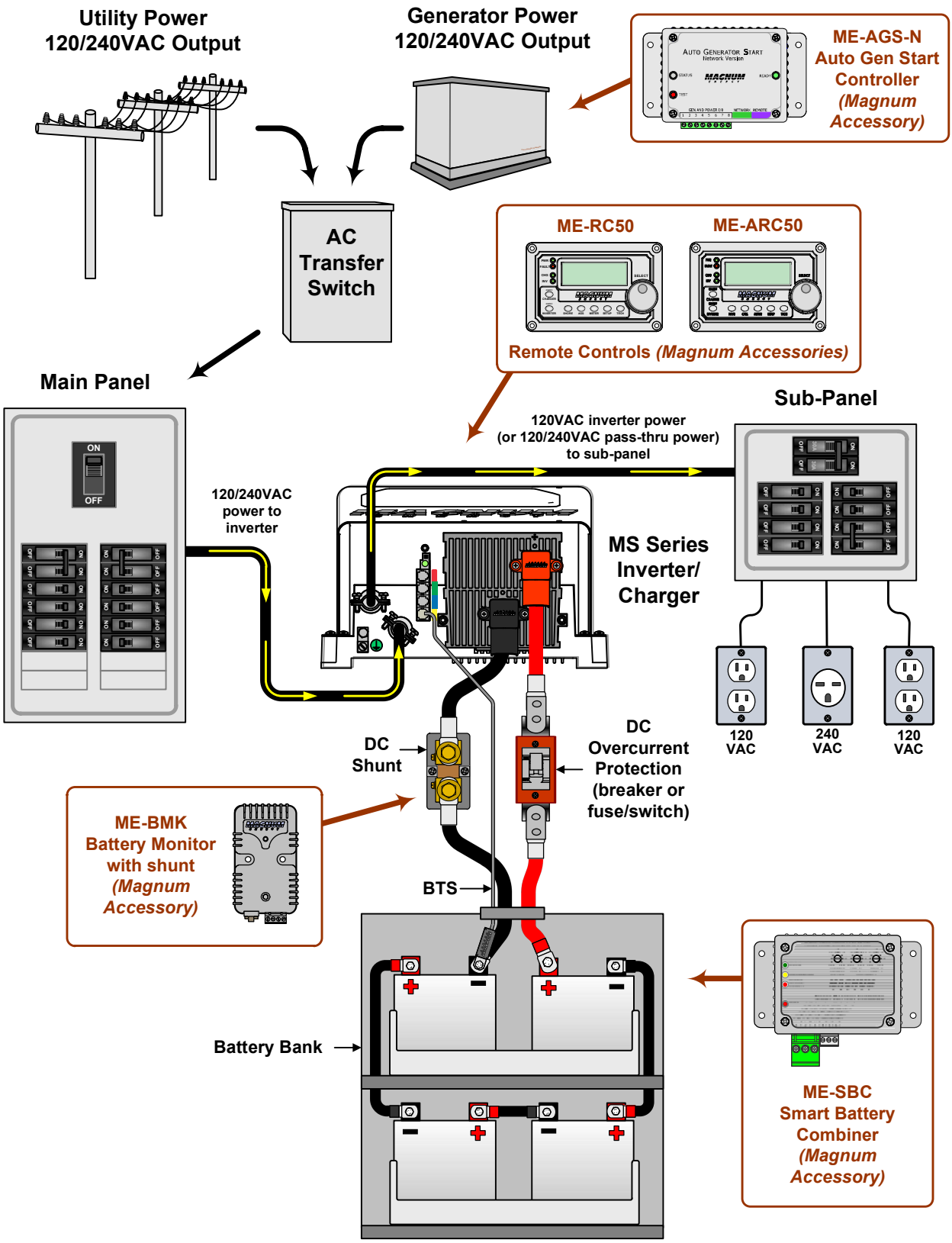

Figure 2-1, Simplified Installation for Permanent Installations (MS Series)

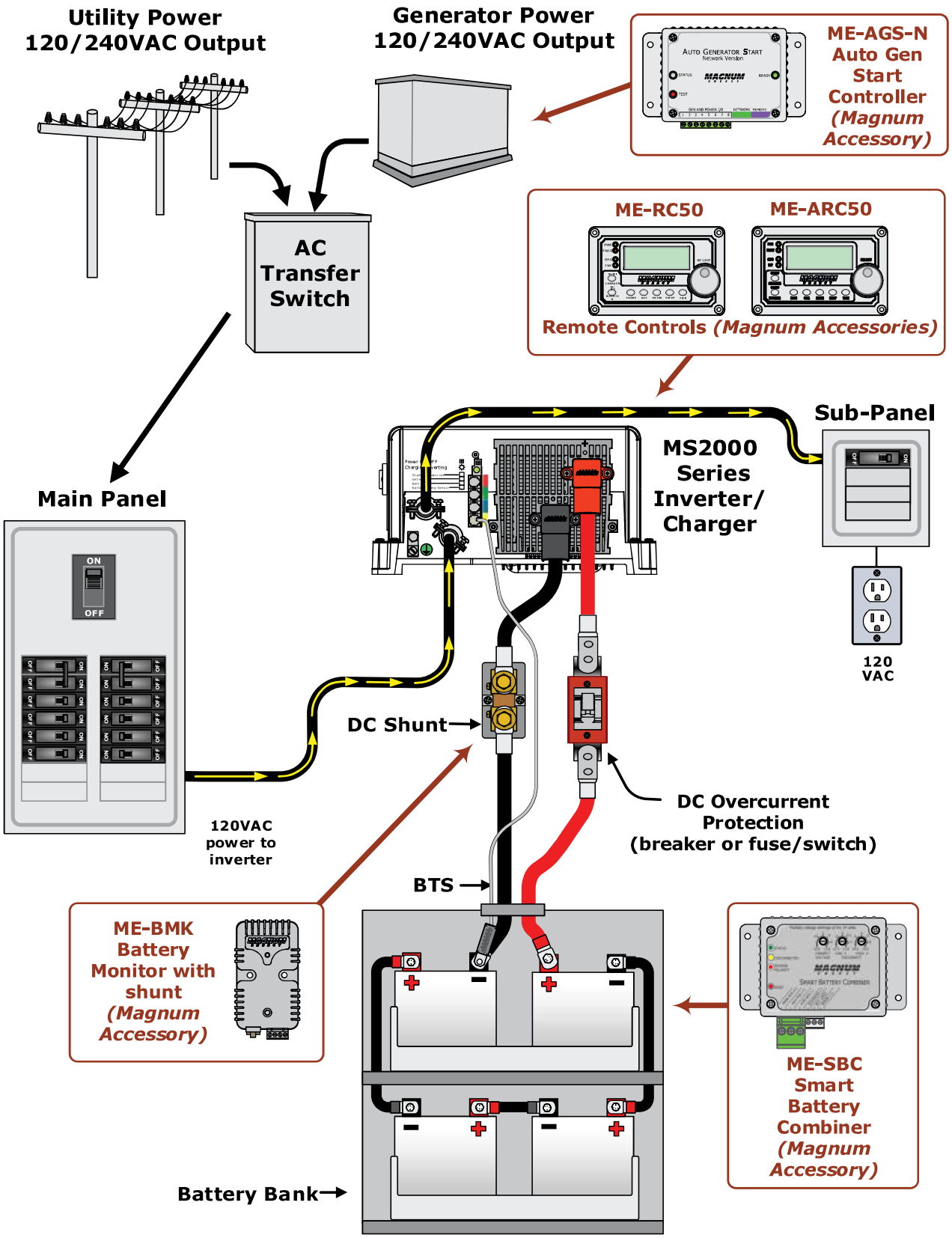

Figure 2-2, Simplified Installation for Permanent Installations (MS2000)

2.1.3 Locating the Inverter

Only install the inverter in a location that meets the following requirements:

Clean and Dry – The inverter should not be installed in an area that allows dust, fumes, insects, or rodents to enter or block the inverter's ventilation openings. This area also must be free from any risk of condensation, water, or any other liquid that can enter or fall on the inverter. The inverter is protected using stainless steel fasteners, plated copper busbars, a powder-coated aluminum base and conformal coated circuit boards—to help fight the harmful effects of corrosive environments. However, the inverter's service life may be affected if used in these type of environments. Inverter failure under these conditions is not covered under warranty.

NOTICE

If the inverter is installed in an area where moisture may occur, we recommend putting silicone dielectric grease compound into the electrical ports (Figure 1-1, Items 3-7). Before installing the cables, or if leaving any ports open, squirt a liberal amount into each port. Silicone dielectric compound makes an effective moisture and corrosive barrier to help protect and prevent corrosion to the RJ11 connections.

NOTICE

The ambient temperature around the inverter must not exceed 77°F (25°C) to meet power specifications.

Cool – The inverter should be protected from direct sun exposure or equipment that produces extreme heat.

Ventilation – In order for the inverter to provide full output power and to avoid over-temperature fault conditions, do not cover or block the inverter's ventilation openings or install this inverter in an area with limited airflow. The inverter uses two fans to provide forced air cooling, these fans pull in air through the intake vents (Figure 1-2, Item 9) and blow out air through the exhaust vents (Figure 1-3, Item 13). Allow at the minimum an airspace clearance of 6" (15.2 cm) at the intake and exhaust vents, and 3" (7.6 cm) everywhere else to provide adequate ventilation.

If installed in an enclosure, a fresh air intake opening must be provided directly to the front side (intake vents) of the inverter and an exhaust opening on the back side (exhaust vents) of the inverter. This allows cool air from the outside to flow into the inverter and heated air to exit the inverter and the enclosure. When mounted in an enclosed compartment, airflow must be ≥ 100 cfm in order to maintain no more than a 68°F (20°C) rise in compartment temperature.

⚠WARNING

Keep any flammable/combustible material (e.g., paper, cloth, plastic, etc.) that may be ignited by heat, sparks, or flames at a minimum distance of 2 feet (61 cm) away from the inverter.

⚠CAUTION

Do not mount this inverter in a zero clearance compartment, nor cover or obstruct the ventilation openings—overheating may result.

Close to the battery bank – The inverter should be located as close to the batteries as possible. Long DC wires lose efficiency and reduce the overall performance of an inverter. The unit should not be installed in the same compartment as the batteries or mounted where it will be exposed to gasses produced by the batteries.

⚠DANGER

Battery gases are corrosive and will damage the inverter; also, if these gases are not ventilated and allowed to collect, they could ignite and cause an explosion.

Accessible – Do not block access to the inverter's remote control and accessory ports or the inverter's controls and status indicator. Allow enough room to access the AC and DC wiring terminals and connections, as they need to be checked and tightened periodically. See Figures 2-3 and 2-4 for the MS Series inverter/charger's dimensions.

Away from sensitive electronic equipment – High powered inverters can generate levels of RFI (Radio Frequency Interference). Locate any electronic equipment susceptible to radio frequency and electromagnetic interference as far away from the inverter as possible.

2.2 Mounting the Inverter

The inverter base can reach a temperature up to 90°C (194°F) and should be mounted on a noncombustible surface*****. This surface and the mounting hardware must also be capable of supporting at least twice the weight of the inverter. To meet regulatory requirements, the MS Series must be mounted in one of the following positions as shown in Figure 2-3:

- above or under a horizontal surface (shelf or table),
- on a vertical surface (wall) with the DC terminals to the right,
- on a vertical surface (wall) with the DC terminals toward the bottom.

****** *Noncombustible surface – A surface made of material that will not ignite, burn, support combustion, or release flammable vapors when subjected to fire or heat as per the ASTM E136 standard. For the most part, these are materials that are largely comprised of inorganic materials such as stone, steel, iron, brick, tile, concrete, slate, and glass. Avoid common building materials such as gypsum board as well as any paint, wall coverings, and all types of wood.*

After determining the mounting position, refer to the physical dimensions as shown in Figures 2-4 or 2-5, or use the base of the inverter as a template to mark your mounting screw locations. After marking the mounting screw locations, mount the unit with appropriate mounting hardware.

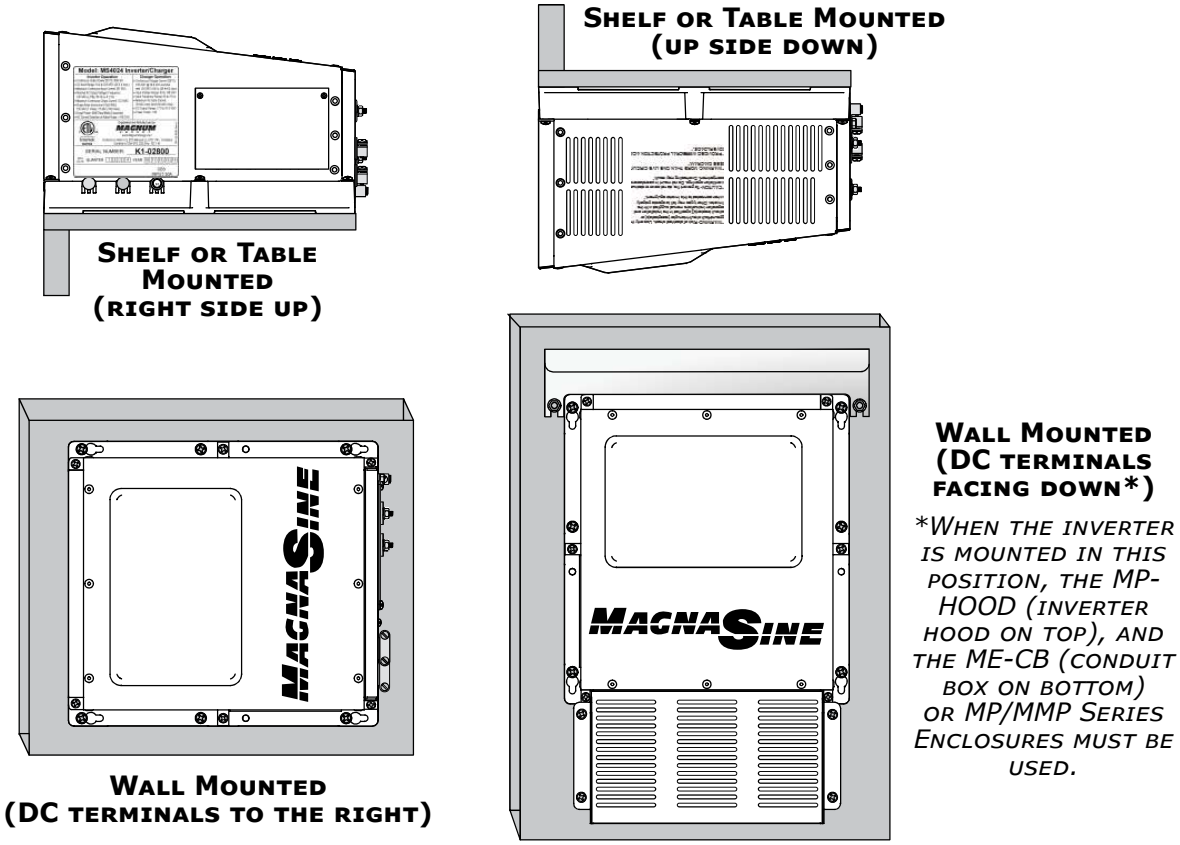

Figure 2-3, Approved Mounting Positions

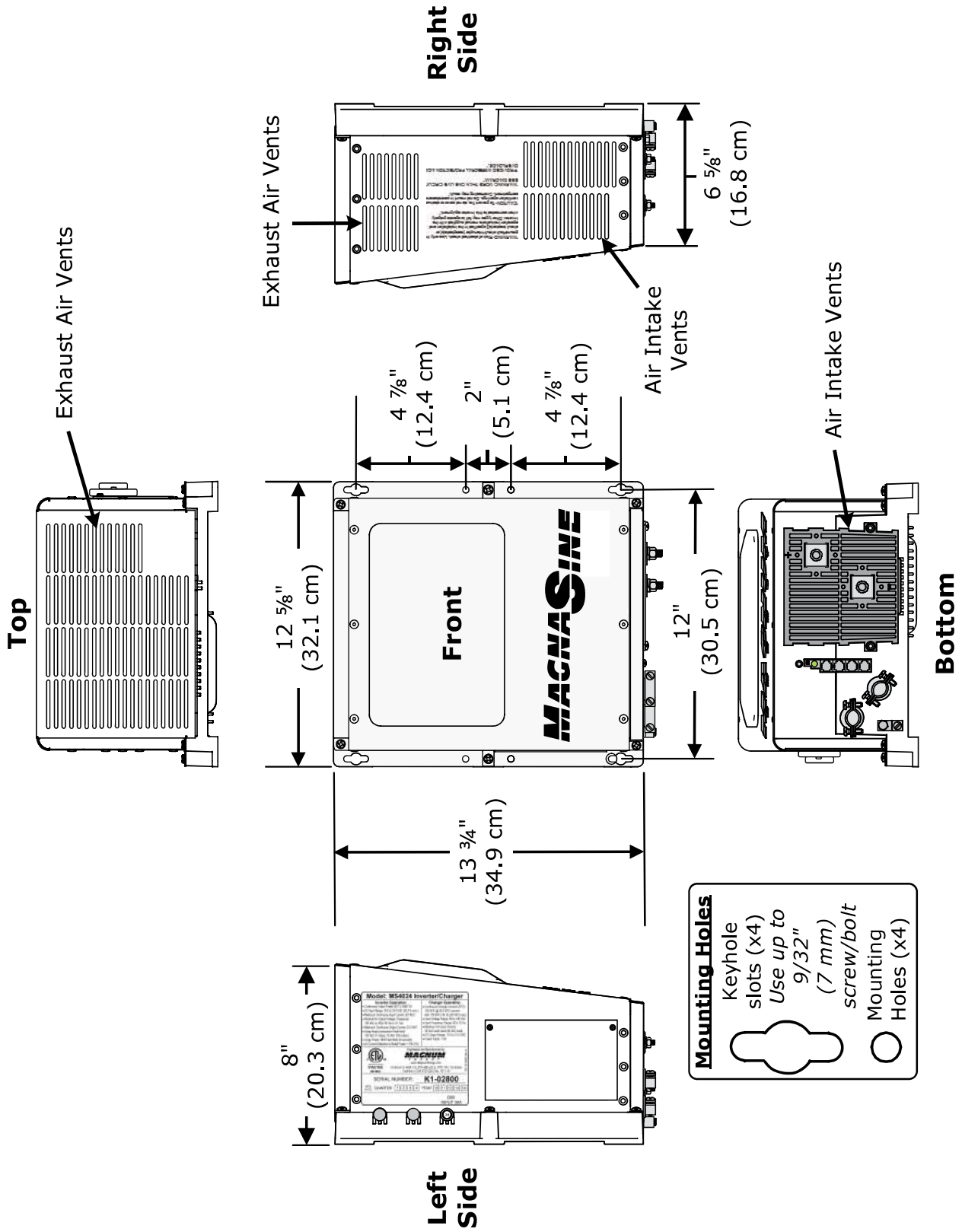

Figure 2-4, MS Dimensions (MS2012, MS2812, MS2024, MS4024, MS4048)

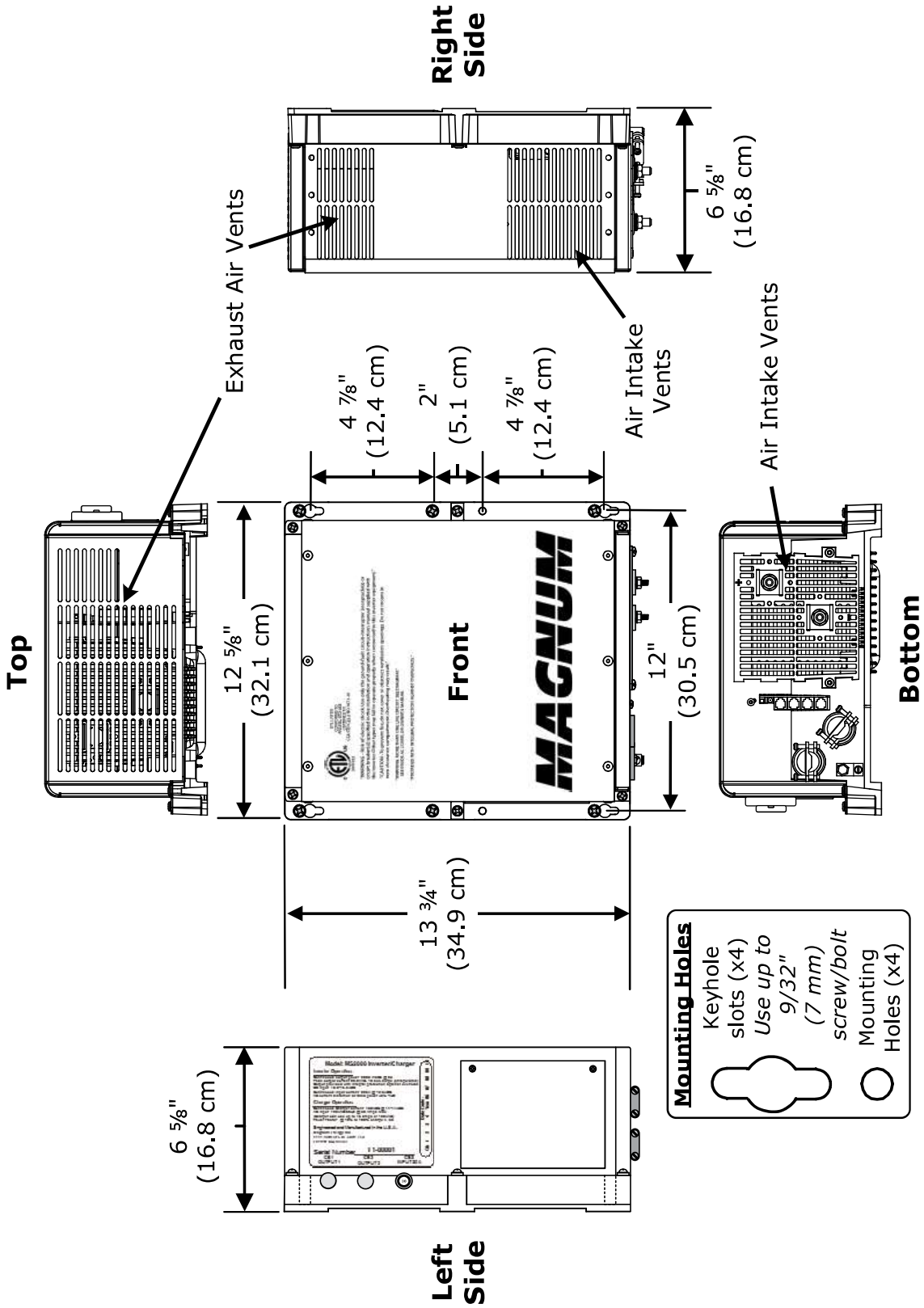

Figure 2-5, MS Dimensions (MS2000)

2.3 Wiring the Inverter – General Requirements

This section describes the requirements and recommendations for wiring the MS Series inverter/charger. Before wiring the MS Series inverter/charger, carefully read all instructions.

Wiring should meet all local codes and standards and be performed by qualified personnel such as a licensed electrician.

The NEC (National Electric Code, ANSI/NFPA 70) for the United States and the CEC (Canadian Electrical Code) for Canada provide the standards for safe wiring. The NEC/CEC lists requirements for wire sizes, overcurrent protection, and installation methods/standards.

Inverter/charger systems involve power from multiple sources (inverter, generator, utility, batteries, solar arrays, etc.) which make the wiring more hazardous and challenging.

The input and output AC and DC circuits are isolated from the inverter chassis. The inverter system grounding is the responsibility of the installer in accordance with the NEC/CEC and local codes.

WARNING

Ensure all sources of DC power (i.e., batteries, solar, wind, or hydro) and AC power (utility power or AC generator) are de-energized (i.e., breakers opened, fuses removed) before proceeding—to prevent accidental shock.

2.3.1 Protecting Wire – Conduit Box

The AC and DC wires to and from the inverter must be protected as required by code. This can be done by using jacketed wires or by feeding the wires through conduit.

NOTICE

Remove strain reliefs and replace with 3/4” grommets if using a conduit box or MMP/MP enclosure, and the AC wires are individual conductors (i.e., not jacketed).

2.3.2 Wiring Requirements

- All conductors must be protected by conduit, tape, or placed in a raceway.
- The conductor insulation must be of a type that is approved for the voltage, operating temperature, and location of use.
- Always check for existing electrical, plumbing, or other areas of potential damage prior to making cuts in structural surfaces or walls.
- Do not mix AC and DC wiring in the same conduit or panel unless specifically approved/designed for both AC and DC wiring. Where DC wiring must cross AC or vice-versa, try to make the wires at the crossing point perpendicular (90 degrees) to one another.
- Use only copper wires with a minimum temperature rating of 90°C (194°F).

CAUTION

Both AC and DC overcurrent protection must be provided as part of the installation.

CAUTION

The inverter requires a reliable negative and ground return path directly to the battery.

2.3.3 Wire Routing

Before connecting any wires, determine all wire routes to and from the inverter. Conductors passing through walls, bulkheads, etc., must be protected to minimize insulation damage, such as chafing. Typical routing scenarios are:

- AC input wiring from the main AC panel to the inverter
- AC input wiring from a generator (optional) to the inverter
- DC input wiring from the batteries to the inverter
- AC output wiring from the inverter to the AC sub-panel or to dedicated circuits
- Battery Temperature Sensor cable from the inverter to the batteries
- Remote control cable (optional) to the inverter
- AC and DC ground wiring to and from the inverter

2.3.4 Torque Requirements

Torque all AC wiring connections to 16 in-lbf (1.8 N-m). Torque DC cable connections from 10 to 12 ft lbf (13.6 to 16.3 N-m).

2.4 DC Wiring

This section describes the inverter's required DC wire sizes, the recommended disconnect/ overcurrent protection, and how to make the DC connections to the inverter and the battery bank. Refer to Figure 2-6 when connecting the DC wires.

WARNING

Even though DC voltage is "low voltage", significant hazards may be present, particularly from short circuits of the battery system.

CAUTION

The inverter is NOT reverse polarity protected—which means that if the negative and positive battery voltage is connected backwards to the inverter, the inverter will likely be damaged. You should verify the correct voltage polarity using a voltmeter BEFORE connecting the DC wires. Color code the the DC cables/wires with colored tape or heat shrink tubing: RED for positive (+), WHITE for negative (–), and GREEN (or bare copper) for DC ground, to avoid polarity problems.

CAUTION

To remove battery power from the inverter, disconnect the battery positive connection before the negative connection. This requirement can prevent damage to the inverter and/or an accessory connected to the inverter.

Note: *When an accessory that is not powered by the inverter (e.g., ME-AGS-N and ME-BMK) is installed and connected to the inverter (via a network communication cable), the battery negative connection of the inverter and each accessory must be at the same potential (i.e., electrically common with each other) until the positive connection of each device is removed. This prevents a high impedance path developing between the connected devices (i.e., inverter and accessories), which can cause the network cable to become the DC return path to the battery—possibly resulting in permanent damage to all connected devices on the network. This can be prevented if the battery negative connection of each device is always connected before connecting/disconnecting any battery positive.*

CAUTION

Before wiring the DC cables, review the safety information at the beginning of this manual and the information below to ensure a safe and long-lived system.

- When the inverter is installed in a photovoltaic system, the NEC requires that the DC circuit conductors and overcurrent devices to the inverter be sized to carry not less than 125% of the inverter's maximum current rating.
- The DC positive and negative cables connected to the inverter from the battery bank should be tied together with wire ties or electrical tape approximately every 6 inches (15.2 cm). This helps improve the surge capability and reduces the effects of inductance, which improves the inverter waveform and reduces the wear of the inverter's filter capacitors.
- Crimped and sealed copper ring terminal lugs with a 5/16" hole should be used to connect the DC wires to the inverter's DC terminals.
- The battery bank voltage MUST match the DC voltage required by the inverter (i.e., 24-volt battery bank for a 24-volt inverter) or the inverter may be damaged.
- To ensure the maximum performance from the inverter, all connections from the battery bank to the inverter should be minimized. The exception is the DC overcurrent disconnect in the positive line and a shunt in the negative line. Any other additional connection will contribute to additional voltage drops, and these extra connection points may loosen during use.

NOTICE

All wiring to the battery terminals should be checked once a month for proper tightness. The torque requirement for the DC terminals is between 10 to 12 ft lbf (13.6 to 16.3 N-m). If you do not have a torque wrench, ensure all DC terminals are tight and cannot move. Be aware that overtightening or misthreading the nuts on the DC terminals can cause the bolts to strip and break off.

NOTICE

A brief spark or arc may occur when connecting the battery cables to the inverter DC terminalsl; this is normal and due to the inverter's internal capacitors being charged.

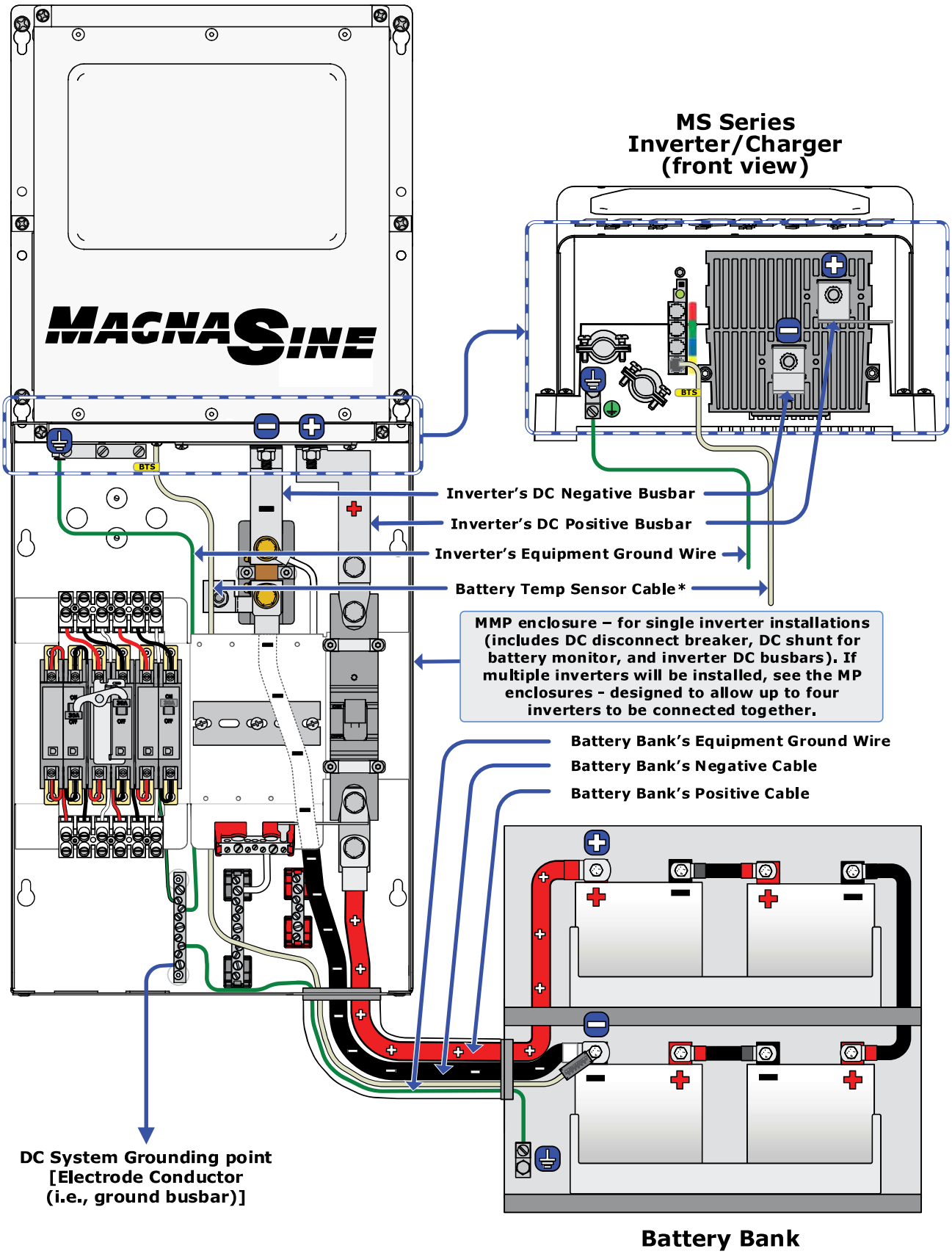

Figure 2-6, DC and Battery Temperature Sensor Wiring

2.4.1 DC Wire Sizing

It is important to use the correct sized DC wire to achieve maximum efficiency from the system and to reduce fire hazards associated with overheating. Always keep your wire runs as short as practical to prevent low voltage shutdowns and to keep the DC breaker from nuisance tripping (or open fuses) because of increased current draw. See Table 2-1 to select the minimum DC wire size (and corresponding overcurrent device) required based on your inverter model. The cable sizes listed in Table 2-1 are required in order to reduce stress on the inverter, minimize voltage drops, increase system efficiency, and ensure the inverter's ability to surge heavy loads.

If the distance from the inverter to the battery bank is >5 feet (1.5 cm), the DC wire needs to be increased. Longer distances cause an increase in resistance, which affects the performance of the inverter. Use the overcurrent device previously determined from Table 2-1 and then refer to Table 2-2 to determine the minimum DC wire size needed for various distances.

Table 2-1, Recommended DC Wire/Overcurrent Device for Rated Use

Inverter Model	Maximum Continuous Current[1]	Using Conduit		In Free Air		DC Grounding Electrode Wire Size[4]
		Minimum DC Wire Size [rating][2]	Recommended DC Breaker Size	Minimum DC Wire Size [rating][2]	Maximum DC Fuse Size[3]	
MS2000/ MS2012	267 amps	#4/0 AWG (107.2 mm²) [260 amps]	250 amps[5]	#2/0 AWG (67.4 mm²) [300 amps]	300 amps with time delay	#6 AWG (13.3 mm²)
MS2812	373 amps	#4/0 AWG (107.2 mm²) [260 amps]	250 amps[5]	#4/0 AWG (107.2 mm²) [405 amps]	400 amps with time delay	#6 AWG (13.3 mm²)
MS2024	133 amps	#1 AWG (42.4 mm²) [150 amps]	150 amps	#4 AWG (107.2 mm²) [140 amps]	150 amps[3] with time delay	#6 AWG (13.3 mm²)
MS4024	267 amps	#4/0 AWG (107.2 mm²) [260 amps]	250 amps[5]	#2/0 AWG (67.4 mm²) [300 amps]	300 amps with time delay	#6 AWG (13.3 mm²)
MS4048	133 amps	#1 AWG (42.4 mm²) [150 amps]	150 amps	#4 AWG (107.2 mm²) [140 amps]	150 amps[3] with time delay	#6 AWG (13.3 mm²)

Note[1] *– Maximum continuous current is based on the inverter's continuous power rating at the lowest input voltage with an inverter inefficiency factored in.*
Note[2] *– Copper wire rated with 90°C (194°F) insulation at an ambient temperature of 30°C (86°F), with a multiple cable fill factor (0.8) de-rating (if needed).*
Note[3] *– The next larger standard size overcurrent device may be used if the derated cable ampacity falls between the standard overcurrent devices found in the NEC.*
Note[4] *– Per NEC, the DC grounding electrode conductor can be a #6 AWG conductor if that is the only connection to the grounding electrode and that grounding electrode is a rod, pipe, or plate electrode.*
Note[5] *– May not allow continuous operation at full rated power as defined by the NEC.*

2.4.2 DC Overcurrent Protection

DC overcurrent protection is not included in the inverter—for safety reasons and to comply with electrical code regulations—it must be provided as part of the installation. The DC overcurrent protection device must be installed in the positive DC cable line, it can be a fuse or a circuit breaker and must be DC rated. It must be correctly sized according to the size of DC cables being used, which means it is required to open before the cable reaches its maximum current carrying capability, thereby preventing a fire. In a residential or commercial electrical installation, the NEC requires both overcurrent protection and a disconnect switch. If a circuit breaker is used as the overcurrent protection device, it can also be used as the required DC disconnect.

If a fuse is used as an overcurrent device, a Class-T type or equivalent is recommended. This fuse type is rated for DC operation, can handle high short-circuit currents, and has a time delay that allows for momentary current surges from the inverter without opening the fuse. However, because the fuse can be energized from both directions, the NEC requires that it be installed in a manner that the power must be disconnected on both ends of the fuse before servicing.

Use Table 2-1 to select the DC overcurrent device needed based on the recommended minimum wire size for your particular inverter model (may not meet all local code or NEC requirements).

Table 2-2, DC Wire Size For Increased Distance

Inverter Model	Minimum Recommended DC Wire Size (one way)*					
	5 feet or less (1.5 m or less)		5 to 10 feet (1.5 m to 3.0 m)		10 to 15 feet (3.0 m to 4.6 m)	
	In Conduit	In Free Air	In Conduit	In Free Air	In Conduit	In Free Air
MS2000	#4/0 AWG (107.2 mm²)	#2/0 AWG (67.4 mm²)	#4/0 AWG x2 (107.2 mm²)	#4/0 AWG (107.2 mm²)	not recommended	#4/0 AWG x2 (107.2 mm²)
MS2012	#4/0 AWG (107.2 mm²)	#2/0 AWG (67.4 mm²)	#4/0 AWG x2 (107.2 mm²)	#4/0 AWG (107.2 mm²)	not recommended	#4/0 AWG x2 (107.2 mm²)
MS2812	#4/0 AWG (107.2 mm²)	#4/0 AWG (107.2 mm²)	#4/0 AWG x2 (107.2 mm²)	#4/0 AWG x2 (107.2 mm²)	not recommended	not recommended
MS2024	#1 AWG (42.4 mm²)	#4 AWG (21.1 mm²)	#1/0 AWG (53.5 mm²)	#2 AWG (33.6 mm²)	#2/0 AWG (67.4 mm²)	#1/0 AWG (53.5 mm²)
MS4024	#4/0 AWG (107.2 mm²)	#2/0 AWG (67.4 mm²)	#4/0 AWG x2 (107.2 mm²)	#4/0 AWG (107.2 mm²)	not recommended	#4/0 AWG x2 (107.2 mm²)
MS4048	#1 AWG (42.4 mm²)	#4 AWG (21.1 mm²)	#1/0 AWG (53.5 mm²)	#2 AWG (33.6 mm²)	#2/0 AWG (67.4 mm²)	#1/0 AWG (53.5 mm²)

** Copper wire rated with 90°C (194°F) insulation at an ambient temperature of 30°C (86°F).*

2.4.3 DC Cable Connections

Do not put anything between the battery cable ring lug and the battery post or the flat metal part of the inverter's DC terminal. When connecting the battery cable to the battery post or inverter DC terminal, the cable should be placed directly against the inverter terminal or battery post. Incorrectly installed hardware causes a high resistance connection which could lead to poor inverter/charger performance, and may melt the cable and terminal connections.

⚠CAUTION

The DC terminal and Flange/Kep nuts are made of stainless steel which have a high likelihood of seizure. To help prevent the bolt and nut from seizing—causing the bolts to strip or snap/break-off—the use of anti-seize lubricant is highly recommended.

NOTICE

If antioxidant grease or spray is used, apply it after all the connections have been made and are properly tightened. A 1/2-inch wrench or socket is used to tighten the 5/16 SAE Flange/Kep nuts.

Refer to Figures 2-7 and 2-8 on the next page to connect the DC cables and to stack the hardware correctly. Tighten the terminal connections from 10 to 12 ft lbf (13.6 to 16.3 N-m).

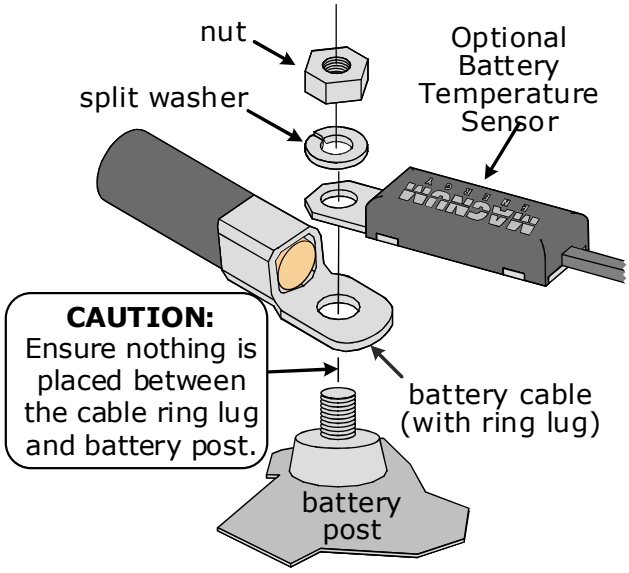

Figure 2-7, Battery Hardware Installation

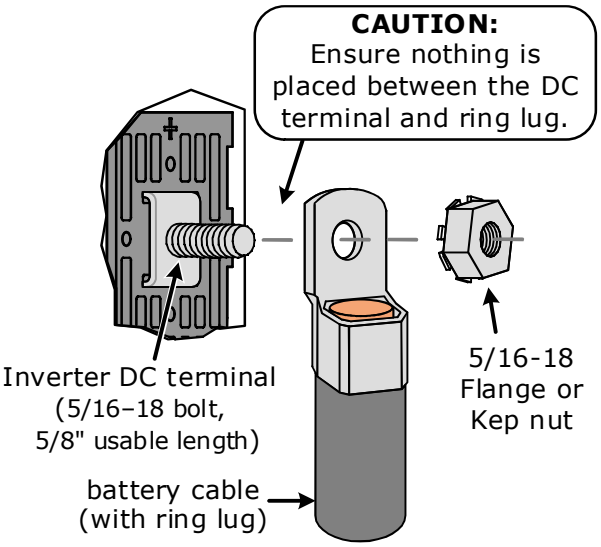

Figure 2-8, Inverter DC Hardware Installation

2.4.4 Wiring the Battery Bank

DANGER

Lethal currents will be present if the positive and negative cables attached to the battery bank touch each other. During the installation and wiring process, ensure the cable ends are insulated or covered to prevent touching/shorting the cables.

CAUTION

DO NOT connect the DC wires from the battery bank to the inverter until
1) All DC and AC wiring is complete
2) The correct DC and AC overcurrent protection has been installed
3) The correct DC voltage and polarity have been verified.

NOTICE

For the MS Series inverter/charger to perform optimally, a minimum battery bank of 200 AH is recommended for moderate loads (<1000W) and greater than 400 AH for heavy loads (≥1000W).

Depending upon the voltage of the batteries you use in the installation (6 or 12 VDC), the batteries must be wired in series, parallel, or series-parallel to provide the correct voltage (see Appendix B – Battery Information for guidance on wiring batteries together). The interconnecting DC wires must be sized and rated exactly the same as those used between the battery bank and the inverter.

Place the batteries as close as practical to the inverter, preferably in an insulated and ventilated enclosure. Allow adequate space above the batteries to access the terminals and vent caps (as applicable). Also, allow at least 1" (2.5 cm) of space between the batteries to provide good air flow.

WARNING

DO NOT mount the batteries directly under the inverter.

WARNING

Install batteries in a well ventilated area. Batteries can produce explosive gasses. For compartment or enclosure installations, always vent batteries to the outside.

NOTICE

To ensure the best performance from your inverter system, batteries should be of the same size, type, rating, and age. Do not use old or untested batteries.

2.4.5 Optional Battery Temperature Sensor Installation and Wiring

The Battery Temperature Sensor (shown in Figure 2-9) provides the inverter with precise battery temperature information to automatically adjust the ABSORB and FLOAT charge voltage set-points. This allows the batteries to be correctly charged under extreme temperature changes.

The BTS cable may be extended—using a RJ11 connector (female to female) and a standard phone cable with RJ11 connectors—to a maximum length of 40 feet (12 m). However, your inverter to battery cable length should not exceed the recommended distance provided in Table 2-2.

To install the BTS:

1. Attach the ring terminal end of the Battery Temperature Sensor to the negative battery terminal; see Figure 2-7 for proper connection to the battery terminal.
2. Route the sensor's cable to the inverter following existing wire runs.
3. Connect the RJ11 connector end of the BTS cable to the yellow-labeled BTS port on the inverter (Figure 1-1, Item 6).

NOTICE

If the temperature sensor is NOT installed and the batteries are subjected to large temperature changes, the battery life may be shortened.

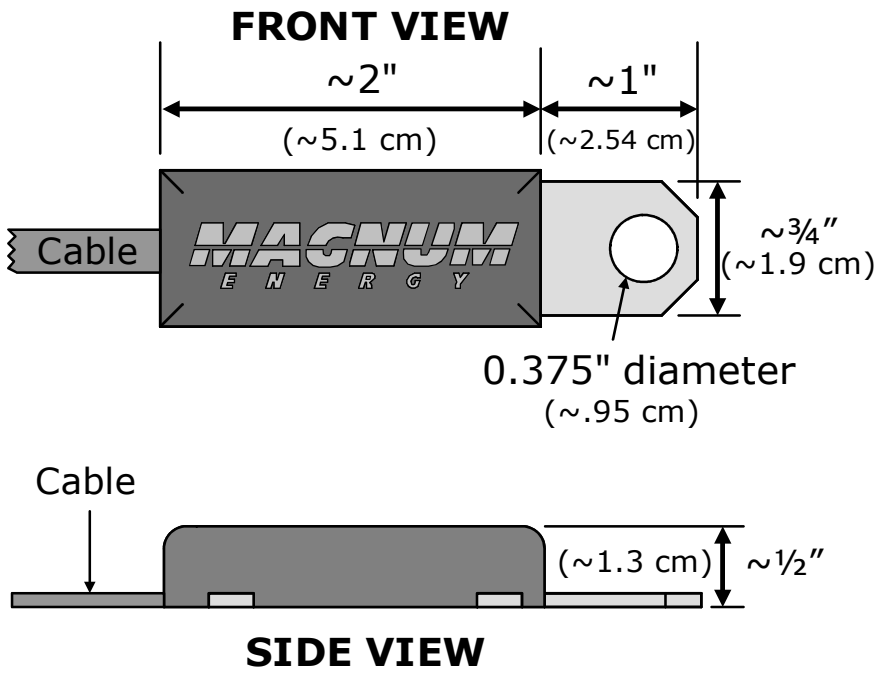

Figure 2-9, Battery Temperature Sensor

2.4.6 Wiring the Inverter to the Battery Bank

CAUTION

The inverter is NOT reverse polarity protected—if this happens the inverter will be damaged and will not be covered under warranty. Before connecting the DC wires from the batteries to the inverter, verify the correct battery voltage and polarity using a voltmeter. If the positive terminal of the battery is connected to the negative terminal of the inverter and vice versa, severe damage will result. If necessary, color code the cables (with colored tape): RED for positive (+), and WHITE for negative (–) to avoid polarity confusion.

NOTICE

The DC overcurrent device (i.e., circuit breaker or fuse) must be placed in the positive (red) DC cable line between the inverter's positive DC terminal and the battery's positive terminal (red)—as close to the battery as possible.

DC Ground Wire

1. Route an appropriately sized DC grounding wire (GREEN or bare wire) from the inverter's DC equipment ground terminal (Figure 1-2, Item 7) to a dedicated system ground. Recommended tightening torque is 45 in-lbf (5.1 N-m). Refer to Section 2.6 for grounding information and sizing the DC ground wires.

DC Negative Wire

2. Route an appropriately sized DC negative wire (WHITE) from the negative terminal of the battery bank to the inverter's negative terminal (Figure 1-2, Item 12).

NOTICE

If installing a battery monitor such as DMX Power's ME-BMK, install a DC shunt in-line with the negative battery cable.

DC Positive Wire

3. Mount the circuit breaker or fuse assembly as near as practical to the batteries and leave open (i.e., no power to inverter).

⚠WARNING

DO NOT close the DC circuit breaker or connect the fuse to connect battery power to the inverter at this time. This will occur in the **Functional Test** after the installation is complete.

NOTICE

If connecting live battery cables to the inverter DC terminals, a brief spark or arc may occur; this is normal and due to the inverter's internal capacitors being charged.

4. Route and connect an appropriately sized DC positive wire (RED) from the inverter's positive DC terminal (Figure 1-2, Item 10) to one end of circuit breaker (or DC fuse block).
5. Connect a short wire (same rating as the DC wires) to the other side of the DC circuit breaker (or one end of the fuse/disconnect assembly) and the other end of the short wire to the positive terminal of the battery bank (see Figures 2-1 & 2-2 for reference). This is essential to ensure even charging and discharging across the entire battery bank.
6. Ensure the DC wire connections (on the batteries, inverter, and DC circuit breaker/fuse lugs) are flush on the surface of the DC terminals, and the hardware (lock washer and nut) used to hold these connections are stacked correctly (see Figures 2-7 & 2-8). Verify all DC connections are torqued from 10 to 12 ft lbf (13.6 to 16.3 N-m).
7. Once the DC connections are completely wired and tested, coat the terminals with an approved anti-oxidizing spray.
8. Attach the red and black terminal covers over the inverter's DC connectors, and then secure them in place with the supplied screws.
9. If the batteries are in an enclosure, perform a final check of the connections to the battery terminals, then close and secure the battery enclosure.

2.5 AC Wiring

This section provides information on how to make the AC connections to the inverter using the correct AC wire size and corresponding overcurrent protection. See Figures 2-11 through 2-17.

2.5.1 Pre-AC Wiring Requirements

CAUTION

Before installing any AC wiring, review the safety information at the beginning of this manual and the following to ensure a safe and long-lived system:

- Always use properly rated circuit breakers. If using an electrical sub-panel, circuit breakers can be moved from the main electrical panel to the sub-panel only if the breakers are also listed to be installed in the sub-panel.
- AC wiring must be no less than #10 AWG (5.3 mm^2) gauge copper wire and be approved for the application (i.e., residential, RV, or marine wiring).
- DO NOT connect the inverter's output to an AC power source. This could cause severe damage to the inverter and is not covered under warranty.
- The wire sizes recommended in this manual are based on the ampacities given in Table 310.16 (in conduit) or Table 310.17 (in free air) of the National Electrical Code. ANSI/NFPA 70, for 90°C (194°F) copper wire based on an ambient temperature of 30°C (86°F).

WARNING

To reduce the risk of fire, do not connect this inverter to an AC load center (circuit breaker panel) having multi-wire branch circuits connected.

2.5.2 AC Wire Size and Overcurrent Protection

The AC input and output wiring must be sized per the local electrical safety code requirements to ensure the wire's ability to safely handle the inverter's maximum load current. The AC wiring must be protected from short circuits and overloads by an overcurrent protection device and have a means to disconnect the AC circuits. AC overcurrent protection is not included in the inverter and must be provided as part of the inverter installation. The AC overcurrent protection device must be a circuit breaker or a fuse/disconnect and be properly sized and branch circuit rated for the wire it is protecting and the appliances being powered.

NOTICE

When wiring the AC input and output circuits, we highly recommend a full system Inverter Bypass Switch. This simple item provides a convenient way to isolate the inverter for battery maintenance, and it could save you hours of downtime—if you ever need to service your inverter—by enabling you to continue to power your AC loads without any re-wiring. Because we think it is an essential part of an inverter system, every panel (MMP/MP Series) is equipped with an Inverter Bypass Switch.

When in Standby mode, the full AC continuous pass-thru capacity of the MS Series inverter/charger is 30 amps for each AC leg[1] (AC HOT 1 IN & AC HOT 2 IN). For a 30-amp continuous pass-thru capability, each AC HOT input to the inverter requires a 30-amp continuous duty rated breaker[2], which corresponds to a minimum cable size of #10 AWG/5.3 mm^2 (in conduit). However, the AC HOT 1 IN & AC HOT 2 IN may be combined to obtain a 60-amp pass-thru capability[2] (see Figure 2-12). When tying the AC HOT 1 IN & HOT 2 IN together for a 60-amp continuous pass-thru capability, the AC input to the inverter requires a 60-amp continuous duty rated breaker, which corresponds to a minimum cable size of #6 AWG/13.3 mm^2 (in conduit). If you are using other circuit breakers/wire sizes, refer to the appropriate electrical codes for sizing requirements.

CAUTION

The inverter's internal AC transfer relay contacts are rated for 30 amps (each leg), the pass-thru current for relay contact must be no greater than 30 amps or damage to this relay may occur.

Note[1] *– On -15B and -20B models, the pass-thru current is limited by the inverter's output breaker size.*
Note[2] *– The -15B/-20B models have a single AC input—cannot be configured for a 60-amp pass-thru capability.*

2.5.3 Recommended GFCI (Ground Fault Circuit Interruption) Outlets

In compliance with UL standards, DMX Power tested the following series of GFCIs and found that they function properly when connected to the inverter's AC output:

- Leviton 8899-A, N7899, GFNT1, or GNNT2

WARNING

Risk of electrical shock. Use only ground-fault circuit interrupters [receptacle(s) or circuit breaker(s)] compatible with your MS inverter/charger.

CAUTION

Ground Fault Circuit Interrupters (GFCIs) shall be installed in the RV wiring system to protect all branch circuits.

2.5.4 AC Terminal Connections (MS2012, MS2812, MS2024, MS4024, & MS4048)

These models have a six-pole AC terminal block and one AC ground terminal to connect the inverter's AC input and output wiring. This terminal block (Figure 2-10) allows a service/distribution panel (main panel) to be wired to the inverter's input, and also allows a dedicated panel (sub-panel) between the inverter's output wiring and the AC loads. To access and view the AC terminal block and ground terminal, remove the two Phillips screws holding the AC wiring access cover plate (see Figure 1-3, Item 15). Each connection on the AC terminal block is rated to accept one #14 to #6 AWG (2.1 to 13.3 mm^2) CU stranded wire, or two #12 AWG (3.3 mm^2) CU stranded wires. Each connection uses a M3.5 slotted head screw, and the maximum tightening torque is 16 lbf-in (1.8 N-m).

NOTICE

Figure 2-12 [SI/SO (60A)] uses a #6 AWG (13.3 mm^2) CU wire to carry 60 amps, and splits to two wires to allow 30 amps for each leg (i.e., AC HOT 1 IN and AC HOT 2 IN). IDEAL Industries Inc. (www.idealindustries.com) manufactures a crimp connector (PN: 412) and a separate insulator (PN: 417) that allow up to two #8 AWG (8.4 mm^2) wires—with one #6 AWG (13.3 mm^2) wire to be connected together.

NOTICE

To comply with ABYC requirements for marine installations, the AC terminal has a stainless steel wire protector to prevent wire damage from the set-screw.

NOTICE

The inverter's NEUT IN and NEUT OUT terminals are electrically isolated from each other while inverting. If the input and output neutrals must be connected together, the inverter's neutral-to-ground connection must be disconnected (see Section 2.6.6).

The AC ground terminal can accept one #14 to #6 AWG (2.1 to 13 mm^2) CU stranded wire. It uses a slotted head screw and has a recommended maximum tightening torque of 45 in-lbf (5.1 N-m). For multiple ground wires, use a pressure or mechanical connector to attach the single wire from the AC ground terminal to the input and output ground connections.

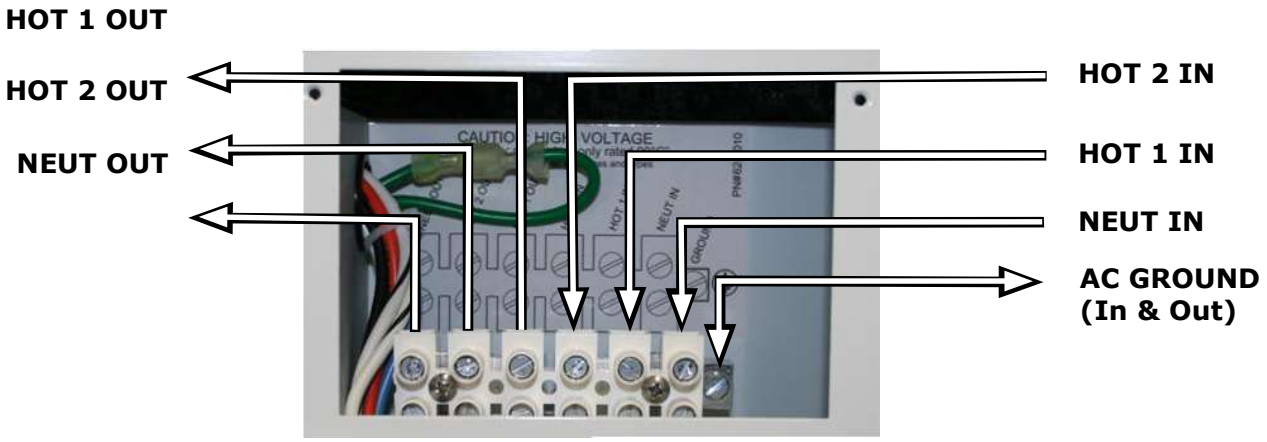

Figure 2-10, AC Terminal Block

2.5.5 AC Conductor Wiring (MS2012, MS2812, MS2024, MS4024, & MS4048)

The following steps are basic guidelines for installing and connecting the AC wiring to and from all MS Series inverters (except MS2000 Series model inverters—for instructions on wiring MS2000 Series model inverters, refer to Section 2.5.7). Before proceeding, refer to Table 2-3 to determine your AC wiring configurations.

WARNING

Before making any AC connections, make sure the inverter is disconnected from the battery and no AC power is connected to the inverter.

Wiring the Inverter AC Input

1. Remove the two Phillips screws on the AC wiring access cover (Figure 1-3, Item 15) to access the internal AC terminal block (see Figure 2-10).
2. Route the wires (hot, neutral, and ground) from the AC electrical main panel through one of the strain relief clamps on the inverter (Figure 1-2, Item 8). Tighten the strain relief clamp securely on the wires. Always leave a little extra slack in the wiring.
3. Connect the hot wire (BLACK) from the main panel's dedicated breaker to the inverter's HOT 1 IN terminal. Tighten the HOT 1 IN terminal to 16 in-lbf (1.8 N-m).

NOTICE

You must connect to the HOT 1 IN terminal if you want to use the battery charger.

NOTICE

Depending on the AC wiring configuration, you may need to connect a wire to the HOT 2 IN terminal—refer to your configuration drawing (Figure 2-12 to 2-15).

4. Connect the neutral (WHITE) from the main panel's neutral busbar to the inverter's NEUT IN terminal. Tighten the NEUT IN terminal to 16 in-lbf (1.8 N-m).

Wiring the Inverter AC Output

5. Route the wires (hot, neutral, and ground) through the unused strain relief clamp on the inverter (Figure 1-2, Item 8) to the AC electrical sub-panel (or outlets, if using the output breaker versions). Tighten the strain relief clamp securely on the wires.
6. Connect the hot (BLACK) wire from the inverter's AC HOT 1 OUT terminal to the sub-panel's main breaker (or to the hot connections on the outlets if using the output breaker versions). Tighten the AC HOT 1 OUT terminal to 16 in-lbf (1.8 N-m).

NOTICE

Depending on the AC wiring configuration, you may need to connect a wire to the AC HOT 2 OUT terminal—refer to your configuration drawing (Figure 2-12 to 2-15).

7. Connect the neutral (WHITE) from the inverter's NEUT OUT terminal to the sub-panel's neutral busbar (or to the neutral connection on the outlets if using the output breaker versions). Tighten the NEUT OUT terminal to 16 in-lbf (1.8 N-m).

Wiring the Inverter AC Ground

8. Combine the ground (GREEN) wire from the main panel's ground busbar and the ground (GREEN) wire from the sub-panel's ground busbar (or the ground connection on the outlets if using the output breaker versions). After these grounds are combined, connect them to the inverter's AC GROUND terminal. Tighten the AC GROUND terminal to 16 in-lbf (1.8 N-m).

AC Wiring Inspection

9. Verify all wire runs are secured. If installed in a mobile installation, use wire ties or other non-conductive fasteners to prevent chafing or damage from movement and vibration.
10. Verify strain reliefs or grommets are in place to prevent damage to the wiring or conduit where it passes through walls/bulkheads or other openings.
11. After verifying all AC connections are correct and all inverter AC terminal screws are torqued to 16 in-lbf (1.8 N-m), replace the AC wiring access cover and the covers on the main electrical/ distribution panel.

2.5.6 AC Wiring Configurations (MS2012, MS2812, MS2024, MS4024, & MS4048)

The following table provides the different wiring configurations for installing and connecting the AC conductors to and from the inverter (refer to Figures 2-11 to 2-15 for installation drawings showing these configurations). Refer to Table 2-4 (and Figures 2-16 & 2-17) for the MS2000 models.

Table 2-3, AC Input/Output Wiring Configurations

	SI/SO (30A) Single In/ Single Out	SI/SO (60A) Single In/ Single Out	SI/DO Single In/ Dual Out	DI/SO Dual In/ Single Out	DI/DO Dual In/ Dual Out
AC Source[1] Required	120 VAC @≤30A	120 VAC @>30A (60A)	120/240 VAC (or 2 separate legs of 120 VAC) @≤15A per leg (-15B models); or ≤20A per leg (-20B models)	120/240 VAC (or 2 separate legs of 120 VAC) @≤30A per leg	120/240 VAC (or 2 separate legs of 120 VAC) @≤30A per leg
Reason to Use	Have an 120 VAC source that is ≤30A. Requires a separate inverter sub-panel.	Have an 120 VAC source that is >30A. Requires a separate inverter sub-panel.	A separate inverter sub-panel is not required for -XXB models. Inverter pass-thru capability limited on each leg by model used.	Want dedicated charging and dedicated pass-thru while the AC source is on. Requires a separate inverter sub-panel.	May need to power 240 VAC loads if AC source on (requires 120/240 VAC source). Requires a separate inverter sub-panel.
Appropiate Models	MS2012 MS2812 MS2024 MS4024 MS4048	MS2012 MS2812 MS2024 MS4024 MS4048	MS2012-20B MS2012-15B MS2812[3] MS2024[3] MS4024[3] MS4048[3] MS4048-20B	MS2012 MS2812 MS2024 MS4024 MS4048	MS2012 MS2812 MS2024 MS4024 MS4048
Maximum Input Breaker Required – Minimum Wire Size (AWG)	30A (single pole) – #10 AWG (In & Out)	60A (single pole) – #6 AWG (In & Out); Can be split to two #10 AWG (for HOT 1 & HOT 2)	For full charging and pass-thru -15B=45A SP -20B=60A SP – -15B In=#8 (split to #12 x2) -20B In=#6 (split to #10 x2) -15B Out=#14 x2 -20B Out=#12 x2	30A (dual pole) – #10 AWG (In & Out)	30A (dual pole) – #10 AWG (In & Out)
Maximum Inverter Pass-thru capacity	3600W (30A @120 VAC)	7200W (60A @120 VAC)	-15B models: 15A/leg (30A max.); -20B models: 20A/leg (40A max.)	3600W (30A @120 VAC)	7200W (2 legs of 30A @120/240 VAC or 2 legs of 30A @120 VAC)[2]
Diagram	Figure 2-11	Figure 2-12	Figure 2-13	Figure 2-14	Figure 2-15

Note[1] *– AC source is from either the utility/grid power (i.e., shorepower) or an AC generator.*

Note[2] *– If two legs of 30A @120 VAC used, they must be from the same source (i.e., common neutral). For example, 2 legs from a 3-phase source can be used.*

Note[3] *– These MS Series models require a sub-panel for this particular configuration.*

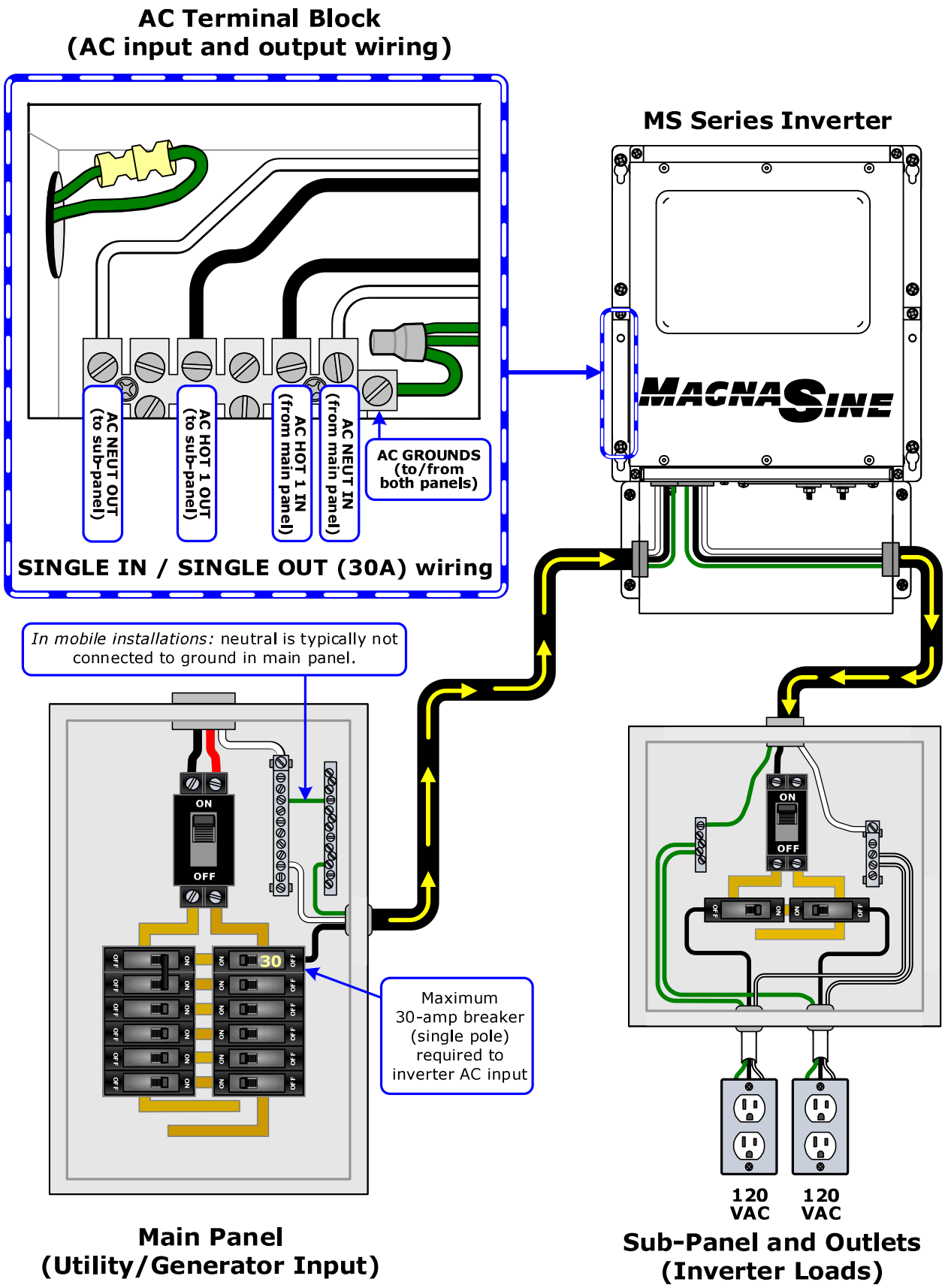

Figure 2-11, AC Wiring for Single In – Single Out (30 A) Configurations

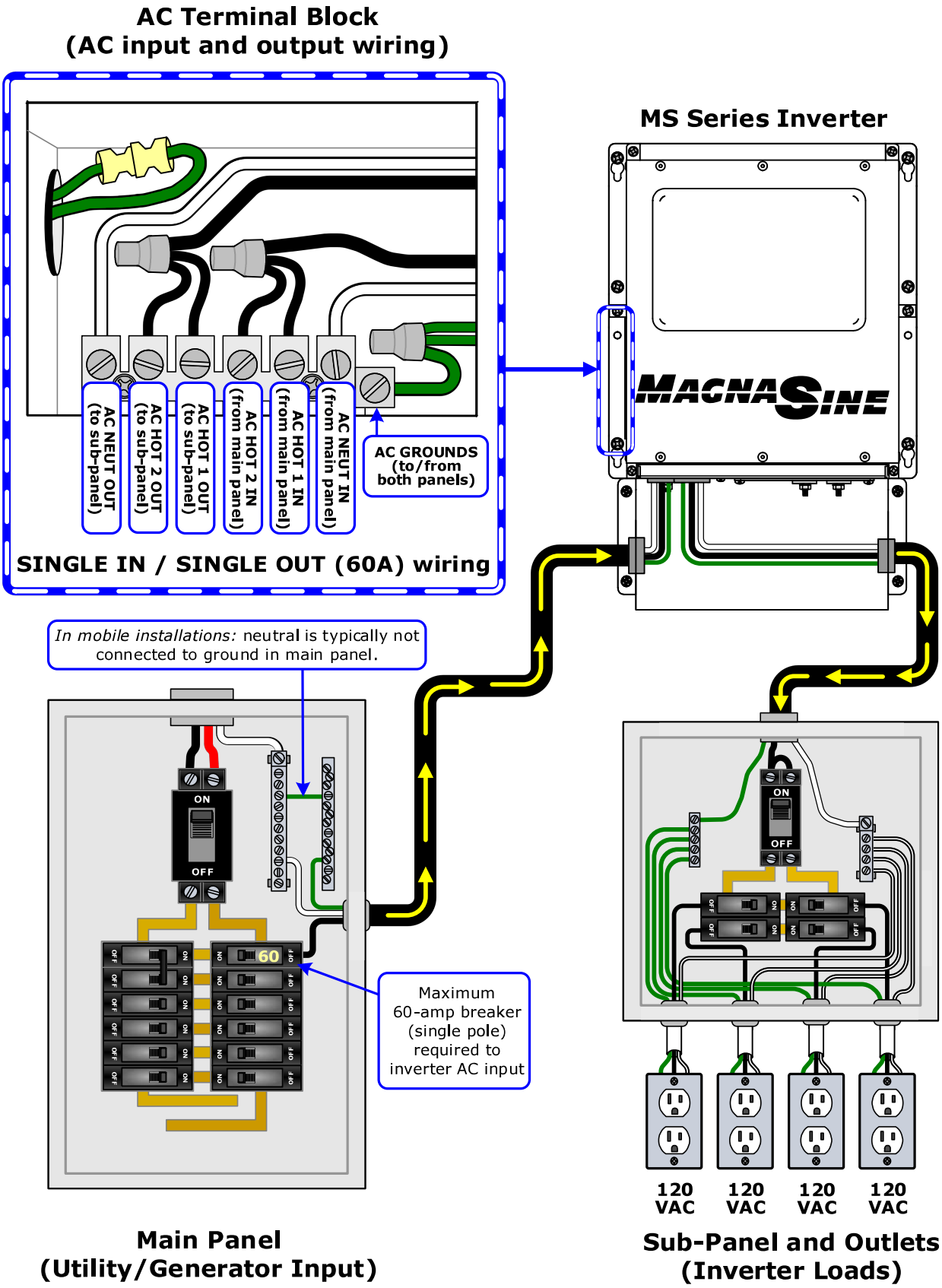

Figure 2-12, AC Wiring for Single In – Single Out (60 A) Configurations

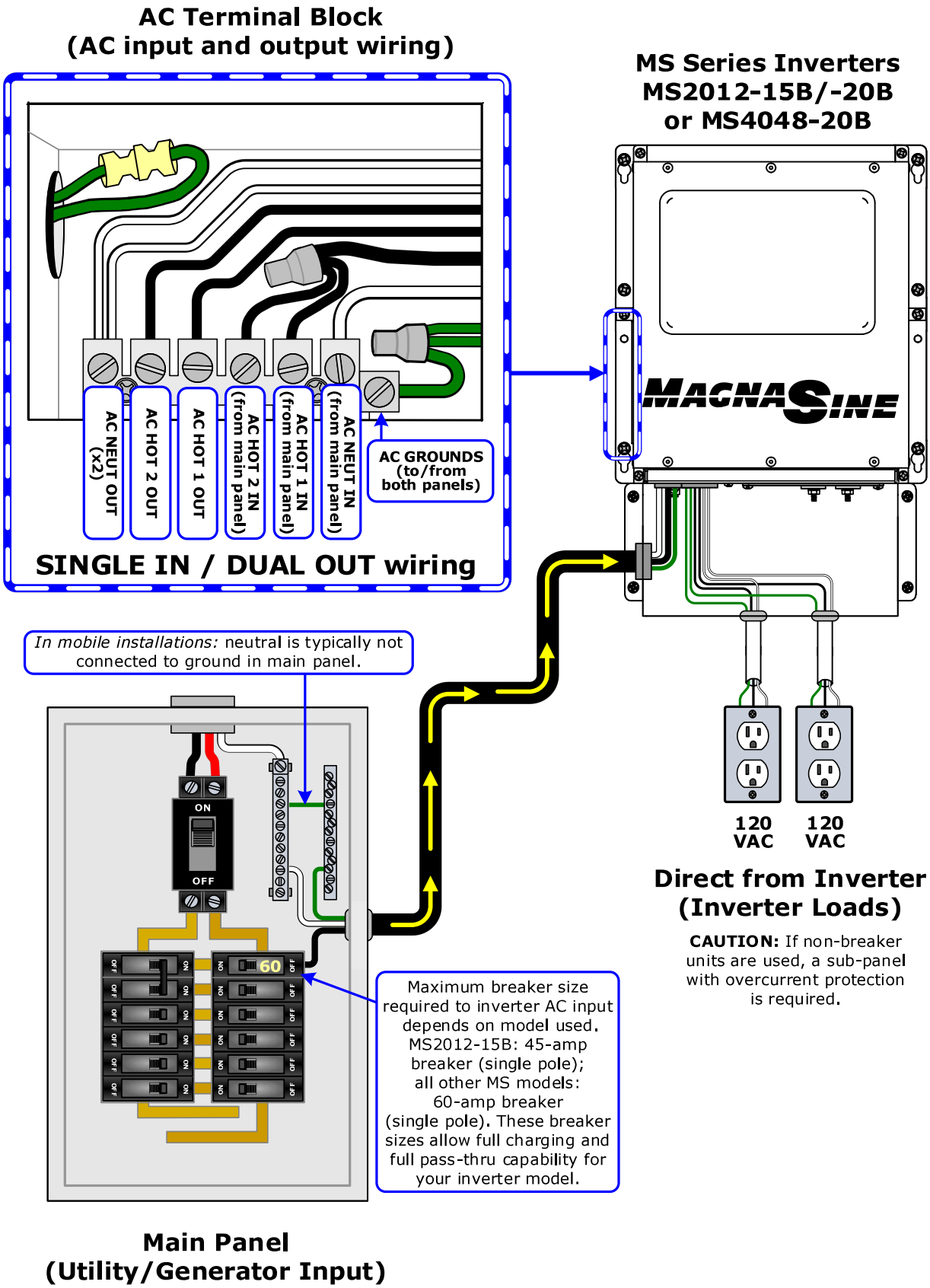

Figure 2-13, AC Wiring for Single In – Dual Out Configurations

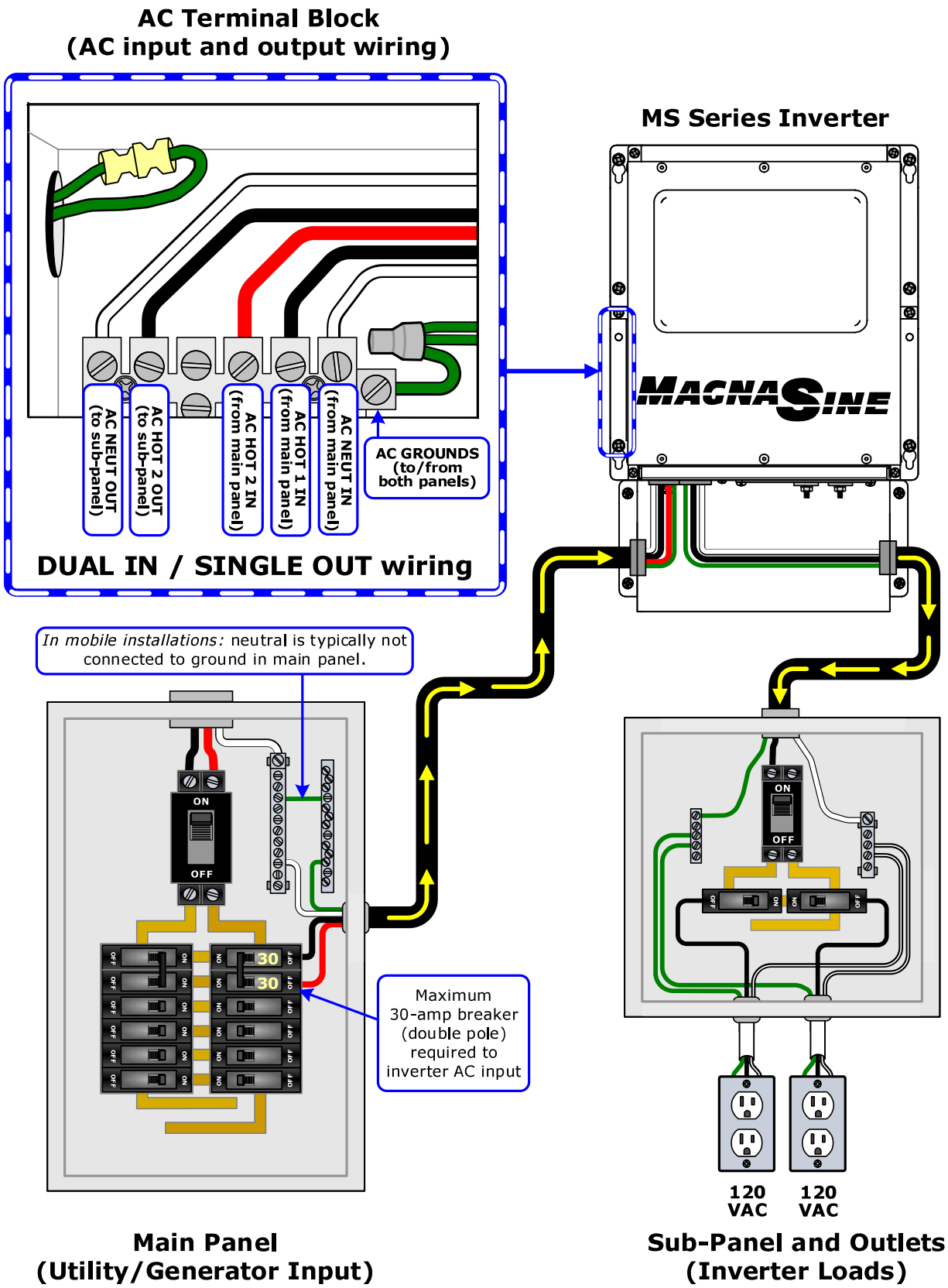

Figure 2-14, AC Wiring for Dual In – Single Out Configurations

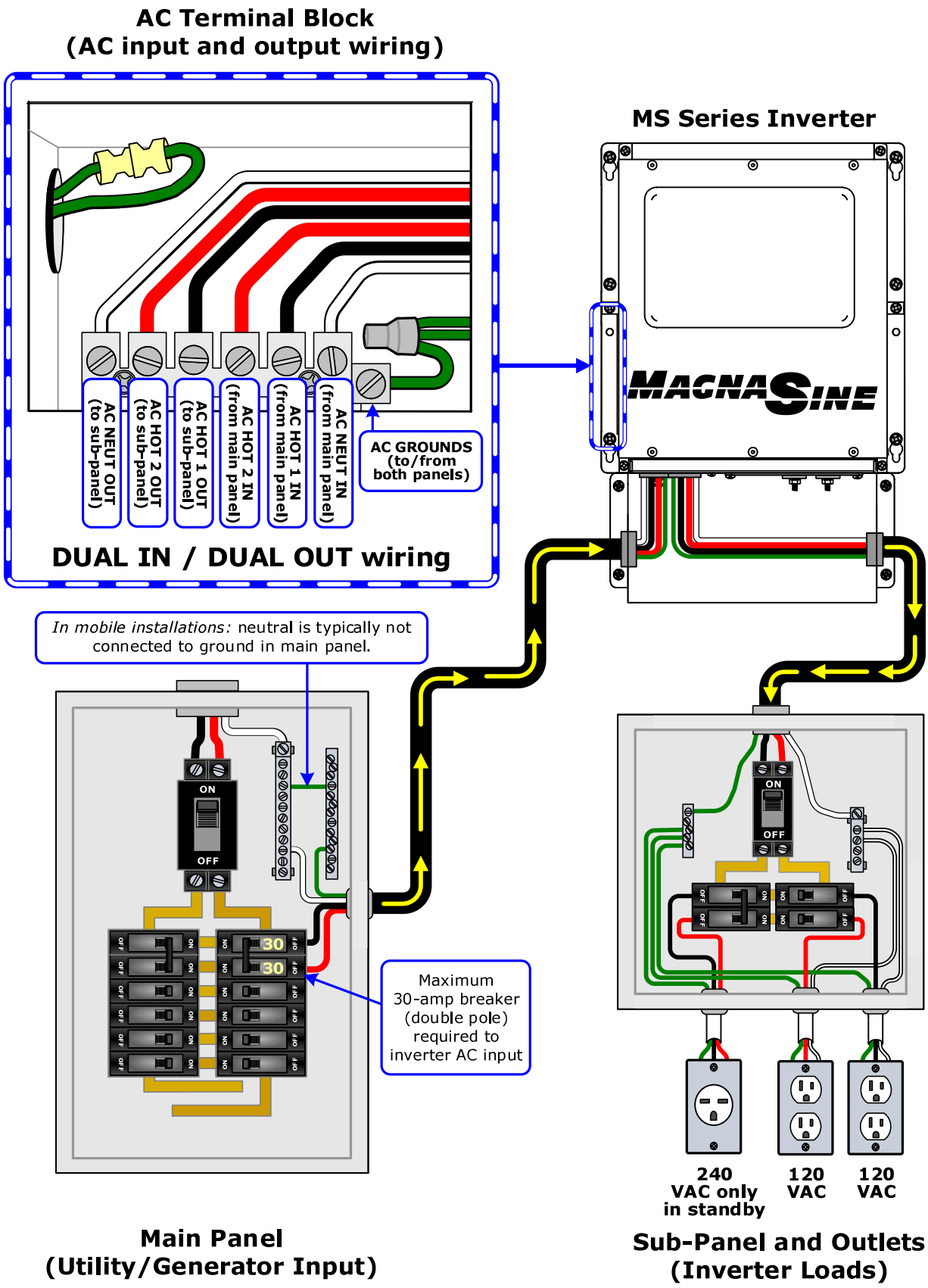

Figure 2-15, AC Wiring for Dual In – Dual Out Configurations

2.5.7 AC Conductor Wiring (MS2000 models)

The MS2000 offers a cost-effective alternative to the MS2012 while still providing the same features. This model has a slightly lower height, but otherwise has the same footprint as the other MS Series inverters. The MS2000 uses wire leads to connect the AC wires and can be wired in a single in – single out configuration, as well as a single in – dual out configuration (-15B & -20B).

The following steps are basic guidelines for installing and connecting the AC wiring into and out of the inverter. Refer to Table 2-4 to determine your AC wiring configurations before beginning.

WARNING

Before making any AC connections, make sure the inverter is disconnected from the battery and that no AC power is connected to the inverter.

Wiring the Inverter AC Input

1. Remove the two Phillips screws on the AC access cover (Figure 1-3, Item 15) to access the internal AC wiring.
2. Route the wires (hot, neutral, and ground) from the AC electrical main panel through one of the strain relief clamps to the AC INPUT. Tighten the strain relief clamp securely on the wires. Always leave a little extra slack in the wiring.
3. Connect the AC hot in wire (BLACK) from the main panel's dedicated breaker to the inverter's (BLACK) AC HOT IN wire using field wiring leads.
4. Connect the AC neutral in wire (WHITE) from the main panel's neutral busbar to the inverter's (WHITE) AC NEUT IN wire using field wiring leads.

Wiring the Inverter AC Output

5. Route the wires (hot, neutral, and ground) from the inverter's AC OUTPUT to the AC electrical sub-panel (or outlets, if using the output breaker versions) through the other strain relief clamp. Tighten the strain relief clamp securely on the wires.
6. Connect the inverter's AC HOT 1 OUT (BLUE) wire to the sub-panel main breaker (or, to the hot connections on the outlets if using the output breaker versions) using field wiring leads.

NOTICE

You must connect to the HOT 1 IN terminal if you want to use the battery charger.

7. Connect the inverter's AC NEUT OUT (WHITE w/BLACK) wire to the sub-panel's neutral busbar (or to the neutral connections on the outlets, if using the output breaker versions—see Figure 2-17) using field wiring leads.

Wiring the Inverter AC Ground

8. Combine the ground (GREEN) wire from the main panel's ground busbar and the ground (green)wire from the sub-panel's ground busbar (or the ground connection on the outlets, if using the output breaker versions). After these grounds are combined, use field wiring leads to connect them to the inverter's AC GROUND (GREEN) wire.

AC Wiring Inspection

9. Verify all wire runs are secured. If installed in a mobile installation, use wire ties or other non-conductive fasteners to prevent chafing or damage from movement and vibration.
10. Verify strain reliefs or grommets are in place to prevent damage to the wiring or conduit where it passes through walls/bulkheads or other openings.
11. After verifying all AC connections are securely fastened, replace the AC wiring access cover and the covers to the main electrical/distribution panel.

2.5.8 AC Wiring Configuration (MS2000 models)

The following table provides the different wiring configurations for installing and connecting the AC conductors to and from MS2000 model inverters (see Figures 2-16 and 2-17 for installation diagrams showing these configurations).

Table 2-4, AC Input/Output Wiring Configurations (MS2000 models)

	SI/SO (30A) Single In/Single Out (30A)	**SI/DO Single In/ Dual Out**
AC Source[1] Required	120 VAC @ ≤30 amps	120 VAC @ ≤30 amps @ ≤15 amps per leg (-15B models); or ≤20 amps per leg (-20B models).
Reason to Use	Have an 120 VAC source that is ≤30 amps. Requires a separate inverter sub-panel.	Do not want to install a separate inverter sub-panel. Inverter pass-thru capability limited by model used.
Appropriate Models	MS2000	MS2000-15B MS2000-20B
Maximum Input Breaker Required **–** **Minimum Wire Size**	30A (single pole) – #10 AWG (In & Out)	-15B models: 30A (single pole); -20B models: 30A (single pole) – #10 AWG (In) -20B models: #12 AWG x2 (Out) -15B models: #14 AWG x2 (Out)
Maximum Inverter Pass-thru capacity	3600W (30A @ 120 VAC)	-15B models: 15A/leg (30A max.); -20B models: 20A/leg (30A max.)
Wiring Diagram	Figure 2-16	Figure 2-17

Note[1] *– AC source is from either the utlity/grid power (i.e., shorepower) or an AC generator.*

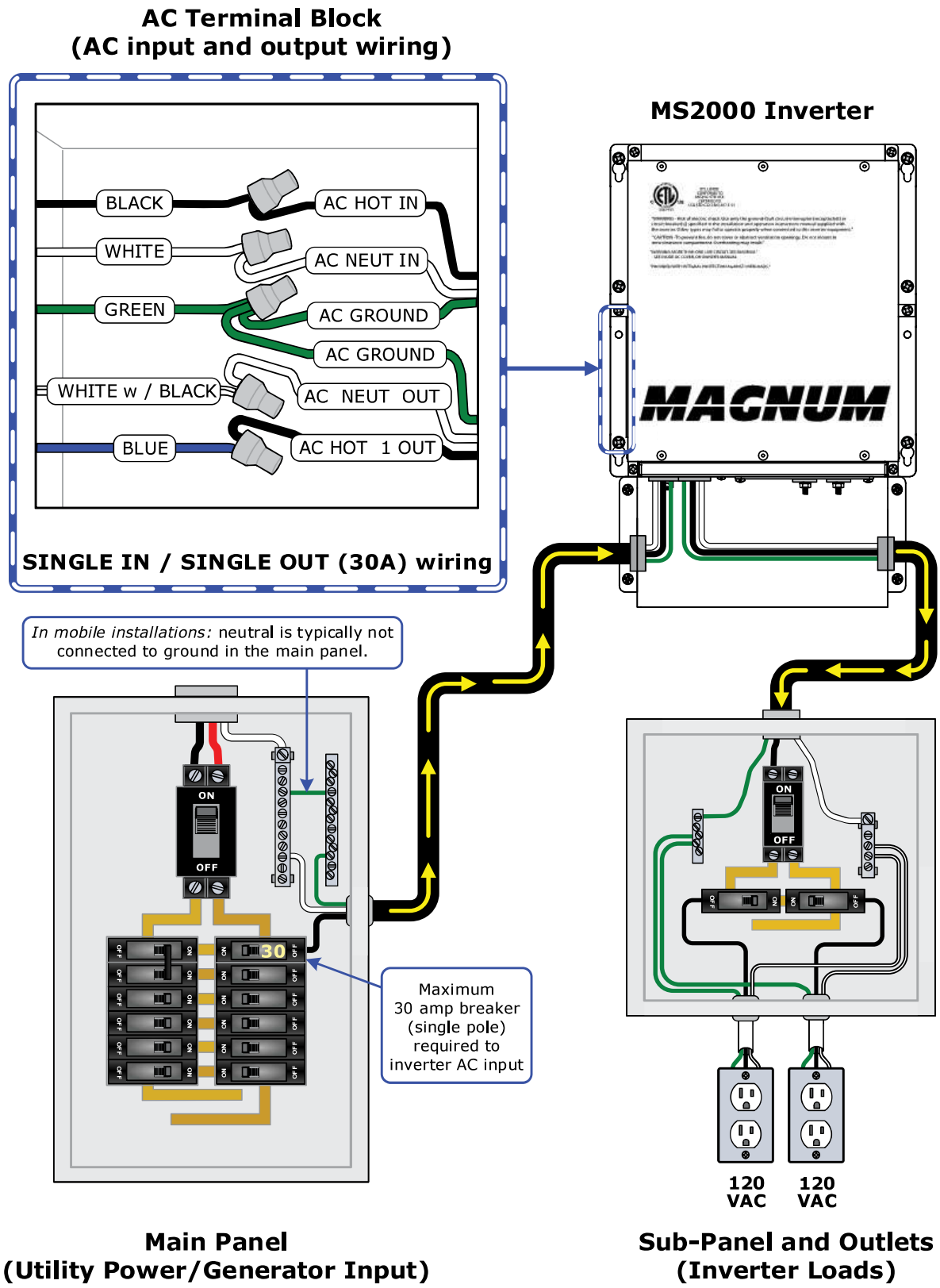

Figure 2-16, AC Wiring for MS2000 Models

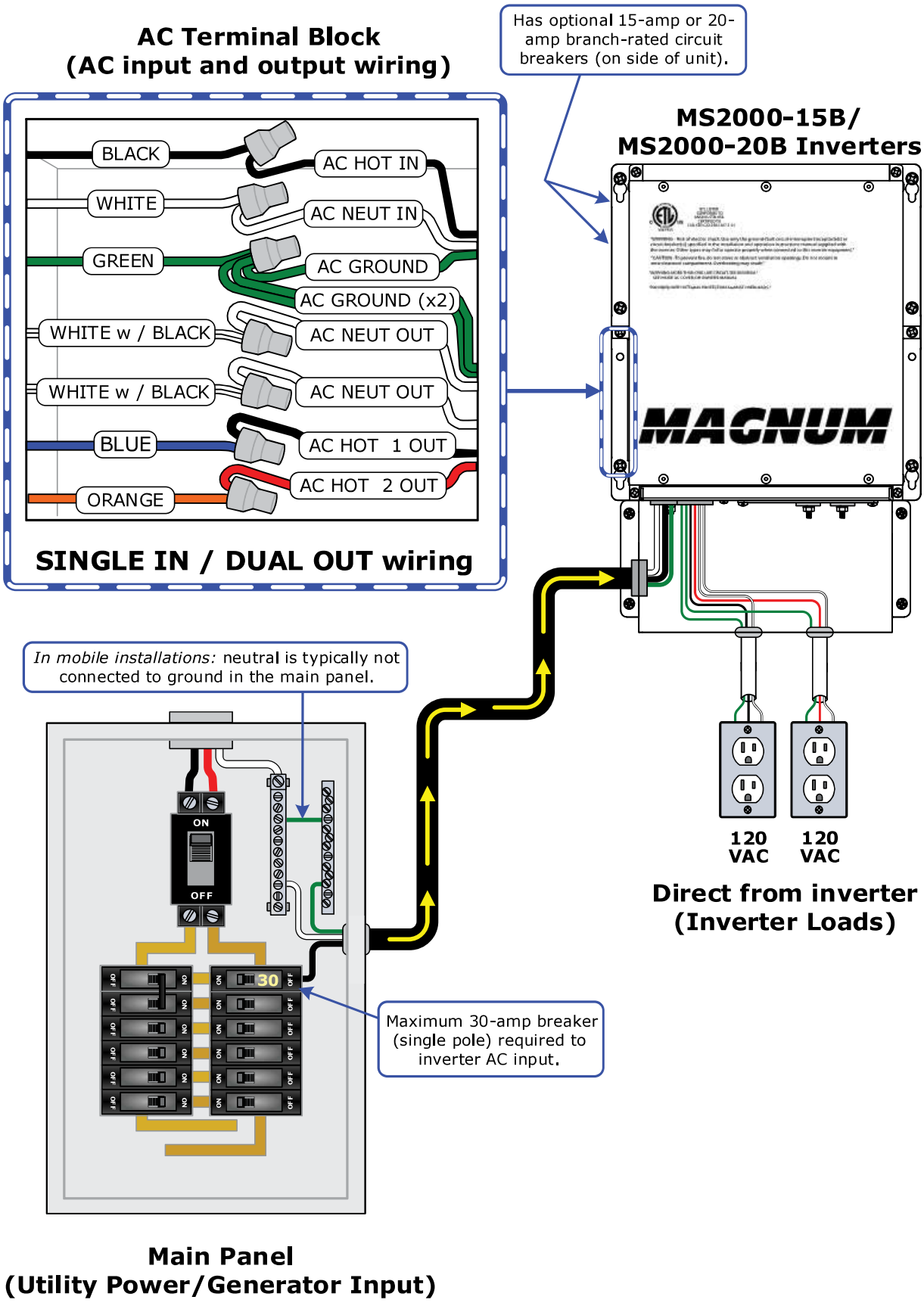

Figure 2-17, AC Wiring for MS2000-15B/-20B Models

2.6 Grounding Inverters

The inverter/charger should always be connected to a permanent, grounded wiring system. An inverter system that is properly grounded will limit the risk of electrical shock, reduce radio frequency noise from the inverter, and minimize excessive surge voltages induced by lightning. This is done by ensuring there is a well-defined, very low-resistance path from the electrical system to the grounding system. This low-resistance path helps stabilize the electrical system voltage with respect to ground and carries fault currents directly to ground if the electrical system malfunctions.

To understand how the conductors in the electrical circuit will be connected to the system ground, the following terms should be understood:

- **Grounded Conductor (GC):** The wire/cable in the electrical system that normally carries current (usually AC neutral and/or the DC negative), and is intentionally connected or "bonded" to the ground system. This wire, or the ends of this wire, should be colored white or gray.
- **Equipment Grounding Conductor (EGC):** A wire/cable that does not normally carry current and is used to connect the exposed metal parts of equipment—that might be accidentally energized—to the grounding electrode system or to the grounded conductor. This wire, or the ends of this wire, should be green or green with a yellow stripe; this wire can be bare copper.
- **Grounding Electrode Conductor (GEC):** The wire/cable that does not normally carry current and connects the grounded conductor and/or the equipment grounding conductor to the grounding electrode at the service equipment.
- **Grounding Electrode (GE):** A ground rod or conducting element that establishes an electrical connection to the earth.
- **System bonding jumper (SBJ):** The connection between the grounded circuit conductor in the electrical system and the equipment grounding conductor at a separately derived system.

The MS Series inverter/charger uses both AC and DC power; however, the AC electrical system is isolated from the DC electrical system by an internal transformer. Although this inverter/charger has two electrical systems, each electrical system must be properly grounded and connected to a common "earth" reference. Refer to Figure 2-18.

For proper grounding, each electrical system must connect all exposed metal parts of equipment (via equipment grounding conductors – EGC) and one of the current-carrying conductors (grounded conductor – GC) together at a common point (ground busbar – GBB), usually by a system bonding jumper (SBJ) in an electrical service disconnect panel. The common point of each electrical system is then connected (via grounding electrode conductor – GEC) to the common ground reference, such as a ground rod (grounding electrode – GE). This connection to earth should only be made at one point in each electrical system; otherwise, parallel paths will exist for the currents to flow. These parallel current paths would represent a safety hazard and are not allowed in installations wired per the NEC/CEC.

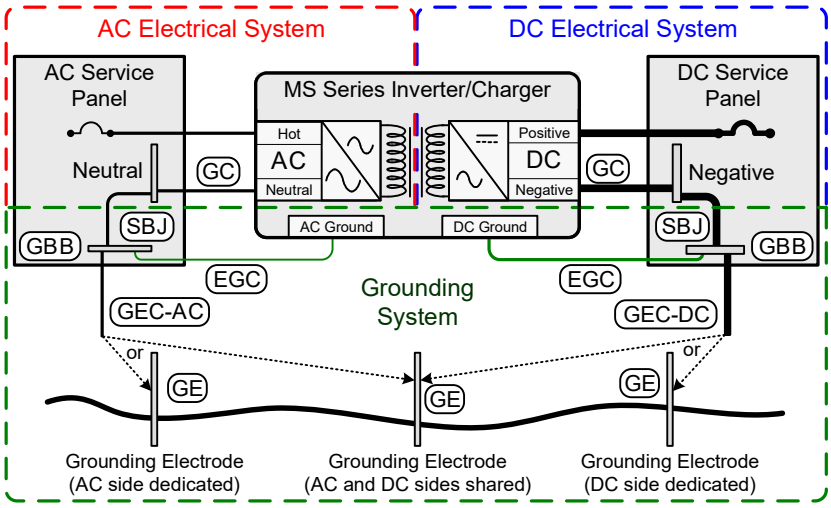

Figure 2-18, Grounding System for MS Series

2.6.1 Sizing the Grounding Electrode Conductors

AC Side – The size of the AC grounding electrode conductor (GEC – AC) depends on the size of the largest ungrounded conductor feeding the AC load center. One #8 AWG (8.4 mm²) copper conductor will serve as an AC grounding electrode conductor (GEC – AC) for AC power conductors smaller than and including #2 AWG (33.6 mm²) copper. See Table 2-5 for additional values.

Table 2-5, AC Grounding Electrode Conductor Sizing

Size of Largest Ungrounded Conductor	Minimum Size of Grounding Electrode Conductor
#2 AWG (33.6 mm²) or smaller	#8 AWG (8.4 mm²)
#1 to #1/0 AWG (42.4 to 53.5 mm²)	#6 AWG (13.3 mm²)
#2/0 or #3/0 AWG (67.4 to 85.0 mm²)	#4 AWG (21.1 mm²)
Over #3/0 AWG (85.0 mm²) through 350 kcmil	#2 AWG (33.6 mm²)

DC Side – To size the DC grounding electrode conductor, you must first determine which one of the following three methods will be used to connect the DC and AC grounding points in the inverter's two electrical systems to the common "earth" ground:

Method 1 (Figure 2-19): This method uses a separate grounding electrode for the DC system and the AC system. In this method—since there are multiple connections to the DC grounding electrode (GEC – DC)—the size of the DC grounding electrode conductor cannot be smaller than the largest conductor in the DC system (usually the battery-to-inverter cable).

The DC grounding electrode (GE – DC) must be bonded to the AC grounding electrode (GE – AC) to make a grounding electrode system. This bonding conductor (BC) cannot be smaller than the largest grounding electrode conductor, either AC or DC.

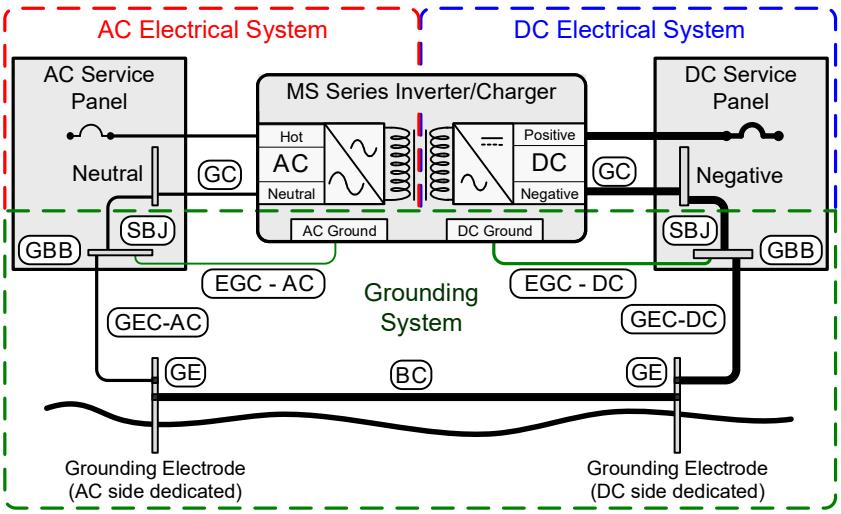

Figure 2-19, Multiple Connections to DC Ground Rod (Method 1)

Method 2 (Figure 2-20): When the AC and DC service panels are near each other, then the AC grounding electrode conductor (GEC – AC) and DC grounding electrode conductor (GEC – DC) can be connected to a single grounding electrode. In this method—since there are multiple connections to the DC grounding electrode (GEC – DC)—the size of the DC grounding electrode conductor cannot be smaller than the largest conductor in the DC system (usually the battery-to-inverter cable).

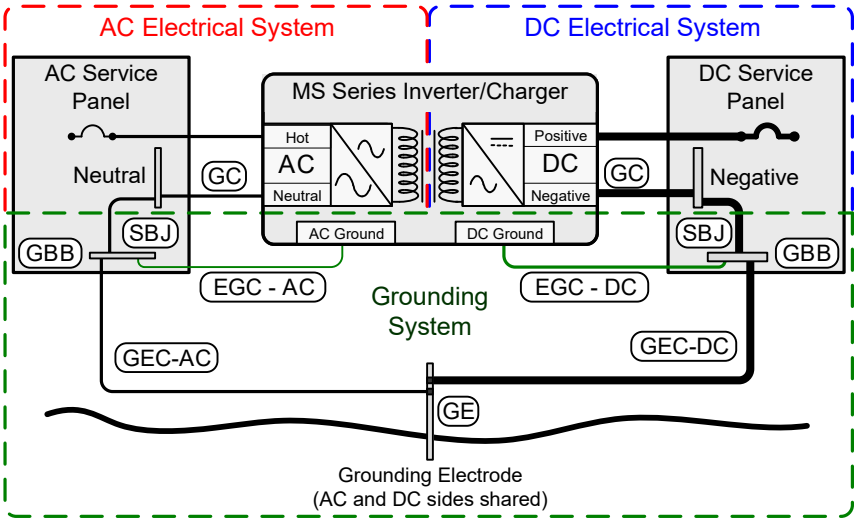

Figure 2-20, Multiple Connections to DC Ground Rod (Method 2)

Method 3 (Figure 2-21): The AC grounding electrode conductor (GEC – AC) is bonded to the DC ground point and the DC grounding electrode conductor (GEC – DC) is the *only connection* to the grounding electrode, which must be a rod, pipe, or plate electrode.

In this method, since there is only one connection to the ground rod, the DC grounding electrode conductor is not required to be larger than #6 AWG (13 mm^2) copper. The reasoning for allowing this smaller grounding electrode conductor is that it is only required to stabilize the system voltage with respect to earth, and the other properly-sized conductors in each electrical system will safely carry any fault currents if they occur.

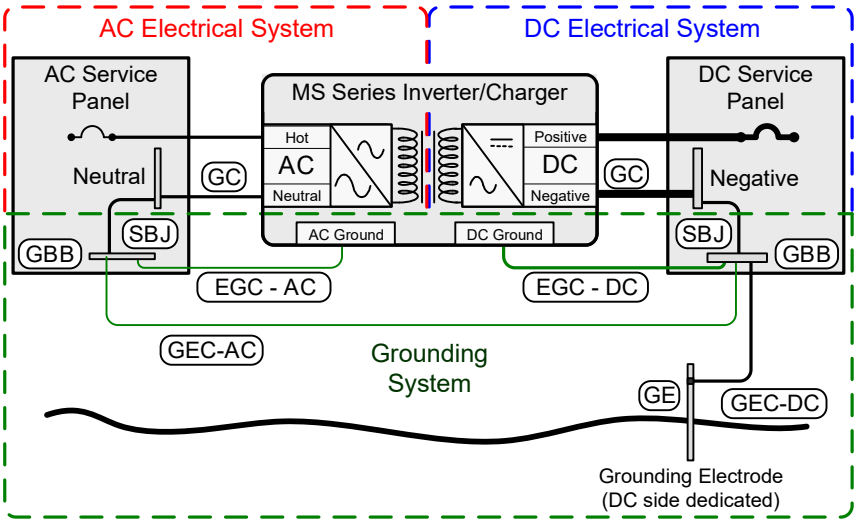

Figure 2-21, Single Connection to DC Ground Rod (Method 3)

2.6.2 System Bonding Jumper

The MS Series inverter does not include an internal bond between the grounded conductor (AC neutral/DC negative) and the equipment grounding terminals. This bond [system bonding jumper (SBJ)] is usually done in the main distribution panel for each electrical system.

⚠CAUTION

There should be one and only one point in each electrical system (both AC and DC) where the grounded conductor is attached to the grounding electrode conductor.

AC Side – The size of the system bonding jumper (SBJ) in the AC electrical system is based on the area of the largest AC ungrounded conductor. In accordance with the NEC, use Table 2-4 to determine the system bonding jumper size compared to the largest AC ungrounded conductor.

DC Side – The size of the system bonding jumper (SBJ) in the DC electrical system must not be smaller than the DC grounding electrode conductor (GEC – DC) used, which is determined from the grounding method that will be used (see Section 2.6.1).

2.6.3 Equipment Grounding Conductor

The inverter case and all other noncurrent-carrying exposed metal surfaces in the entire electrical system that may be accidentally energized must be grounded. The equipment-grounding conductor must be sized to safely carry the maximum ground-fault current likely to be imposed on it from where a ground-fault may occur. In accordance with the NEC, use Table 2-6 to size the equipment-grounding conductors. This table requires that the equipment-grounding conductor be sized according to the rating of the overcurrent device protecting the circuit.

⚠CAUTION

The connections and wiring for the equipment-grounding conductor must be continuous to allow fault currents to properly operate overcurrent devices. Where equipment is removed and this disconnects the bonding connection between the grounding electrode conductor and exposed conducting surfaces, a bonding jumper must be installed while the equipment is removed.

AC Side – Where the AC output from the inverter is connected to an AC load center, there should be an equipment grounding conductor connected between the inverter case and the grounding point in the AC load center. The AC equipment grounding conductor (EGC – AC) is sized per Table 2-6 and is connected to the inverter's AC equipment grounding terminal shown in Figure 2-10 (or a grounding wire for the MS2000 models).

DC Side – Since the currents on the DC side are higher than the AC side (10 times at 12 volts, 5 times at 24 volts), the equipment grounding needs are different. The DC equipment grounding conductor (EGC – DC) is sized per Table 2-6 and connected to the DC equipment grounding terminal on the inverter as shown in Figure 1-2, Item 7.

Table 2-6, Equipment Grounding Conductor Sizing

Rating of Overcurrent Device	Minimum Size of Copper Ground Wire
15 amps	#14 AWG (2.1 mm^2)
20 amps	#12 AWG (3.3 mm^2)
30 – 60 amps	#10 AWG (5.3 mm^2)
100 amps	#8 AWG (8.4 mm^2)
200 amps	#6 AWG (13.3 mm^2)
300 amps	#4 AWG (21.1 mm^2)
400 amps	#3 AWG (26.6 mm^2)

2.6.4 Grounding on Boats

When installing the MS Series inverter/charger on a boat, there are several considerations that must be followed when grounding to ensure a safe installation, prevent galvanic corrosion, and to adhere to ABYC (American Boat and Yacht Council) standards.

Ensure a Safe Ground Connection

When AC on the boat is being supplied by shorepower, the onboard neutral should be connected to safety ground on the dock[1]. Consequently, neutral and safety ground should not be connected anywhere on the boat when shorepower is present. When AC on the boat is being supplied by the MS Series inverter, the inverter's output neutral is connected to safety ground through an internal relay, using its neutral-to-ground connection (shown in Figure 2-24).

The DC ground terminal on the MS Series must also be connected to the boat's safety ground bus. This ensures that both the inverter's AC and DC ground terminals are connected to the boat's safety ground bus as a safety measure to provide protection against faults, and to provide a path for AC fault currents while the boat is connected to shorepower.

Preventing the Risk of Corrosion

The inverter's AC and DC ground terminals must be connected to the boat's safety ground to provide an important safety feature. However, this ground connection introduces the risk of galvanic corrosion and/or electrolysis of the boat's underwater metallic hardware.

Two possible solutions are typically used to maintain the correct onboard grounding requirements while greatly reducing (if not eliminating) the risk of galvanic corrosion. These solutions would be either using a galvanic isolator or an onboard isolation transformer.

Galvanic isolators allow high AC voltage faults to pass, but block low voltage corrosion/electrolysis currents from conducting.

Marine isolation transformers allow the shorepower to be connected to one side of the transformer, and the boat's AC wiring system is connected to the other side. Since transformers do not allow DC currents to pass, the problem with galvanic corrosion is eliminated.

ABYC Inverter/Charger Grounding Requirements[2]

- **DC Grounding Connections:**

  1) The DC grounding conductor (equipment ground) shall be:

     a) connected from the metallic case or chassis of the inverter/charger to the engine negative terminal or its bus,

     b) of an ampacity equal to that of the DC positive conductor (under certain conditions, there is an exception to allow this conductor to be one size smaller—refer to the ABYC standard).

  2) The inverter/charger's negative battery terminal and DC grounded conductor (negative cable) shall not be connected to the inverter case or chassis at the inverter/charger itself.

- **AC Grounding Connections:**

  1) The AC grounding conductor (green) shall be connected to the inverter/charger in a manner so that the AC ground connection will not be disconnected in servicing. This conductor is in addition to and independent of the DC grounding conductor.

  2) The neutral for AC power sources shall be grounded only at the following points:

  a) the shorepower neutral is grounded only through the shorepower cable and not grounded on board the boat,

  b) the inverter neutral shall be grounded at the inverter, and the output neutral shall be disconnected from ground when the inverter is operating in the charger/pass-through mode,

  c) on systems using an isolation transformer or a polarization transformer, the inverter neutral (and the transformer secondary neutral) may be grounded at the AC main grounding bus instead of at the inverter.

  Note[1] *– The onboard neutral is not directly connected to safety ground on the dock if an isolation transformer is installed.*

  Note[2] *– See the ABYC Standard for complete AC/DC grounding requirements.*

2.6.5 Neutral to Safety Ground Bonding

The standards for safely wiring residential, commercial, RV/truck, and marine installations in the United States require the neutral and safety ground to be connected at the AC source; whether it is the utility feed in your home, an inverter, or a generator. This is to establish a specification that maximizes the possibility that a circuit breaker will activate if a hot wire-to-ground fault occurs. These standards also require that the AC neutral be connected to safety ground (often called a "bond") in one, and only one, place at any time. The single bond is established in order to make the electrical panel's neutral line safe, by connecting it to ground. Without this bond, the neutral can have up to 60 VAC with respect to ground. On the other hand, if more than one bond is established, currents can circulate between neutral and ground and cause "ground-loop" currents. These ground-loops can trip GFCIs, cause an electric shock hazard, and may be the reason for other annoying side effects.

In applications where you are using an inverter as one of your AC sources along with another AC source (i.e., utility power or generator), there is the potential of having multiple connections (bonds) between neutral and ground. Therefore, you must ensure that the inverter does not also connect the neutral-to-ground while the other AC source is actively powering the inverter loads. This can be prevented if your inverter is equipped with automatic neutral-to-ground switching.

⚠WARNING

In most electrical systems, the neutral-to-ground bond is located in the main utility service entrance panel. Remove any bond downstream from the inverter to prevent multiple bonds. If there is an inverter sub-panel—separate from a main electrical panel—it should have a removable wire that allows the neutral bus to be unbonded from the ground busbar.

All MS Series inverter/chargers have automatic neutral-to-ground switching to specifically work in multiple source or mobile (i.e., truck/RV/boat) applications. The MS Series inverters use an internal relay that automatically connects the AC neutral output terminal to the vehicle/boat's ground while inverting (Inverter mode) to provide the neutral-to-ground bond; as shown in Figure 2-22. However, when an external AC source (i.e., shorepower or a generator) is connected, another neutral-to-ground connection is introduced in the system. When the MS Series is connected to this external AC source and goes into Standby mode, the internal relay automatically opens the neutral-to-ground connection as shown in Figure 2-23. This design keeps two neutral-to-ground connections from occurring at the same time, thereby preventing an electrical shock hazard between the vehicle/boat's neutral and the external AC source's neutral.

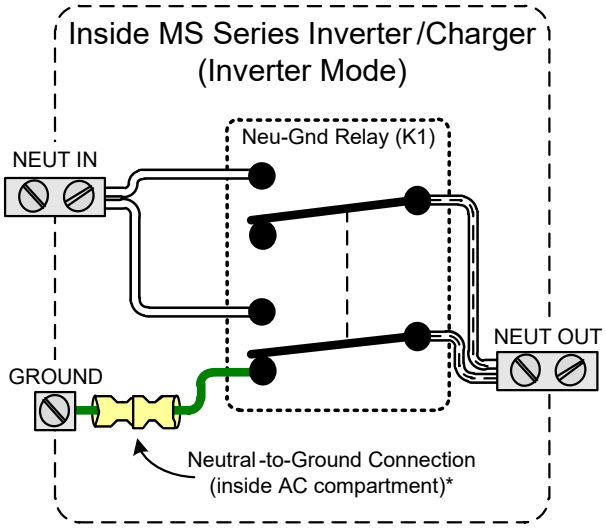

Figure 2-22, Neutral-to-Ground Connection (Inverter Mode)

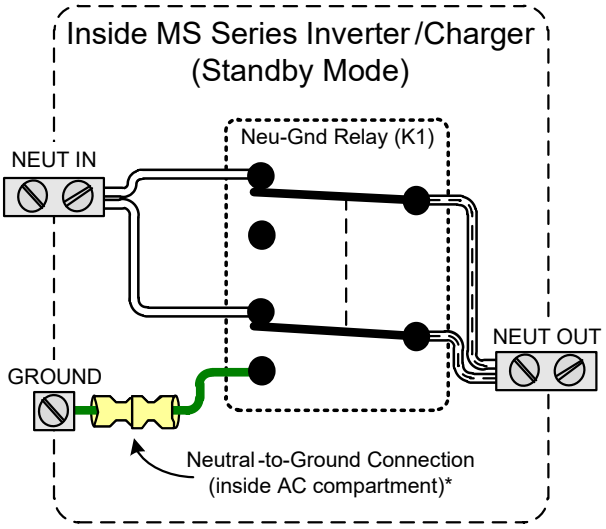

Figure 2-23, Neutral-to-Ground Connection (Standby Mode)

** – Normally located in the AC compartment; however, on MS2000 models the neutral-to-ground is located internally on the AC board.*

2.6.6 Disabling the Neutral-to-Ground Connection

All MS Series inverter/chargers have the automatic neutral-to-ground switching feature. In some installations/jurisdictions, this feature must be disabled by disconnecting the neutral-to-ground connection[1]. If you are not sure whether you must disable this feature, check your local code requirements. The following steps will guide you in disabling the neutral-to-ground switching feature.

Note[1] – *The neutral-to-ground switching feature cannot be disabled in MS2000 models.*

WARNING

Fire and Shock Hazard—disconnect all AC and DC sources before working in the AC wiring compartment.

NOTICE

The ground connection from the inverter's AC and DC ground terminals should still be connected to the system ground, even if ground switching has been disabled.

1. Locate and remove the AC access cover plate (Figure 1-3, Item 15) on the side of the MS Series inverter.
2. Inside the AC wiring compartment, locate the green wire with the insulated connector (Figure 2-24). This insulated connector connects the neutral and ground inside the inverter while inverting.
3. Pull the two ends of the insulated connector apart to separate the green wire; this will prevent the neutral and ground from connecting inside this inverter.
4. Move the two disconnected ends away from each other and push back out of the way. You must ensure that the two connector ends will not have any contact with any other wires within the AC compartment. You may want to use electrical tape to insulate the ends and secure them out of the way.

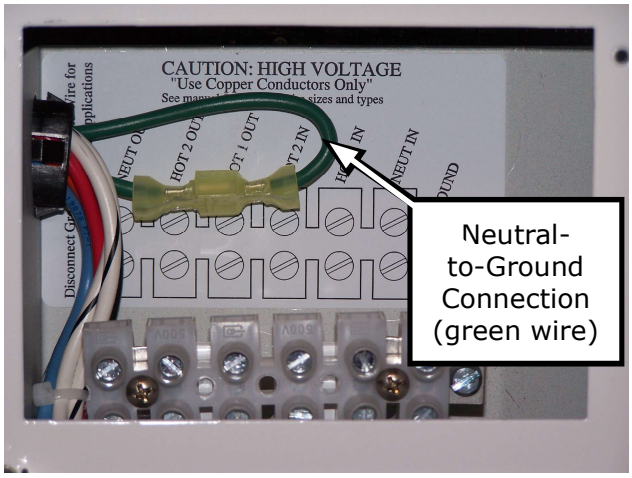

Figure 2-24, Disconnecting the Neutral-to-Ground Connection

2.6.7 Connecting a Large DC Ground Wire

Some marine installations require the DC ground wire to be the same size or one size smaller than the negative cable. Use the following steps to allow a larger ground wire to be connected.

1. Locate and remove the AC access cover plate (Figure 1-3, Item 15) on the MS inverter.
2. Locate the DC ground terminal (Figure 1-2, Item 7).
3. Within the AC wiring area, locate the hex nut on the back side of the DC ground terminal. After locating the hex nut, use a 7/16" wrench/nut driver to remove the hex nut, bolt, lock washer, and DC ground terminal—remove them from the chassis.
4. Reverse the removed bolt and place it back in the chassis hole to attach a correctly sized ground cable with a ring terminal to the MS Series chassis as shown in Figure 2-25.
   Note: *Ring terminal hole size is ≥1/4".*
5. Place the washer and nut on the bolt over the ground cable and securely tightened the nut [from 4 to 5 ft lbf-in (5.4 to 6.8 N-m)].

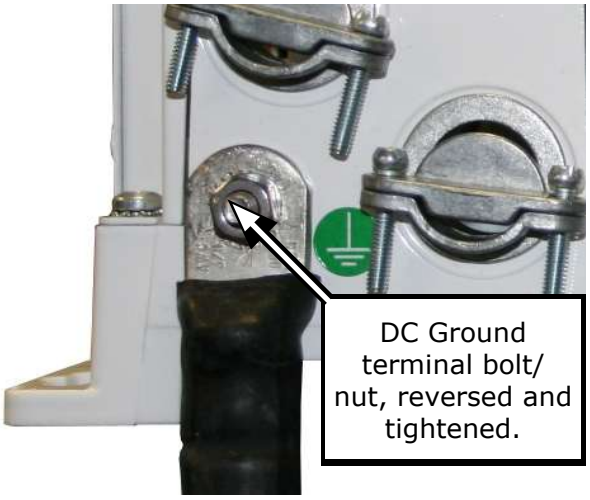

Figure 2-25, Connecting a Large DC Ground Wire

2.7 Inverter Notification Requirements

When an inverter is installed in a building, facility or structure, the NEC (National Electrical Code) requires a label or plaque to be provided. This label/plaque is required to be easily visible and provide information that informs personnel on the location of all electrical system disconnects. This is to ensure all power to a building is quickly located and shut down in an emergency. There are also specific requirements for this label/plaque depending on the inverter application, they are as follows.

2.7.1 Facilities with Standalone Systems

Any building, facility, or structure with a photovoltaic power system that is not connected to a utility service source and is a standalone system must have a permanent plaque or directory installed on the exterior of the building or structure at a readily visible location acceptable to the Authority Having Jurisdiction (AHJ). The plaque or directory must provide the location of system disconnecting means and information regarding whether the structure contains a standalone electrical power system.

2.7.2 Facilities with Utility Services and PV Systems

Buildings, facilities, or structures with both utility service and a photovoltaic system must have a permanent plaque or directory providing the location of the service disconnecting means and the photovoltaic system disconnecting means if they are not located at the same location.

2.7.3 Inverter Warning Label

A warning label as shown in Figure 2-26 is provided to inform all personnel that an inverter is installed in your electrical system. Affix this label in a clearly visible location at the electrical panel that is being powered by the inverter. This is because it might be falsely assumed that the panel is no longer "hot" after the AC power has been shut off, when power may actually still be available due to the inverter automatically powering the panel.

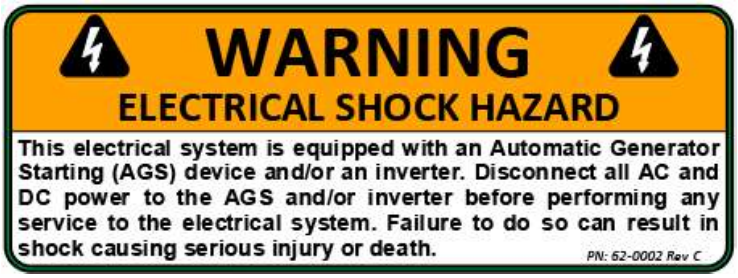

Figure 2-26, Warning Label

2.8 Final Inspection

1. Verify all cables/conduit runs are secured with wire ties or other non-conductive fasteners to prevent chafing or damage from movement and vibration.
2. Verify strain reliefs or grommets are in place to prevent damage to the wiring or conduit where it passes through walls, bulkheads, or other openings.
3. Verify all AC connections are correct and torqued to a maximum of 16 in-lbf (1.8 N-m).
4. Replace the covers on the main electrical/distribution panel.
5. Replace the chassis access cover.
6. Verify the inverter's front panel switch is in the "OFF" position.

NOTICE

If required by code, have the installation inspected by an electrical inspector.

2.9 Functional Test

After all electrical connections to the inverter, batteries, AC source and sub-panel have been completed, follow these steps to test the installation and the inverter's operation.

⚠CAUTION

Use a multimeter to verify the correct DC voltage for your particular inverter model (i.e., 24-volt battery bank for a 24-volt inverter) and to ensure the polarity of the battery voltage is correct (battery positive connected to the inverter positive terminal and the battery negative connected to the inverter negative terminal).

1. Apply battery power to the inverter by closing the DC circuit breaker. The inverter will remain off, but the green status indicator on the front of the inverter will quickly blink once to indicate that DC power has been connected and the inverter is ready to be turned on.
2. Prior to turning on the inverter, make sure all AC loads (i.e., appliances) are NOT connected to the inverter's output or to any AC outlets powered by the inverter.
3. Lightly press and release the inverter's ON/OFF switch to turn the inverter on. Verify the inverter's status indicator is blinking—indicating the inverter is on.
4. Connect a 10-25 watt light bulb to the inverter output and verify it comes on and shines normally. DO NOT connect anything larger than a 25-watt light bulb until all wiring and voltages are confirmed to be correct.

NOTICE

The inverter's AC output voltage will not be correct until a load greater than 5 watts (default setting) is connected to the inverter; or, Search mode is turned off with a remote display (ME-RC, ME-ARC, or ME-ARTR). A 10-25 watt light bulb is used as it is a sufficient load to bring the inverter out of Search mode and up to full voltage.

5. Check the AC output voltage of the inverter by connecting an AC voltmeter to the output terminals as shown in Figures 2-27, 2-28, or 2-29 (verify the correct output voltages).
6. Press and release the inverter's ON/OFF switch to turn the inverter off. The inverter's status indicator and the connected load should go off.
7. Apply AC power to the inverter's AC input. After the AC input power is qualified (approximately 15 seconds), the incoming AC power will transfer through the inverter to the inverter's AC output and power the light bulb. Verify that the inverter's status indicator and the light bulb come on.
8. Even though the light bulb is on, the inverter is currently disabled (off). Press and release the ON/OFF switch on the inverter to enable (turn on) the inverter.
9. Disconnect the incoming AC power to the inverter. Verify the light bulb remains on and is now powered by the inverter.

If the inverter passes all the steps, the inverter is ready for use. If the inverter fails any of the steps, refer to the Troubleshooting section in this manual.

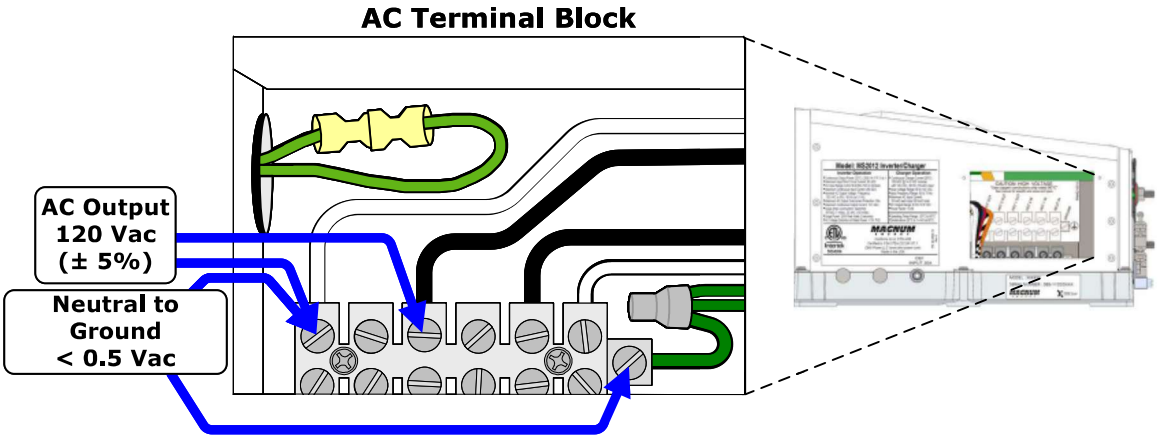

Figure 2-27, AC Voltage Checks

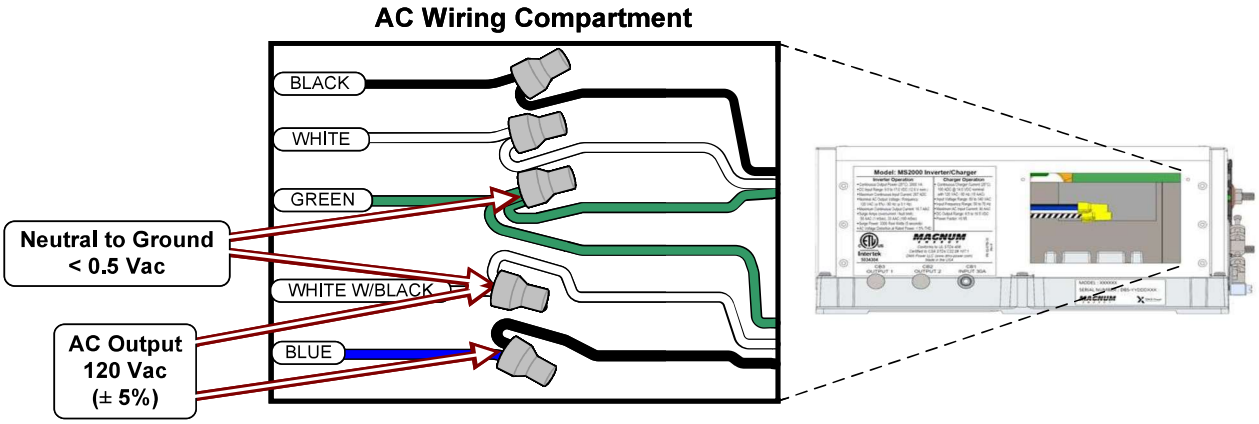

Figure 2-28, AC Voltage Checks (MS2000 models)

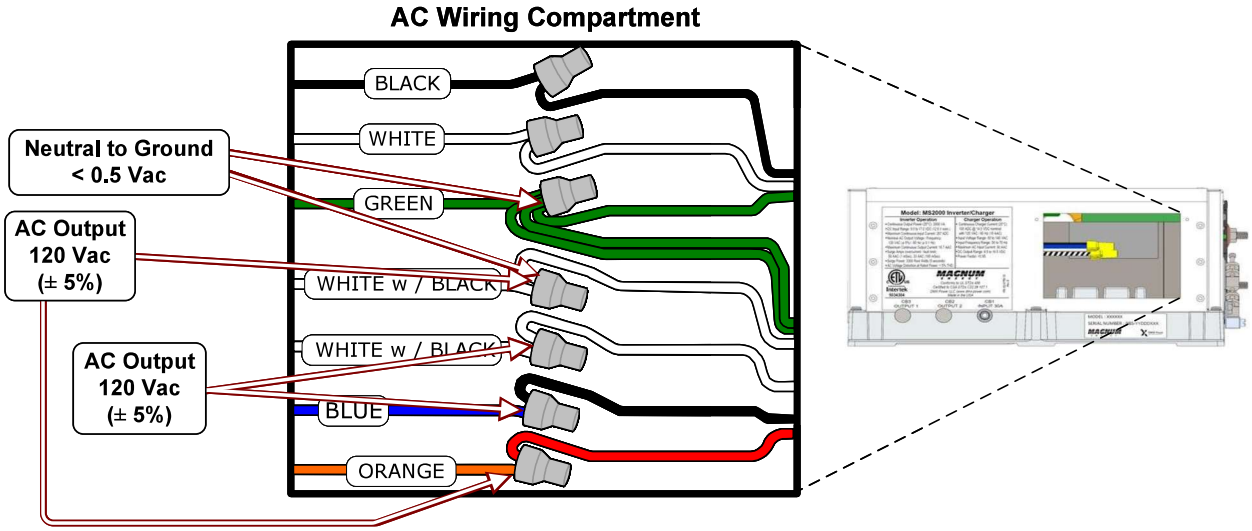

Figure 2-29, AC Voltage Checks (MS2000-15B/20B models)

3.0 Operation

The MS Series inverter has two normal operating routines: Inverter mode, which powers your loads using the batteries, and Standby mode, which transfers the incoming AC current (i.e., utility power or a generator) to power your loads and to recharge the batteries. This inverter also includes an extensive protection circuitry to shut down the inverter under certain fault conditions.

3.1 Inverter Mode

When the MS Series is first powered up, it defaults to the OFF mode. The momentary ON/OFF power switch (Figure 1-1, Item 1) must be lightly pressed to turn the inverter on. Subsequently pressing this switch alternately turns the inverter off and on.

Inverter OFF – When the inverter is off, no power is used from the batteries to power the AC loads, and the status LED will be off. If AC power from an external source (utility or generator) is connected and qualified on the inverter's AC input, this AC input power passes through the inverter to power the AC loads. However, if this AC power is lost, the AC loads are no longer powered because the inverter is off.

When the inverter is turned on, it operates either by "searching" or "inverting", depending on the connected AC loads.

Searching – When the inverter is first turned on, the automatic Search feature is enabled. This feature conserves battery power when AC power is not required. In this mode, the inverter pulses the AC output looking for an AC load (i.e., electrical appliance). Whenever an AC load (greater than 5 watts) is turned on, the inverter recognizes the need for power and automatically starts inverting. When there is no load (or less than 5 watts) detected, the inverter automatically goes back into Search mode to minimize energy consumption from the battery bank. When the inverter is searching, the inverter's green LED flashes (medium flash – blinks once every second).

NOTICE

The factory default value for the Search feature is 5 watts. It can be turned off or adjusted from 5 to 50 watts using a remote control display.

Inverting – When a load greater than 5 watts is connected to the inverter output, the MS Series inverts the DC power from the battery and supplies 120 VAC power to your sub-panel. The inverter's green LED flashes once every second (medium flash) to indicate it is inverting. The amount of time the inverter can be inverting and providing power is directly related to the amount of AC loads that are connected, and the capacity of the battery bank. Refer to Figures 3-1 , 3-2, and 3-3 to see the flow of power from the DC input to the AC output while in Inverter mode.

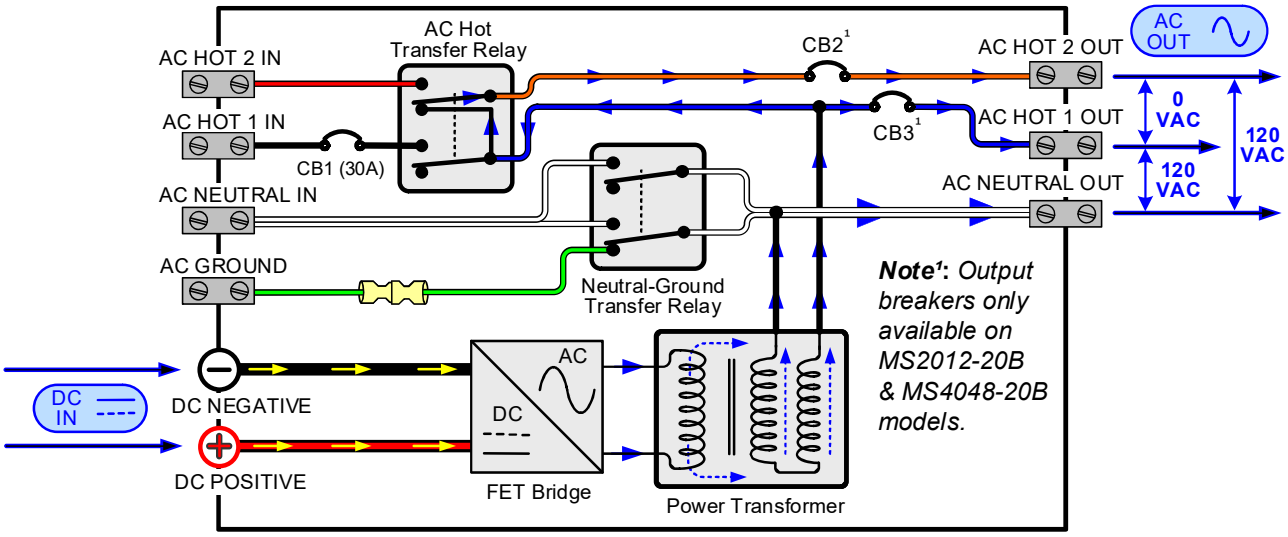

Figure 3-1, Power Flow – Inverter Mode (MS2012/2812/2024/4024/4048)

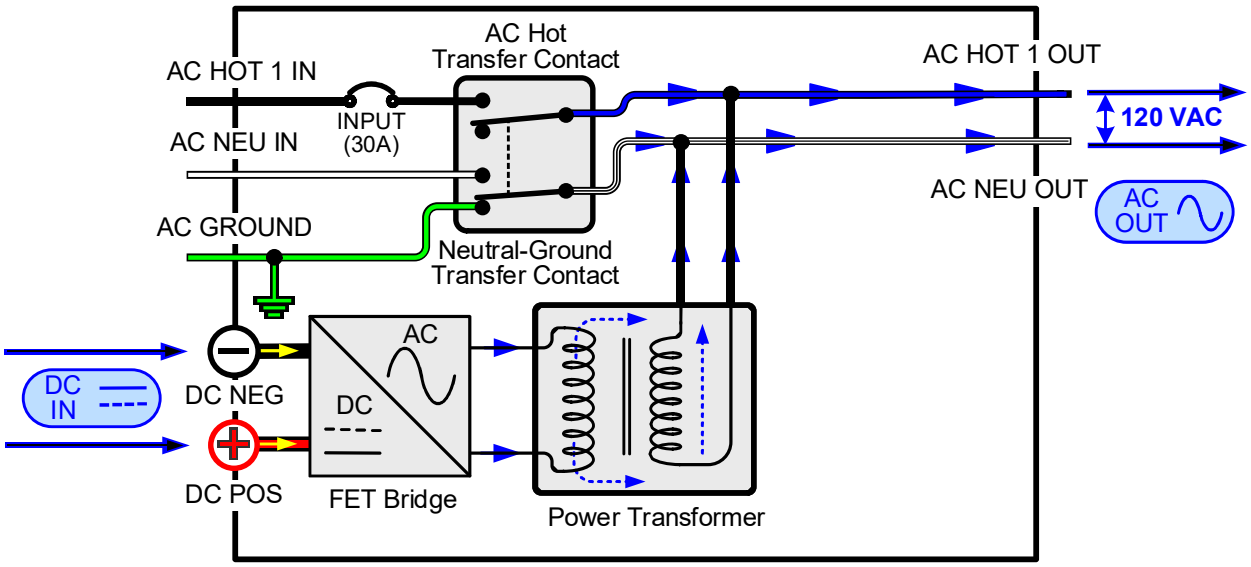

Figure 3-2, Power Flow – Inverter Mode (MS2000 models)

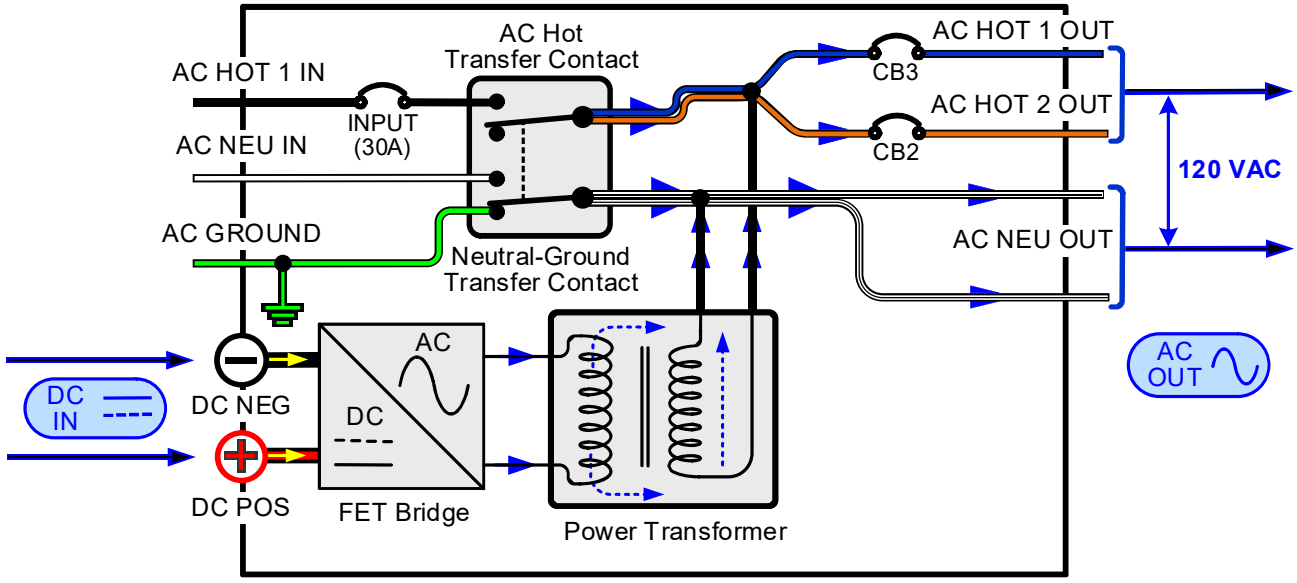

Figure 3-3, Power Flow – Inverter Mode (MS2000-15B/-20B models)

3.2 Standby Mode

The MS Series features an internal battery charger and an automatic transfer relay when operating in Standby mode. Standby mode begins whenever AC power (utility or generator) is connected to the inverter's AC input. Once the AC voltage and frequency of the incoming AC power is within the AC input limits, an automatic AC transfer relay is activated. This transfer relay passes the incoming AC power through the inverter to power the AC loads on the inverter's output. This incoming power is also used to activate a powerful internal battery charger to keep the battery bank charged in case of power failure. Refer to Figures 3-4, 3-5, and 3-6 to see the flow of power from the AC input to the DC and AC output while in Standby mode.

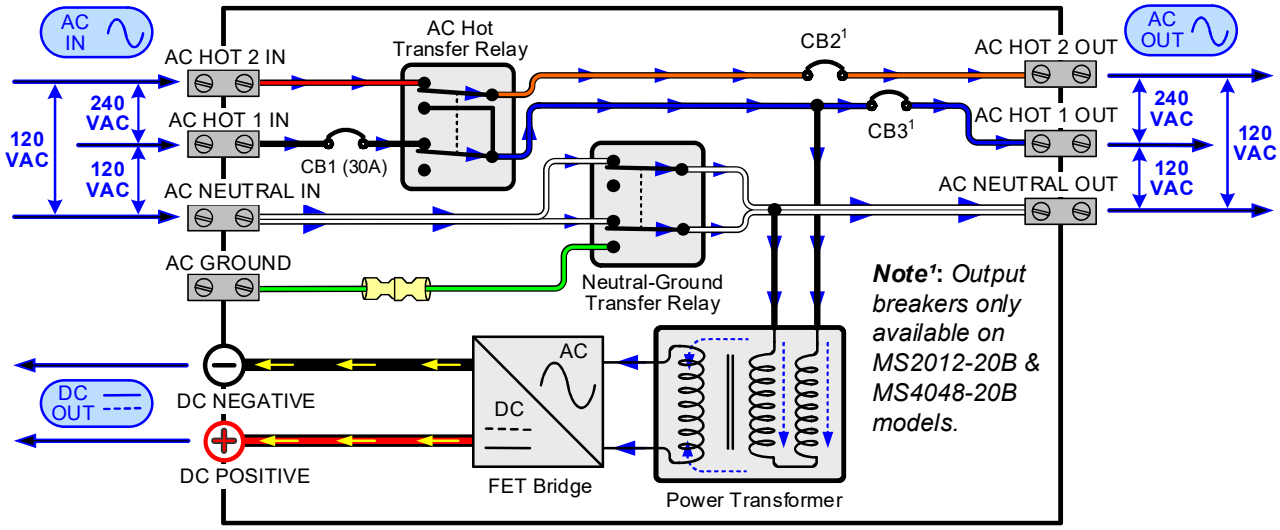

Figure 3-4, Power Flow – Standby Mode (MS2012/2812/2024/4024/4048)

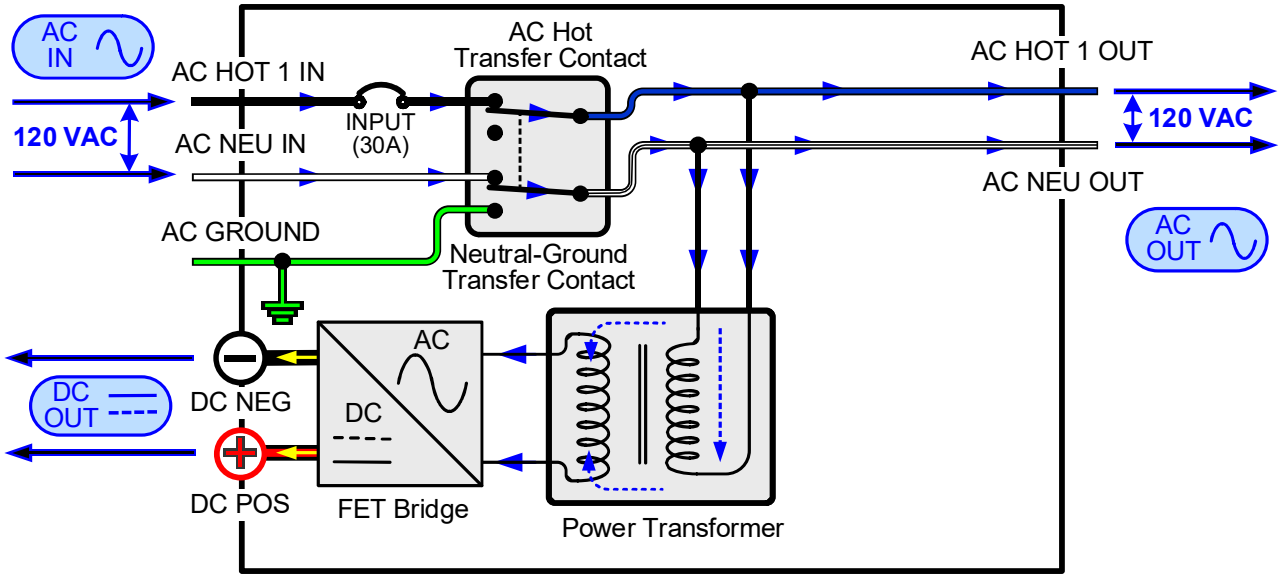

Figure 3-5, Power Flow – Standby Mode (MS2000 models)

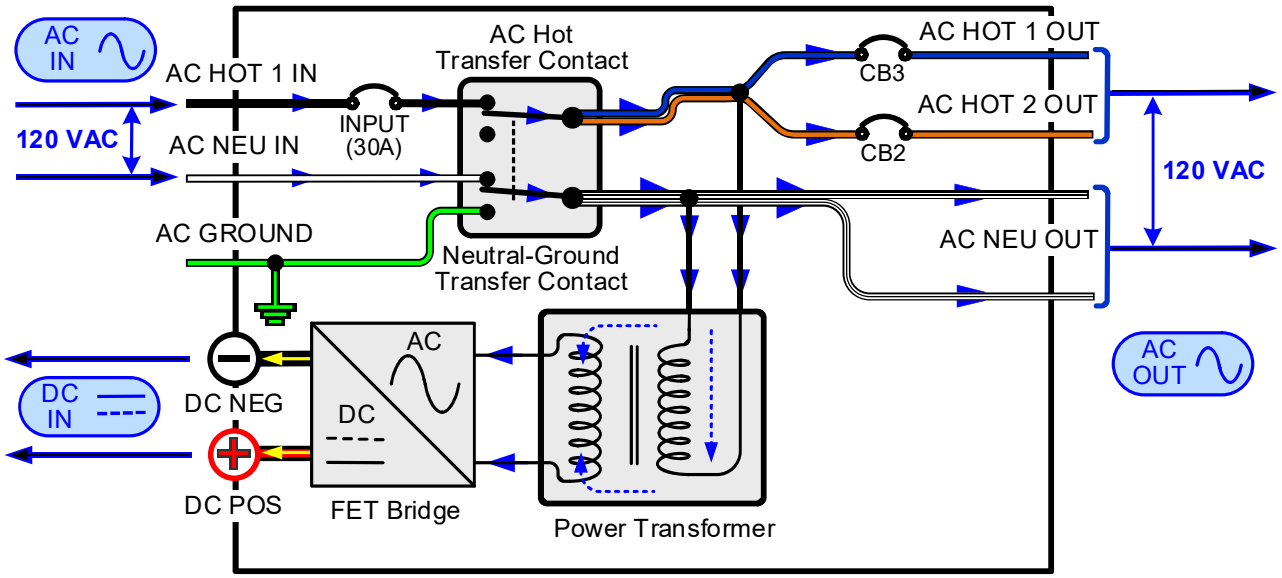

Figure 3-6, Power Flow – Standby Mode (MS2000-15B/-20B models)

3.3 Battery Charging

The MS Series is equipped with a PFC (Power Factor Corrected) and PI (Proportional-Integral) multi-stage battery charger. The PFC feature controls the amount of power used to charge the batteries to obtain a power factor as close as possible to 1 (or unity). This causes the battery charger to look like a resistor to the line (forces the charge current wave shape to mirror the voltage wave shape). The PI feature allows the charger voltage and current to change independently. These two features maximize the real power available from the AC power source (i.e., utility or generator), which translates into less power wasted and increased charging capabilities.

When an AC source is connected to the AC input, the inverter begins monitoring for acceptable AC voltage. Once the AC voltage is accepted, the AC transfer relay closes the charge mode begins. After the charge mode begins, the inverter's battery voltage is monitored to determine the charging stage. If the battery voltage is low (≤12.8 VDC/12-volt models, ≤25.6 VDC/24-volt models, or ≤51.2 VDC/48-volt models), the charger begins Bulk charging. If the DC voltage is high (>12.8 VDC/12-volt models, >25.6 VDC/ 24-volt models, or >51.2 VDC/48-volt models), the charger will skip the Bulk and Absorb charge stages and go directly to Float charging. However, if the incoming AC power is lost and returns within 2 minutes the charge mode returns to the charge stage it was in prior to losing AC input—regardless of the battery voltage.

The multi-stage charger in the MS Series can use up to five different charging stages to help monitor and keep the batteries healthy. The five stages include an automatic 4-stage charging process (Figure 3-7)—Bulk, Absorb, Float, and Full Charge—and a manual Equalization (EQ) charge stage. The automatic 4-stage charge process provides complete recharging and monitoring of the batteries without damage due to overcharging. The EQ stage (requires a remote control display to enable) can be used to stir up stratified electrolyte and to reverse any battery plate sulfation that may have occurred—if recommended by your battery's manufacturer.

While charging, the unit may go into charger back-off protection, which automatically reduces the charge current to the batteries. This is caused by: 1) The internal temperature is too hot – the charger automatically reduces the charge rate to maintain temperature; or 2) The AC input voltage falls below 90 VAC – the charger will stop charging to help stabilize the incoming AC voltage.

The Charge mode provides up to four separate charging stages: Bulk Charging, Absorb Charging, Float Charging and Full Charge (Figure 3-7).

Bulk Charging: This is the initial stage of charging. While bulk charging, the charger supplies the battery with controlled constant current. The charger remains in bulk charge until the absorption charge voltage (determined by the *Battery Type* selection*****) is achieved. The inverter's green LED stays ON (solid) to indicate bulk charging.

Absorb Charging: This is the second charging stage and begins after the absorb voltage has been reached. Absorb charging provides the batteries with a constant voltage and reduces the DC charging current in order to maintain the absorb voltage setting. The inverter's green LED flashes once every second (medium flash) to indicate absorption charging for 2 hours (determined by the *Battery AmpHrs* selection*****), then switches to float charging.

Float Charging: The third charging stage occurs at the end of the absorb charging time. While float charging, the charge voltage is reduced to the float charge voltage (determined by the *Battery Type* selection*****). In this stage, the batteries are kept fully charged and ready if needed by the inverter. The inverter's green LED flashes once every 8 seconds (slow flash) to indicate float charging. The Float Charging stage reduces battery gassing, minimizes watering requirements (for flooded batteries), and ensures the batteries are maintained at optimum capacity.

Full Charge (Battery Saver™ mode): The fourth stage occurs after four hours in the Float Charging stage. The Full Charge stage is designed to keep batteries fully charged over long periods, and to prevent excessive loss of water in flooded batteries or drying out of GEL/AGM batteries. In this stage, the charger is turned off and begins monitoring the battery voltage; if the battery voltage drops low (12.7 VDC or less on 12-volt models, 25.4 VDC or less on 24-volt models, and 50.8 VDC or less on 48-volt models), the charger automatically initiates another four hours in float charge.

NOTICE

If the battery voltage falls to the re-bulk voltage (12.1 VDC on 12-volt models, 24.2 VDC on 24-volt models, and 48.4 VDC on 48-volt models) or lower, the unit will begin another bulk charge.

***** *These settings in the MS Series are changeable and leave the factory with default values (see Table 3-2, Inverter/Charger Default Values). These default values are adequate for most installations, however, if you determine that some of the values need to be changed for your particular system, a remote control may be purchased to adjust these settings.*

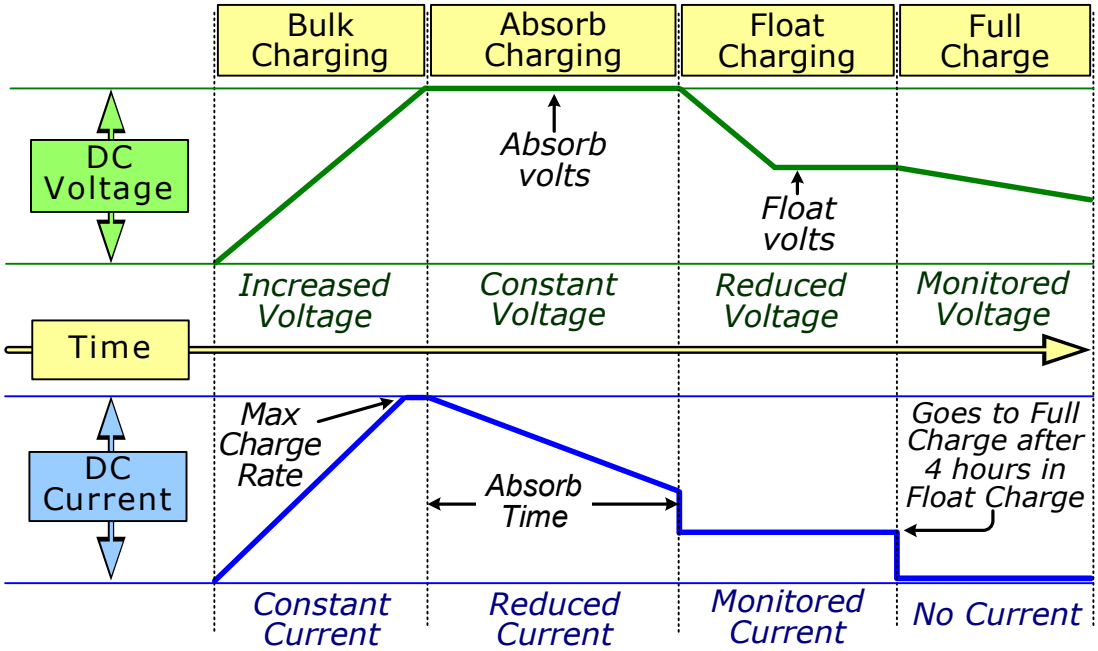

Figure 3-7, Automatic 4-Stage Charging Graph

3.4 Transfer Time

While in Standby mode, the AC input is continually monitored. Whenever AC power falls below the VAC dropout voltage (80 VAC, default setting), the inverter automatically transfers back to Inverter mode with minimum interruption to your appliances—as long as the inverter is turned on. The transfer from Standby mode to Inverter mode occurs in approximately 16 milliseconds. While the MS Series is not designed as a computer UPS system, this transfer time is usually fast enough to hold them up. However, the *VAC Dropout* setting has an effect on the ability of the loads to transfer without resetting. The lower this setting, the longer the effective transfer will be and therefore, the higher the probability for the output loads to reset. This occurs because the incoming AC voltage is allowed to fall to a level that is so low that when the transfer does occur, the voltage on the inverter's output has already fallen low enough to reset the loads.

The disadvantage of a higher *VAC Dropout* setting is that smaller generators (or large generators with an unstable output) may nuisance transfer. This commonly happens when powering loads that are larger than the generator can handle—causing the generator's output voltage to constantly fall below the inverter's input VAC dropout threshold.

NOTICE

When switching from Inverter mode to Standby mode, the inverter waits approximately 15 seconds to ensure the AC source is stable before transferring.

3.5 Optional Battery Temperature Sensor Operation

The plug-in Battery Temperature Sensor (BTS) is used to determine the battery's temperature. This information allows the multi-stage battery charger to automatically adjust the battery charge voltages for optimum charging performance and longer battery life.

If the temperature around an installed BTS is below 77°F (25°C), the absorb and float charge voltage increases, and if the temperature around the BTS is higher than 77°F (25°C), the absorb and float charge voltage decreases. See Figure 3-8 to determine how much the charge voltage changes (increases or decreases) depending on the temperature reading of the BTS. For example, the nominal absorb charge voltage for a flooded battery at 77°F (25°C) on a 24-volt model is 29.2 VDC. If the battery temperature is 95°F (35°C), the absorb charge voltage would decrease to 28.6 VDC (29.2 VDC–0.6 change).

If a temperature sensor is NOT installed, the charge voltages are not automatically adjusted because of temperature, but are maintained at a temperature of 77°F (25°C). The life of the batteries may be reduced if they are subjected to large temperature changes when the BTS is not installed.

NOTICE

When the BTS is connected, the battery charger uses a value of –5mV/°C/ Cell from 0-50°C to change the charge voltage based on temperature.

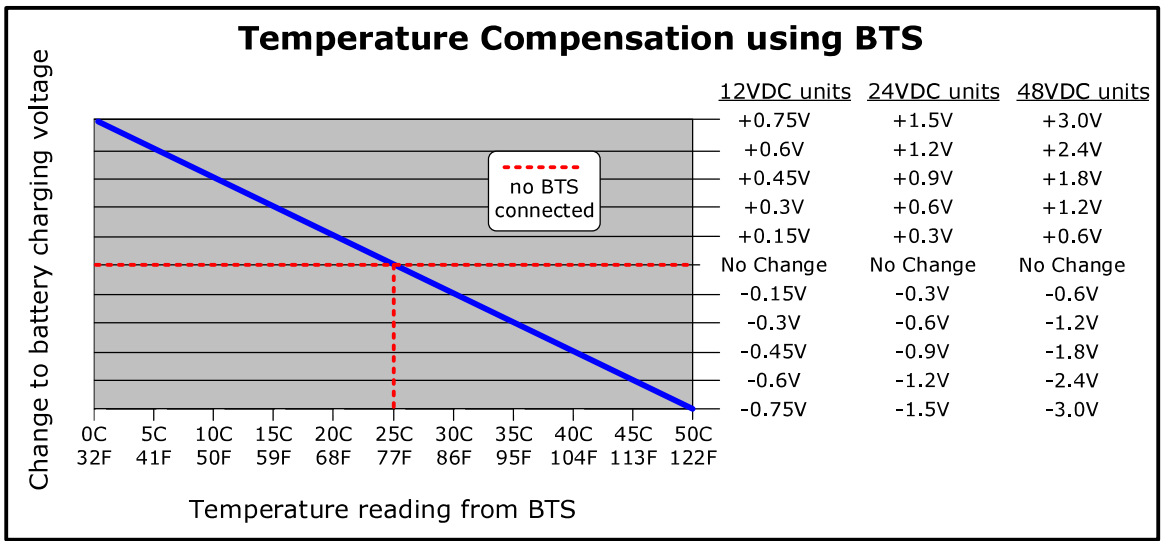

12VDC units	24VDC units	48VDC units
+0.75V	+1.5V	+3.0V
+0.6V	+1.2V	+2.4V
+0.45V	+0.9V	+1.8V
+0.3V	+0.6V	+1.2V
+0.15V	+0.3V	+0.6V
No Change	No Change	No Change
-0.15V	-0.3V	-0.6V
-0.3V	-0.6V	-1.2V
-0.45V	-0.9V	-1.8V
-0.6V	-1.2V	-2.4V
-0.75V	-1.5V	-3.0V

Figure 3-8, BTS Temperature to Charge Voltage Change

3.6 Protection Circuitry Operation

The inverter is protected against fault conditions and in normal usage it will be rare to see any. However, if a condition occurs that is outside the inverter's normal operating parameters, it will shut down and attempt to protect itself, the battery bank, and your AC loads. If there is a condition that causes the inverter to shut down, it may be one of the following conditions [also refer to the Troubleshooting section (Section 4.3) to help diagnose and clear the fault condition]:

- **Low Battery** – The inverter shuts off whenever the battery voltage falls to the LBCO (Low Battery Cut Out) level to protect the batteries from being over-discharged. After the inverter has reached the LBCO level and turns off, the inverter automatically restarts after one of the following conditions are met:
  1. AC Power is applied and the inverter begins operating as a battery charger.
  2. Battery voltage rises to the LBCI (Low Battery Cut In) level.

  Refer to Table 3-1 to determine the LBCO and LBCI levels for your inverter model.

- **High Battery** – In the event the battery voltage approaches the HBCO (High Battery Cut Out) level, the inverter automatically shuts down to prevent it from supplying unregulated AC output voltage. The inverter's status LED turns off when a high battery fault condition occurs. The inverter automatically restarts when the battery falls to the HBCI (High Battery Cut In) level. Refer to Table 3-1 to determine the HBCO and HBCI levels for your inverter model.

NOTICE

High battery voltage may be caused by excessive or unregulated voltage from the solar panels or other external charging sources.

- **Overload** – During inverter and standby operation, the inverter monitors the DC and AC current levels. In the event of a short-circuit or an overload condition for more than a few seconds, the inverter will shut down. To start operating after this fault, the inverter must be restarted (turned back on) once the inverter's AC loads are reduced/removed.
- **Over-temperature** – If internal power components begin to exceed their safe operating temperature level, the inverter shuts down to protect itself from damage. The inverter's status LED turns off to indicate the over-temperature fault condition. The inverter automatically restarts after the unit cools down.
- **Internal Fault** – The inverter continually monitors several internal components and the processor communications. If a condition occurs that does not allow proper internal operation, the inverter shuts down to protect itself and the connected loads. The inverter needs to be reset to start operating—refer to Section 4.4 for information on resetting the inverter.

Table 3-1, Inverter Battery Turn On/Off Levels

Inverter Battery Turn ON/OFF Levels	Inverter Model				
	MS2000/ MS2012	MS2812	MS2024	MS4024	MS4048
HBCO	>16.9 VDC	>16.9 VDC	>33.8 VDC	>33.8 VDC	>67.6 VDC
HBCI	16.6 VDC	16.6 VDC	33.2 VDC	33.2 VDC	66.7 VDC
LBCI	12.5 VDC	12.5 VDC	25.0 VDC	25.0 VDC	50.0 VDC
LBCO* (1 min. delay)	10.0 VDC (9–12.2 VDC)	10.0 VDC (9–12.2 VDC)	20.0 VDC (18–24.4 VDC)	20.0 VDC (18–24.4 VDC)	40.0 VDC (36–48.8 VDC)
LBCO (immediate)	8.5 VDC	8.5 VDC	17.0 VDC	17.0 VDC	34.0 VDC

*adjustable with remote control

3.7 Inverter Startup

Power ON/OFF Switch – The inverter can be turned on and off by lightly pressing and releasing the Power ON/OFF switch on the front of the inverter (Figure 3-9). When the inverter is first connected to the batteries, or when its automatic protection circuit has turned the inverter off, the ON/OFF switch will need to be pressed to start the unit (or reset per Section 4.4). Once the inverter has been turned on, pressing the Power ON/OFF switch alternately turns the inverter on and off.

WARNING

The Power ON/OFF control switch does not turn on or off the charger feature, or remove pass-thru power. If AC power (utility or generator) is connected and qualified on the AC input, this AC power will also be available on the AC output and is not controlled by the Power ON/OFF switch.

Status LED Indicator – The status indicator is a green LED (Light Emitting Diode) that provides information on the operational mode of the inverter. Watch this indicator (Figure 3-9) for at least 10 seconds to determine the inverter's operational condition from the information below:

- **Off** – Indicates the inverter is off—there is no AC power (inverter, utility, or generator) at the inverter's output terminals. If the LED stays off after pressing the ON/OFF switch, there is a fault condition (such as low battery, high battery, overload, over-temperature or an internal fault). Refer to the Troubleshooting section to help diagnose/clear any fault condition.
- **Slow Flash** (blinks on for 4 seconds, then off for 4 seconds) – Indicates the batteries are float charging and the inverter is in Standby mode (any external AC power connected to the inverter's input is passing through the inverter and powering the inverter's AC loads).
- **Medium Flash** (blinks on once every two seconds) – indicates the inverter is Inverting, using energy from the battery and providing full power to the connected loads.
- **Fast Flash** (blinks on once every second) –
  When AC power is not connected to the inverter's input: Indicates the inverter is Searching—conserving power and waiting for a load to be turned on that meets or exceeds the *Search Watts* parameter (5 watts = default setting).
  When AC power is connected to the inverter's input: Indicates absorb charging, and the inverter is in Standby mode (the external AC power that is connected to the inverter's input is passing through the inverter and is powering the AC loads connected to the inverter's output).
- **Very Fast Flash** (blinks on/off very quickly—flutters) – Indicates the inverter is in EQ charge mode (requires remote to enable), or the inverter is continuously in reset. If a remote was not used to enable the equalize charge, then the inverter is likely in reset. Refer to the Troubleshooting section to help diagnose/clear the fault condition.
- **On** (solid) – Indicates bulk charging, and the inverter is in Standby mode (the external AC power that is connected to the inverter's input is passing through the inverter and is powering the AC loads connected to the inverter's output).

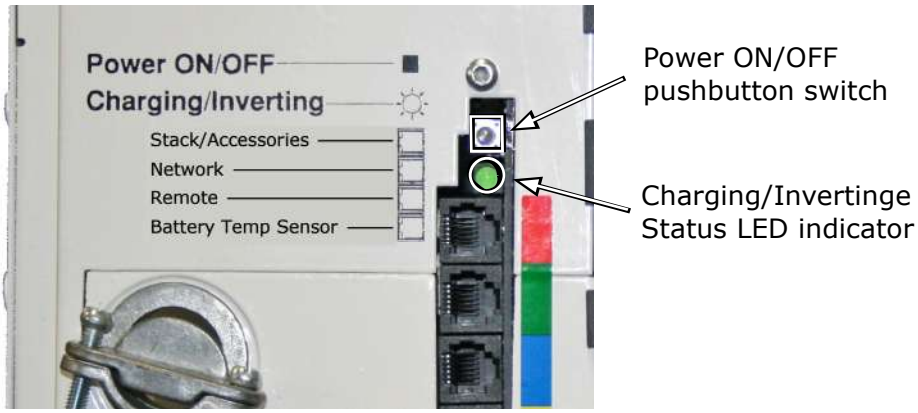

Figure 3-9, Power Switch and Status Indicator

3.8 Factory Default Values

Your MS Series inverter/charger uses default values for the adjustable settings (Table 3-2) that are adequate for most installations. If some of your operating parameters need to be changed from the default values, an optional remote control can be used to make those changes. To help you determine if you need a remote display, information on the inverter/charger settings that can be changed is provided below. The settings, once programmed, are saved in the remote's non-volatile memory and are preserved until changed—even if DC power to the inverter is lost (as long as the remote is connected). For information on the full range of settings for each function in your remote, refer to its owner's manual at **www.dmx-power.com**.

- **Shore Max/Input Amps:** This setting ensures the inverter AC loads receive the maximum current available from the utility or generator. When the total current used to power the AC loads and charge the batteries begins to approach the *Shore Max/Input Amps* setting, the current that was used for charging the batteries will automatically be reduced.
- **Search Watts:** This setting allows you to turn off the power-saving Search mode circuitry, or to adjust the power level at which the inverter will "wake up" and start inverting.
- **LowBattCutOut:** This setting determines when the inverter will turn off based on low battery voltage. The inverter turns off automatically after the battery voltage has been below this setting for more than one minute. This protects the batteries from over-discharge and the AC loads from unregulated power (brown-outs).
- **Batt AmpHrs/Absorption Time:** This setting allows the user to input the battery bank size in amp hours or to set the absorption time—which tells the charger how long to charge the batteries in the Absorb Charge stage.
- **Battery Type:** Sets the type of batteries being used in the system. This information tells the charger what voltage level to use to charge the batteries.
- **Charge Rate:** This setting can be used to turn off the charger, limit the amount of current that the charger can use (leaving more current available to power loads), or to ensure small battery banks are not overheated because of a charge rate that is too high.
- **VAC Dropout:** Sets the minimum AC voltage that must be present on the AC input before the unit transfers from Standby mode to Inverter mode. This protects the AC loads from utility outages and brown-outs.

Using a remote display also provides the following features: allows you control to enable an equalize charge for certain battery types, displays inverter/charger's operating status, and provides fault information for troubleshooting.

Table 3-2, Inverter/Charger Default Values*

Adjustable Settings	Default Values
Shore Max/Input Amps	30 Amps
Search Watts	5 Watts
LowBattCutOut	12v = 10 VDC (one min. delay), 8.5 VDC (no delay) 24v = 20 VDC (one min. delay), 17.0 VDC (no delay) 48v = 40 VDC (one min. delay), 34.0 VDC (no delay)
Batt AmpHrs/Absorption Time	600 AmpHrs (Absorb Time = 120 minutes)
Battery Type	Flooded – Liquid Lead Acid: 12V = Absorb 14.6 VDC, Float 13.4 VDC; 24V = Absorb 29.2 VDC, Float 26.8 VDC 48v = Absorb 58.4 VDC, Float 53.6 VDC
Charge Rate	100%
VAC Dropout	80 VAC

** These default values are without a remote connected. If a remote is connected, the remote settings are saved in the inverter—even if the remote is disconnected—until all power to the inverter is removed.*

3.9 Inverter Fan Operation

The inverter contains two internal cooling fans that are automatically controlled. The speed of these fans is determined either by the internal temperature of the inverter or by the load on the inverter. The inverter's fans will come on under the conditions listed below:

- Fans run full speed if the internal transistors (FETS) or the power transformer reaches 80°C degrees Celsius (176°F), or the inverter is running at 100% of its rated load.
- Fans run medium speed if the internal transistors (FETS) or the power transformer reaches 60°C (140°F), or the inverter is running at 50% of its rated load.
- Fans run low speed when the inverter is running at 25% of its rated load.

The fans shut down when none of the above conditions are met, or if the battery voltage is below 9.5V (12-volt systems)/19.0V (24-volt systems)/38V (48-volt models).

Whenever the inverter is first connected to the battery, the fans come on for about one second.

NOTICE

When the BTS is connected, the battery charger uses a value of –5mV/°C/ Cell from 0-50°C to change the charge voltage based on temperature.

3.10 Using a Remote with the MS Series Inverter

The MS Series inverter—when connected to a remote control display (i.e., ME-RC, ME-ARC)—has many advanced features. The inverter and remote communicate with each other to allow these advanced features to be set up or enabled. However, the remote may have a later/newer software revision than the inverter, so some of the features and functionality in the remote may not be available with your inverter.

Use the steps below to determine what remote menus/features are available with your inverter:

1. Obtain your inverter's software revision.

   Note: *To view the inverter's software revision level, push the TECH button on your remote and access the Revisions menu.*

2. Use the chart below to determine the inverter's compatibility level (L1, L2, L3 or L4) based on your inverter's software revision.

Table 3-3, Inverter Compatibility Level

INV/CHG Models	Level 1 (L1)	Level 2 (L2)	Level 3 (L3)	Level 4 (4)
MS2000 (–xxB)	≥ Rev 2.6	≥ Rev 3.6	≥ Rev 4.2	≥ Rev 5.4
MS2012 (–xxB)	≥ Rev 2.6	≥ Rev 3.6	≥ Rev 4.2	≥ Rev 5.4
MS2812	≥ Rev 2.6	≥ Rev 3.6	NA	≥ Rev 5.4
MS2024	NA	NA	NA	≥ Rev 5.0
MS4024	≥ Rev 2.6	≥ Rev 3.6	NA	≥ Rev 5.4
MS4048 (–20B)	NA	NA	NA	≥ Rev 5.7

3. After determining the inverter's compatibility level, refer to the remote's compatibility matrix (find it online at: www.dmx-power.com) to determine which remote features/settings you can use based on your inverter's compatibility level.

   Note: *If your inverter's compatibility level is the same or greater than the 'Inverter Model/Level Required' on the remote compatibility matrix on our website, then your inverter can support the device setting/feature you want. If your inverter does not have the required compatibility level for a feature/setting you want, contact DMX Power to determine if there is a software upgrade option for your inverter.*

4.0 Maintenance and Troubleshooting

The following information is provided to help you keep your MS Series inverter/charger in optimum operational condition.

4.1 Recommended Inverter and Battery Care

The MS Series inverter/charger is designed to provide you with years of trouble-free service. Even though there are no user-serviceable parts, it is recommended that every 6 months you perform the following maintenance steps to ensure optimum performance and extend the life of your batteries.

WARNING

Prior to performing any checks, switch OFF both the AC and DC circuits.

- Visually inspect the batteries for cracks, leaks, or swelling—replace if necessary
- Refer to your batteries' owner's manual and complete required maintenance per instructions
- Check and tighten all battery hold-down clamps (if applicable)
- Clean/tighten all battery terminals and connecting cables [10 to 12 ft lbf (13.6 to 16.3 N-m)]
- Check individual battery voltages (load test those that have a voltage difference of more than 0.3 VDC from each other)—replace if necessary
- Check all cable runs for signs of chafing—replace if necessary
- Check the inverter's cooling vents are clear of debris. Clean as needed. Do not use compressed air to clean vent as this will blow debris into the inverter.
- Check/tighten the inverter's internal AC terminal block connections [16 in-lbf (1.8 N-m)]

4.2 Storage for Mobile Installations

When placing the RV, boat or truck into storage, it is recommended that you perform the following to ensure the system is properly shut down (or properly configured for storage). This is especially important for maintaining the batteries.

- Perform the recommended maintenance steps listed in Section 4.1
- Fully charge the batteries
- Connect AC power (if available) and verify that the breaker to the inverter's input is switched ON (to allow battery charging)
- Verify the inverter is switched OFF
- Switch OFF all unnecessary AC and DC loads
- Disable the AGS (if installed) when the RV, boat, or truck is in a confined storage area

DANGER

If an AGS were to start and run the generator for an extended period of time in a confined area, a potentially fatal level of CO (Carbon Monoxide) could accumulate.

4.3 Troubleshooting

The MS Series inverter/charger is simple to troubleshoot. The following chart is designed to help you quickly pinpoint the most common inverter failures.

Table 4-1, Basic Troubleshooting

Symptom	Possible Cause	Recommended Solution
No output power. Inverter LED is OFF	Inverter is switched OFF	Switch the inverter ON.
	Battery voltage is too low. The battery voltage level has dropped below the Low Battery Cutout (LBCO) set-point for more than one minute.	Check fuses/circuit-breakers and cable connections. Check battery voltage at the inverter's terminals. Your batteries may need to be charged, this fault condition will automatically clear when the battery voltage exceeds the LBCI voltage.
	The battery voltage too high. The inverter automatically resets and resumes operation when the battery voltage drops to the HBCI voltage or lower.	This usually only occurs when an additional charging source (alternator, solar panels, or other external charging sources) is used to charge the battery bank. Reduce or turn off any other charger to the inverter batteries to allow the voltage level to drop.
	Over-temperature condition: The internal temperature of the inverter has risen above acceptable limits; caused by loads too great for the inverter to operate continuously, or by lack of ventilation to the inverter. Once cooled, unit will automatically reset and resume operation.	Reduce the number of electrical loads that you are operating, this will avoid a repeat over-temp shutdown if the cause was too many loads for the ambient conditions.
		Check ventilation around the inverter, ensure cool air is available to pass-through the inverter (refer to the ventilation requirements in Section 2.1.3).
	AC overload condition: The inverter has turned off because the connected loads are larger than the inverter's output capacity, or the output wires are shorted.	Reduce the AC loads connected to the inverter, or remove all AC output wiring and restart the inverter.
	Internal fault: This fault occurs when an internal fault is detected.	To clear this fault, an inverter reset is required. Remove DC power to the inverter, or press and hold down the power switch on the inverter for 15 seconds (until the green Status LED comes on). If this fault does not clear, the unit will need to be serviced.
No output power. Green LED flashing. Inverter is reset.	Unit is in Search mode, which means load is too small for Search mode circuit detection.	Turn on a load greater than 5 watts to bring inverter to full output power, or turn off Search with remote.
Low output or surge power. Green LED is flashing.	Loose or corroded battery cables.	Clean and tighten all cables.
	Low batteries.	Recharge or replace batteries.
	Loose AC output connections.	Tighten AC output connections.
	Battery cables are the wrong length or gauge.	Verify recommended cable lengths and gauges from the manual. Replace cables as necessary.
Low charging rate when connected to AC power.	Charge rate set too low.	Adjust charge rate or *SHORE* settings on remote.
	Low AC voltage (<90 VAC).	Check AC input wiring.
Low charging rate when using a generator.	Generator output is too low to power both load and charger.	Reduce the load, increase the generator's RPMs.
		Check the *SHORE* + settings (if remote connected).
Charger does not charge.	Loose or corroded battery cables.	Clean and tighten battery cables.
	Defective batteries.	Replace batteries.
	Wrong charger settings.	Adjust the charger settings, ensure the unit is not in charger standby.
	Wrong AC input voltage.	Verify proper AC input voltage and frequency.
While charging, the DC charge voltage is higher or lower than expected.	If the Battery Temperature Sensor (BTS) is installed, the DC voltage will increase or decrease depending on the temperature around the BTS.	This is normal; see Section 3.5 (Battery Temperature Sensor Operation) for more information.

4.4 Resetting the Inverter

Under some fault conditions (e.g., an internal fault), the inverter will need to be reset. Ensure all AC power (utility, generator, shorepower) is removed from the inverter's input before resetting.

CAUTION

If AC is connected while performing an inverter reset, damage may occur.

4.4.1 Performing an Inverter Reset

To perform an inverter reset (also known as a "soft reset"):

1. Press and hold the Power ON/OFF pushbutton (see Figure 4-1) for approximately fifteen (15) seconds until the Charging/Inverting Status LED comes on and flashes rapidly.
2. Once the rapid flashing has begun, release the Power ON/OFF pushbutton. The Status LED will go off after the pushbutton is released.
3. After the inverter reset is completed, press the ON/OFF pushbutton to turn the inverter on.

If the inverter reset fails, you will need to perform a power reset using the procedure below. In either case, if an internal fault does not clear, the inverter will require repair at an Authorized Service Center (ASC).

NOTICE

The Power ON/OFF pushbutton is a small momentary type switch which operates by lightly pressing and releasing. Be careful not to apply too much force when pushing or the switch might break.

1. Press and hold the Power ON/OFF pushbutton.

2. Watch the Charging/Inverting Status LED, after approximately 15 seconds it should come on and flash rapidly to indicate the inverter has reset. The Status LED will go off after the pushbutton is released.

Figure 4-1, Performing an Inverter Reset

4.4.2 Performing a Power Reset

To perform a power reset (also known as a "hard reset"):

1. Open the inverter's positive DC disconnect (or disconnect the positive battery cable to the inverter).

CAUTION

If removing all battery power (positive and negative) to the inverter, do not remove the DC negative connections to the inverter or any accessory until after all positive battery connections have been disconnected. This will prevent damage to the inverter or to any network connected accessory.

2. Ensure the inverter(s) and the remote are disconnected from all AC and DC power (the remote display will be blank).
3. After the inverter(s) has been disconnected from all power for 30 seconds, reconnect the inverter DC disconnects (or reconnect the positive battery cable) and resume operation.

NOTICE

If DC disconnects are not used, there may be a momentary spark when the positive battery cable is connected to the inverter's terminal. This is normal and indicates that the inverter's internal capacitors are being charged.

Appendix A – Specifications and Optional Equipment

A-1 Inverter/Charger Specifications

Models	MS2000/12 MS2012 (-15/-20B)	MS2812	MS2024	MS4024	MS4048 MS4048-20B
Inverter Specifications					
Input battery voltage range	9.0 to 16.8 VDC		18.0 to 33.6 VDC		36.0 to 67.6 VDC
Absolute maximum DC input	25 VDC		35 VDC		
AC output voltage accuracy	120 VAC ±5% (≤ continuous power)				
Output frequency and accuracy	60 Hz ± 0.1 Hz				
Total Harmonic Distortion (THD)	< 5%				
Continuous power output (at 25°C)	2000 VA	2800 VA	2000 VA	4000 VA	4000 VA
Continuous AC output current	17 A	23 A	17 A	33 A	
1 msec surge current (amps AC)	50	70	75	120	
100 msec surge current (amps AC)	33	40	37	82	72
5 sec surge power (real watts)	3300	3900	2850	5800	8500
30 sec surge power (real watts)	3100	3800	2750	5400	5750
5 min surge power (real watts)	2800	3200	2700	4900	5250
30 min surge power (real watts)	2200	3000	2200	4500	4750
Maximum continuous input current	267 ADC	373 ADC	133 ADC	267 ADC	133 ADC
Inverter efficiency (peak)	90.6%	90%	86%	93.7%	94.0%
HBCO/HBCI (High Battery Cut Out/In)	16.8/16.5 VDC		33.6/33.0 VDC		67.6/66.7 VDC
LBCO/LBCI (Low Battery Cut Out/In)	9.0 (adj)/12.5 VDC		18.0 (adj)/25.0 VDC		36.0 (adj)/50.0 VDC
AC Relay transfer time (minimum)	16 msec				
Power consumption – searching	<8 watts				
Power consumption – inverting (no load)	25 watts	30 watts	25 watts		
Output waveform	Pure Sine Wave				
Charger Specifications					
Continuous charger output at 25°C	100 ADC	125 ADC	60 ADC	105 ADC	60 ADC
Input current for continuous rated output	15 AAC	18 AAC	7.9 AAC	29 AAC	30 AAC
Charger efficiency	85%				
AC input range (frequency/voltage)	50 to 70 Hz/ 60 to 140 VAC (120 VAC nominal)				
Power factor	> 0.95				
General Features and Capabilities					
Transfer relay capability	30AAC max. each input (30AAC total on MS2000 models, 60AAC total on all other models)**				
Five-stage charging capability	Bulk, Absorb, Float, Equalize (requires remote), and Battery Saver™				
Battery temperature compensation	Standard with available temp sensor connected (battery temp 0 – 50°C)				
Internal cooling	0 to 120 cfm variable speed drive using dual 92 mm brushless DC fan				
Overcurrent protection	with two overlapping circuits				
Over-temperature protection	on transformer, MOSFETS, and battery				
Corrosion protection	PCB's conformal coated, powder coated chassis/top, and stainless steel fasteners				
Safety listings	ETL listed to UL/cUL 458, CSA C22.2 No. 107.1-01, and meets KKK-A-1822E std.				
Branch-rated output circuit breakers	Optional on MS2000 (15 or 20 amp breakers) or MS2012 (15 or 20 amp breakers)				
Environmental Specifications					
Temperature (Operating/Non-operating)	-20°C to +60°C (-4°F to 140°F)/-40°C to +70°C (-40°F to 158°F)				
Operating humidity	0 to 95% RH non-condensing				
Physical Specifications					
Unit dimensions (length x width x height)	13.75" x 12.65" x 8.0" (34.9 cm x 32.1 cm x 20.3 cm) [Height on MS2000 models is 7.0"/17.8 cm]				
Shipping dimensions (L x W x H)	19" x 17" x 13" (48.3 cm x 43.2 cm x 33 cm)				
Mounting	Shelf or wall (vents not allowed to face downward unless ME-CB or MMP/MP is installed)				
Unit weight	42 lb (19.1 kg)	55 lb (24.9 kg)	41 lb (18.6 kg)	55 lb (24.9 kg)	55 lb (24.9 kg)
Shipping weight	48 lb (21.8 kg)	62 lb (28.1 kg)	49 lb (22.2 kg)	62 lb (28.1 kg)	62 lb (28.1 kg)
Max operating altitude	15,000' (4570 m)				

** The pass-thru capability on each leg of the – 15B and – 20B models is limited by the output breaker size on each output.

Specifications @ 25°C – Subject to change without notice.

A-2 Inverter Efficiency

The following curves are plotted to show the MS Series' efficiency over the full power range and is displayed as a percentage. This graph represents the inverter's efficiency while operating resistive loads. Motors and other inductive loads run less efficiently due to the impact of power factor losses.

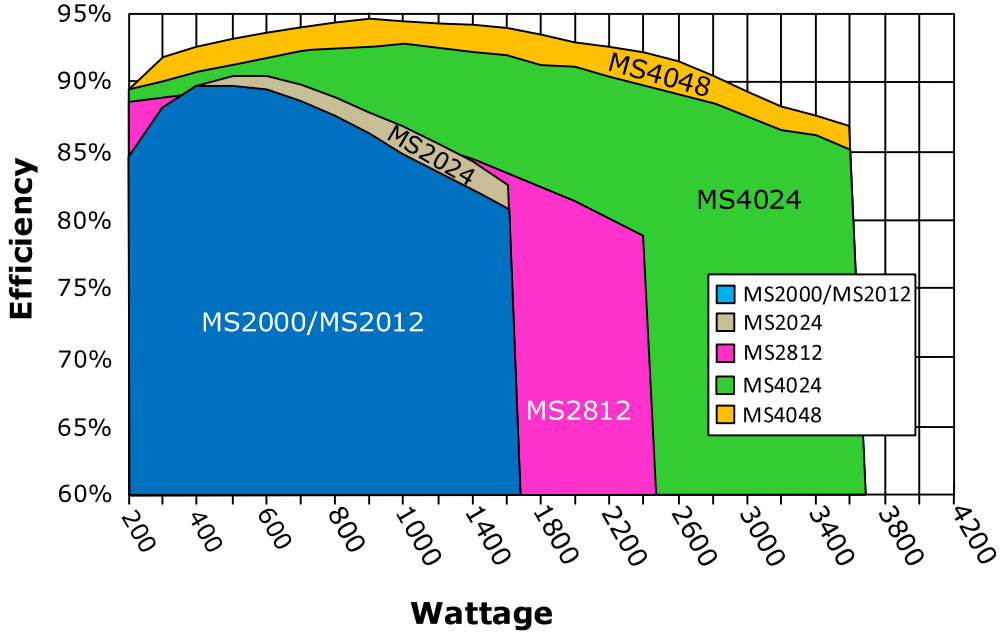

Figure A-1, MS Series Efficiency Chart

A-3 AC Input Voltage to Output Charge Amps

Figure A-2 shows the expected charger output capability of the MS Series. The maximum charge current is dependent on the AC input voltage and the inverter battery voltage. ***Note:*** *The output charger current shown is with the inverter battery voltage at nominal (i.e., 25.2v for MS4024).*

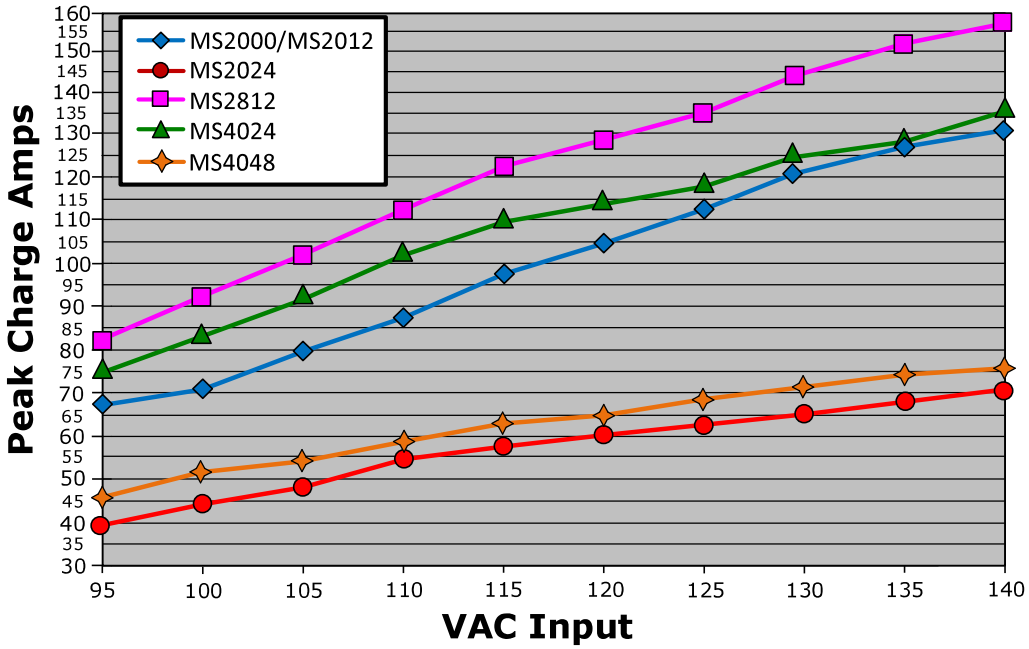

Figure A-2, MS Series VAC Input to Charge Amps

A-4 Temperature and Inverter Output

The following curves are plotted to show the MS Series inverters' continuous output power at different ambient temperatures.

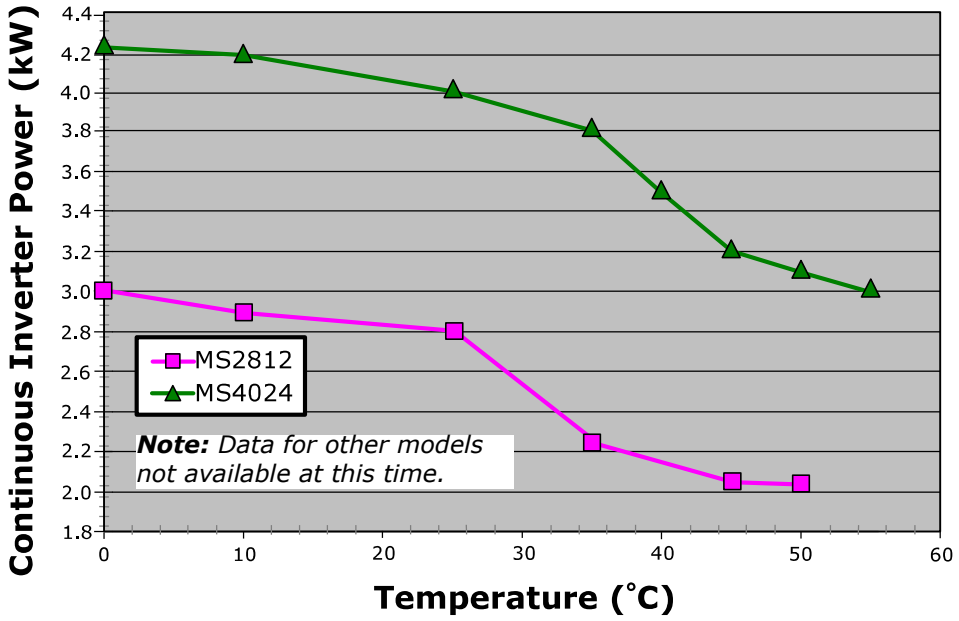

Figure A-3, Temperature to Continuous Inverter Output Power

A-5 Temperature and Charger Output

The following curves are plotted to show the MS Series chargers' continuous output current as the ambient temperature rises.

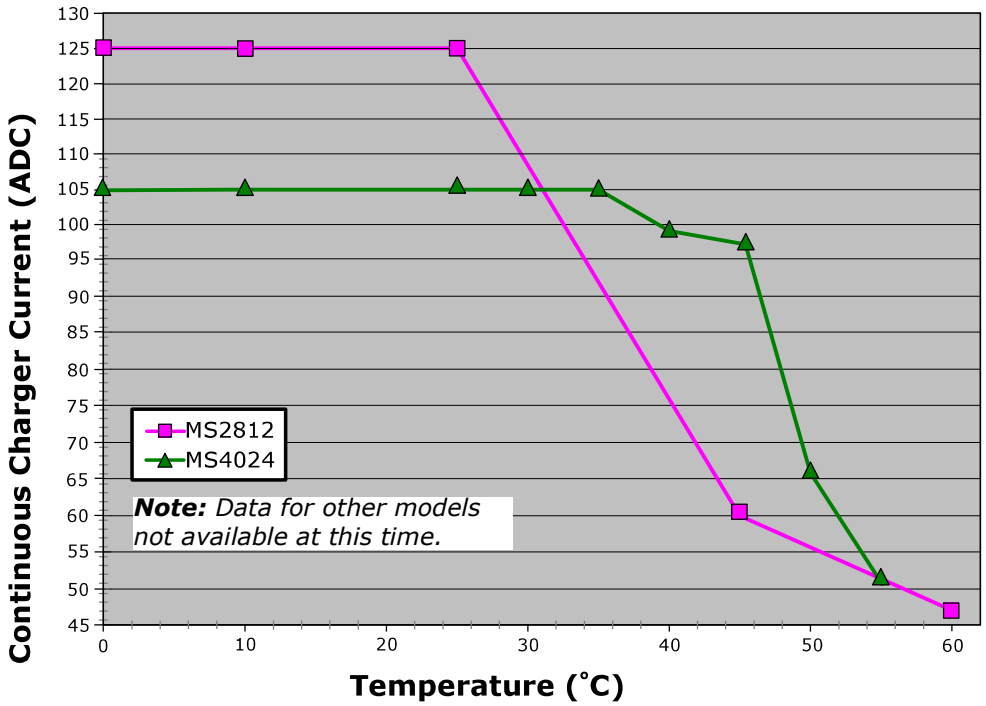

Figure A-4, Temperature to Continuous Charger Output Current

A-6 Optional Equipment and Accessories

For a complete listing of all accessories available for your new MS inverter, see our website or contact our sales team.

Appendix B – Battery Information

B-1 Battery Location

Periodic maintenance (i.e., checking connections, cleaning, watering) on batteries is required. Locate the batteries in an accessible location to perform this maintenance.

Batteries must be mounted in a clean, dry, ventilated environment where they are protected from high and low temperatures. The battery bank should be located as close to the inverter as possible without limiting access to the inverter's disconnects. Longer battery cable runs tend to lose efficiency and reduce the overall performance of an inverter.

To ensure optimum performance, a ventilated battery enclosure is recommended. Two feet of clearance above the batteries is recommended for access to the battery terminals and removable caps (lead acid battery types).

⚠WARNING

Be very careful when working around batteries, they can produce extremely high currents if they are short-circuited. Read the important safety instructions at the beginning of this manual and the precautions from the battery supplier before installing the inverter and batteries.

⚠WARNING

Do not mount the batteries beneath the inverter (or in the same compartment). Batteries emit corrosive fumes which could damage the inverter's electronics. Never locate dedicated batteries near a vehicle/ home fuel tank containing gasoline or propane

B-2 Battery Types

Batteries are available in different sizes, amp-hour ratings, voltage and chemistries. They are also available for starting applications (such as an automobile starting battery) and deep discharge applications. Only the deep cycle types are recommended for inverter applications; using a starting battery in an inverter (deep cycle) application will greatly shorten their useful life. Choose the batteries best suited for the inverter installation and cost. Use only the same battery type for all batteries in the bank. For best performance, all batteries should be from the same lot and date. This information is usually printed on a label located on the battery.

⚠CAUTION

If a BTS is in use with inverter and the battery type is switched to lithium, the BTS must be disconnected from the inverter. If the BTS is left plugged in to the inverter the batteries will be damaged.

B-3 Battery Temperature

Battery performance of lead-acid type batteries is greatly affected by extreme temperatures. When a lead-acid type battery is cold, its effective amp-hour capacity is reduced. When determining the battery requirements needed for the inverter system, realize that the battery capacity will be reduced if they will be installed in a climate where extremely cold temperatures are expected. In this type of environment, the batteries should be located in a heated area. At the minimum, the batteries should be installed in an insulated enclosure; which will keep the batteries warmer as they are being charged.

The battery bank should also be protected from high temperatures, which will shorten battery life. In high heat situations the battery room/enclosure should be ventilated to bring in cooler air and exhaust the hotter air. The performance of the battery bank/inverter system will substantially increase by monitoring and preventing extreme temperatures around the batteries.

B-4 Battery Bank Sizing

The size of the battery bank determines how long the inverter will power the AC loads without recharging. The larger the battery bank, the longer the run time. Size your battery bank to the systems AC load requirements and length of time required to run from the batteries. In general, the battery bank should not be discharged more than 50%. For lithium batteries, a deeper discharge of around 80% is often acceptable Additional DC charging devices such as solar, wind, hydro, etc., can provide longer run times by recharging the batteries in the absence of AC utility or generator power.

NOTICE

For the MS Series inverter/charger to perform optimally, a minimum battery bank of 200 AH is recommended for moderate loads (<1000W) and greater than 400 AH for heavy loads (≥1000W).

B-5 Battery Bank Sizing Worksheet

Complete the steps below to determine the battery bank size required to power your AC loads:

1. Determine the daily power needed for each load

a) List all AC loads required to run; and
b) List the Watt-Hours for each load (see Table C-1 for common loads/wattage); and
c) Multiply by how many hours per day (or a fraction of an hour) each load will be used; and
d) Multiply by how many days per week you will use the listed loads; and
e) Divide by seven = **Average Daily Watt-Hours Per Load**.

Average Daily Watt-Hours Per Load				
AC load	**Watt-Hours**	**(x) hours per day**	**(x) days per week**	**(÷7) = total power**

2. Determine the total power needed each day for all the loads.

- Add *Average Daily Watt-Hours Per Load* together = **Total Daily Watt-Hours**.

Total Daily Watt-Hours

3. Determine the battery amp-hour capacity needed to run all the loads before recharging.

- Divide the *Total Daily Watt-Hours* by the nominal battery voltage of the inverter (i.e., 12, 24 volts); and

(inverter battery voltage)
÷ ____ =

- Multiply this by how many days the loads will need to run without having power to recharge the batteries (typically 3 to 5 days of storage) = **Storage Amp-Hours**.

(days of storage)
x ____ =

4. Determine how deeply you want to discharge your batteries.

- Divide the *Storage Amp-Hours* by 0.2 or 0.5 to get the **Total Amp-Hours**:
  a) 0.2 = Discharges the batteries by 20% (80% remaining), this is considered the optimal level for long battery life; or
  b) 0.5 = Discharges the batteries by 50% (50% remaining), this is considered a realistic trade-off between battery cost and battery life.

Total Amp-Hours

Additional compensation:

Low battery temperature: If the batteries are installed in a location that will be exposed to low temperatures, the available output will be less. In these instances, you will need to determine the lowest temperature the battery bank will experience and multiply the *Total Amp-Hours* by the multiplier below.

Temperature	80F/27C	70F/21C	60F/15C	50F/10C	40F/4C	30F/-1C	20F/-7C
Multiplier	1.00	1.04	1.11	1.19	1.30	1.40	1.59

Inverter efficiency: When the inverter is used in a back-up power application, its efficiency will not be a large concern. However, if the inverter is the primary AC source for the calculated load, the *Total Amp-Hours* should be multiplied by 1.2 to factor in an average 80% inverter efficiency.

B-6 Battery Wiring Configurations

The battery bank must be wired to match the inverter's DC input voltage. In addition, the batteries can be wired to provide additional run time. The various wiring configurations are:

B-6.1 Series Wiring

Wiring batteries in series increases the battery bank's output voltage. A series connection combines each battery in a string until the total voltage matches the inverter's DC requirement. Even though there are multiple batteries, the capacity remains the same. In Figure B-1 below, two 6 VDC/200 AH batteries are combined into a single string resulting in a 12 VDC, 200 AH bank.

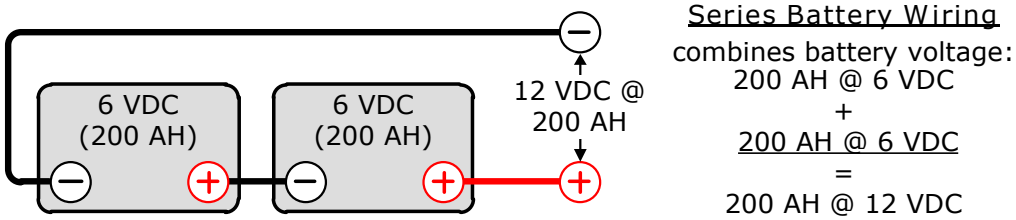

Figure B-1, Series Battery Wiring

B-6.2 Parallel Wiring

Wiring batteries in parallel increases the battery bank's amp-hour capacity, which allows the AC loads to operate for a longer time. A parallel connection combines the number of batteries in the string to increase overall battery capacity; however, the voltage remains the same. In Figure B-2 below, two 12 VDC/100 AH batteries are combined into a single 12 VDC, 200 AH battery bank.

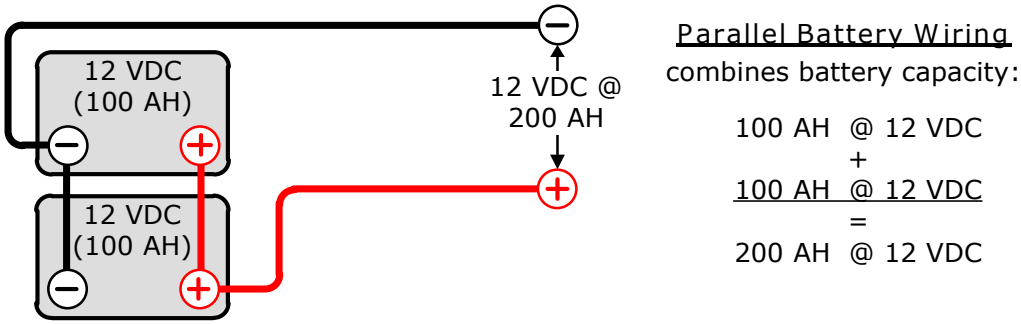

Figure B-2, Parallel Battery Wiring

B-6.3 Series-Parallel Wiring

A series/parallel configuration increases both voltage (to match the inverter's DC requirements) and amp-hour capacity (to increase run-time for operating the loads) using smaller, lower-voltage batteries. In Figure B-3 below, four 6 VDC/200 AH batteries are combined into two strings resulting in a 12 VDC, 400 AH battery bank.

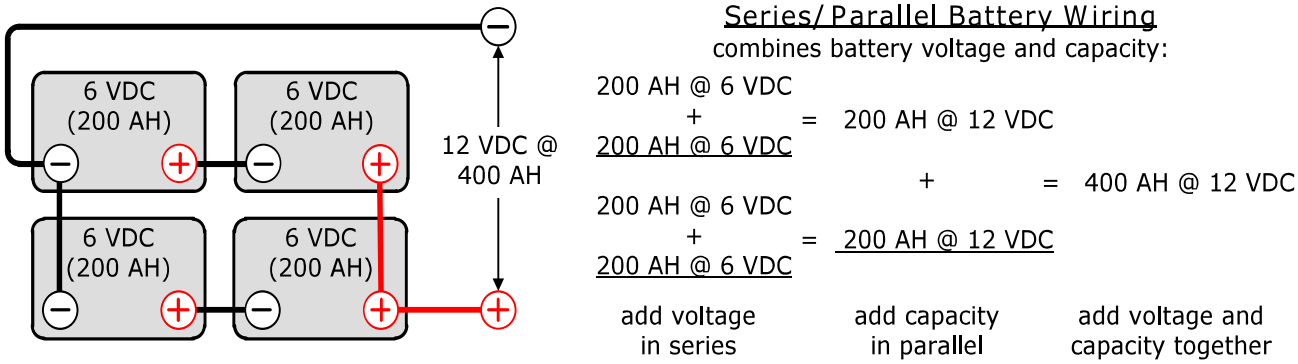

Figure B-3, Series-Parallel Battery Wiring

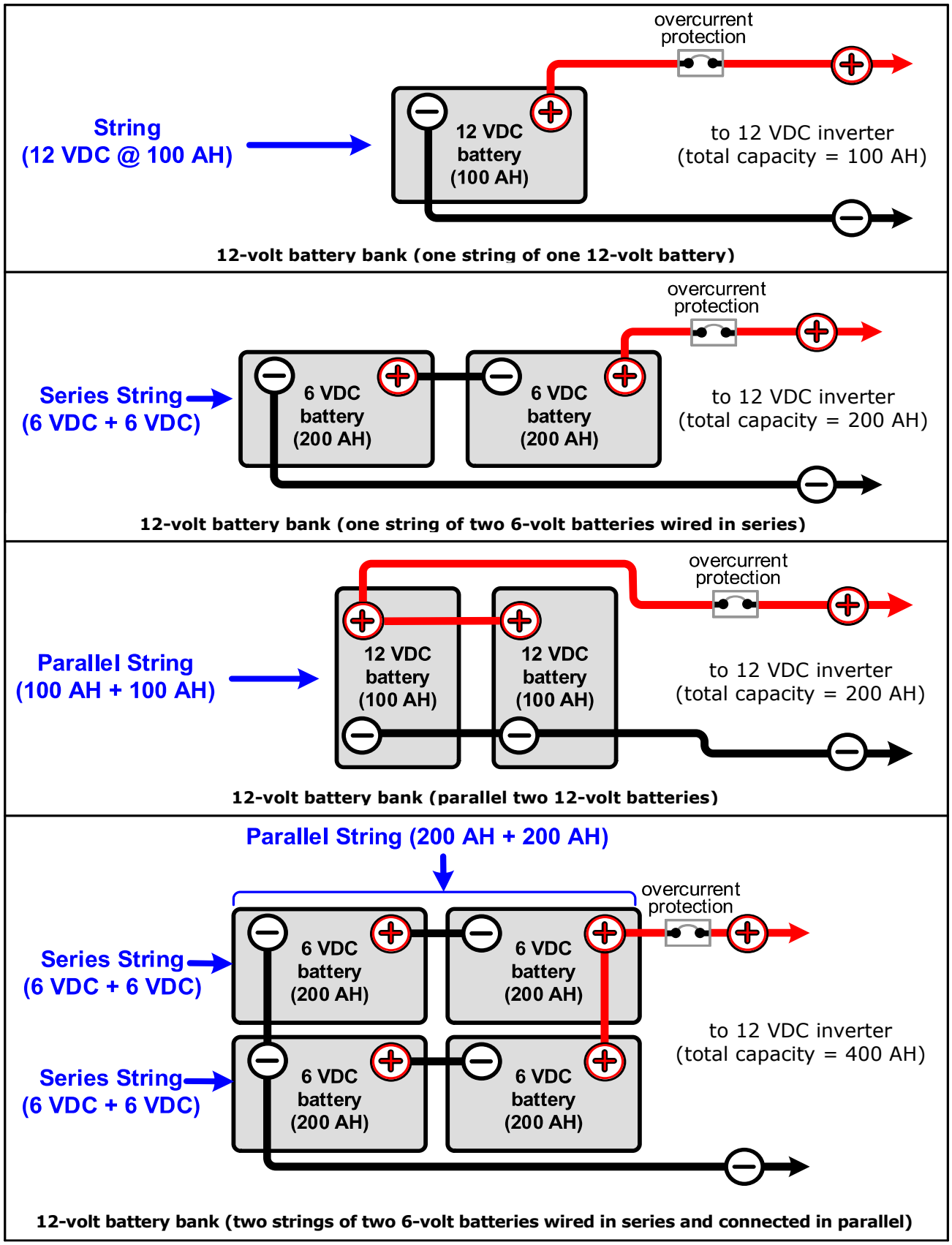

Figure B-4, Battery Bank Wiring Examples (12-volt)

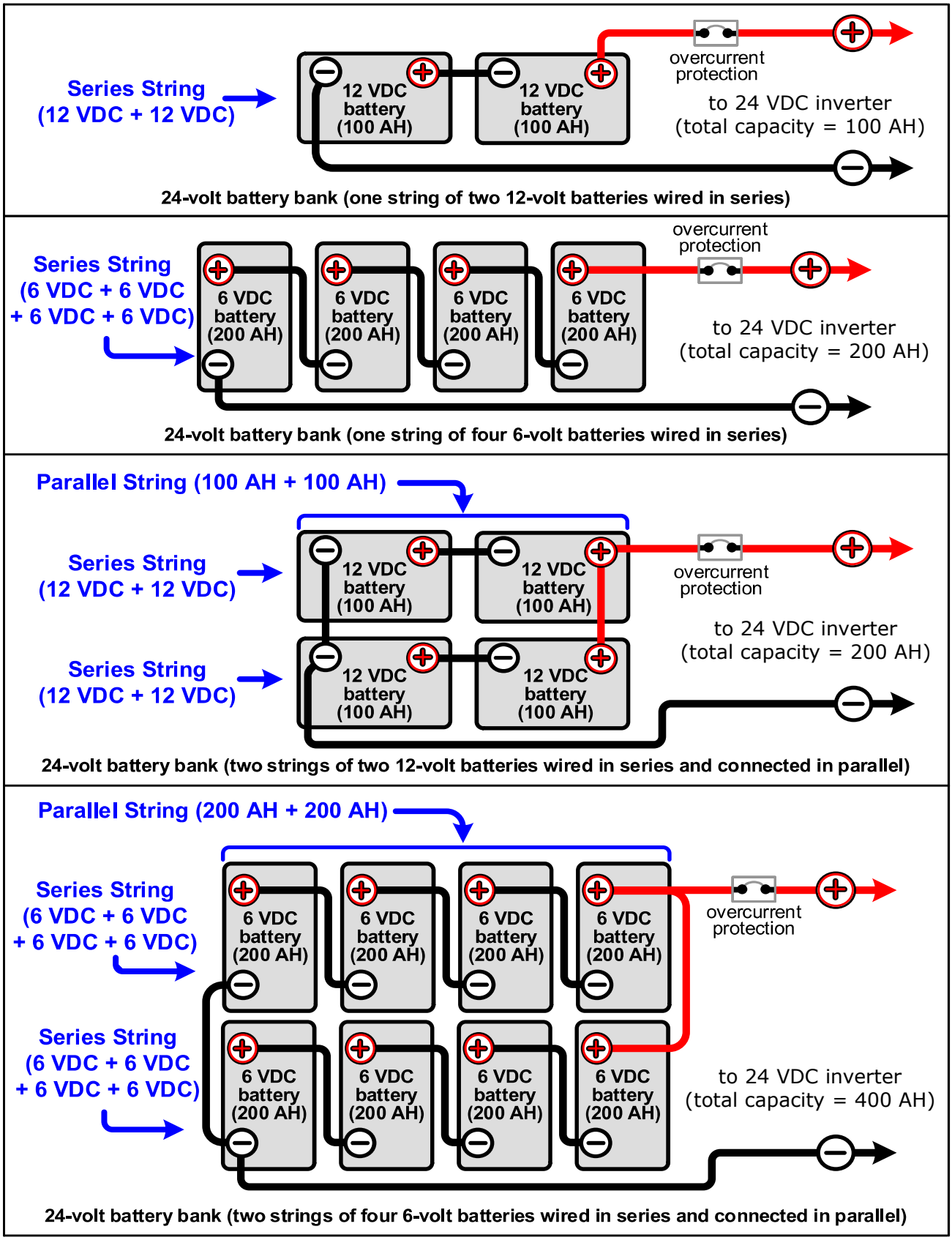

Figure B-5, Battery Bank Wiring Examples (24-volt)

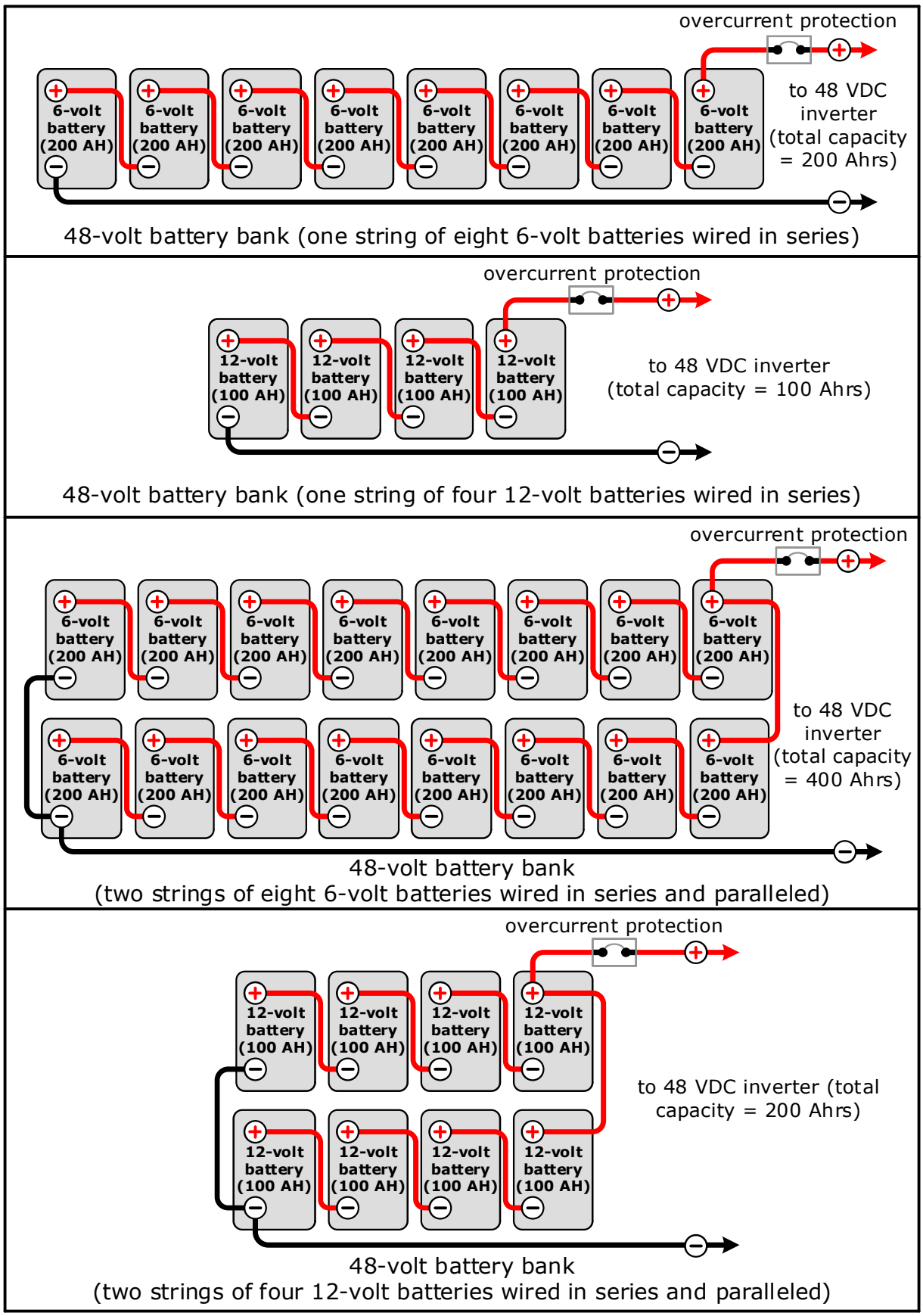

Figure B-6, Battery Bank Wiring Examples (48-volt)

Appendix C – Power Consumption & Output Waveforms

C-1 Appliances and Run Time

The MS Series inverter/charger can power a wide range of household appliances including small motors, hair dryers, clocks, and other electrical devices. As with any appliance using batteries for power, there is a certain length of time that it can run—this is called "run time." Actual run time depends on several variables including the size and the type of appliance, the type of batteries installed in your application, as well as the battery's capacity and age. Other factors such as the battery's state of charge and temperature can also affect the length of time your appliances can run.

Appliances (TVs, VCRs, stereos, computers, coffee pots, incandescent lights, and toasters) can all be successfully powered by your inverter. Larger electrical appliances, however, such as stoves, water heaters, etc., can quickly drain your batteries and are not recommended for this application.

All electrical appliances are rated by the amount of power they consume (see Table C-1). The rating is printed on the product's nameplate label, usually located on its chassis near the AC power cord. Even though it is difficult to calculate exactly how long an inverter will run a particular appliance, the best advice is trial and error. Your MS Series inverter has a built-in safeguard that automatically protects your batteries from over-discharge.

NOTICE

For optimum performance, a minimum battery bank of 200 AH is recommended for moderate loads (<1000W) and greater than 400 AH for heavy loads (≥1000W).

Table C-1, Typical Appliance Power Consumption

Device	Load	Device	Load	Device	Load
Blender	400W	Coffee Maker	1200W	Light (Flo)	10W
Computer	300W	Color TV	150W	Light (Inc)	100W
Drill	500W	Hair Dryer	1000W	Microwave	1000W
Hot Plate	1800W	Iron	1000W	Refrigerator	500W

C-2 Output Waveform

The inverter's output waveform is the shape of the wave that alternating current makes as its voltage rises and falls with time (see Figure C-1 below). The three basic output waveforms are:

- **Modified Sine Wave** – Also referred to as a "quasi sine wave" or a "modified square wave". This output looks like a one-step staircase and the waveform changes its width to continually provide the correct RMS output voltage regardless of the battery voltage. Most loads that run from a sine wave will also run from a modified sine wave. However, things such as clocks and furnace controllers may have trouble.
- **Sine Wave** – An AC waveform that looks like rolling waves on water. It rises and falls smoothly with time. The grid puts out a sine waveform. Any plug-in AC equipment will operate from a sine wave output inverter.
- **Square Wave** – The simplest AC waveform. Some types of equipment behave strangely when powered from a square wave inverter.

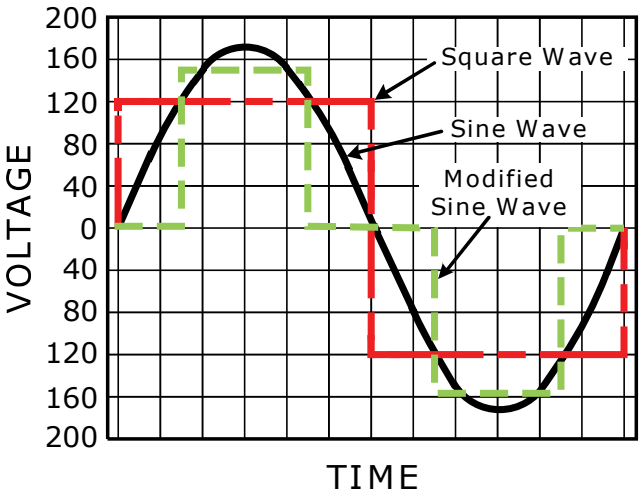

Figure C-1, AC Waveforms

Appendix D – Inverter/Charger Terminology

The following is a glossary of terms with which you may not be familiar. They appear in the various descriptions of inverter and battery charger operation.

Absorption Stage – In this second stage of three stage charging, the batteries are held at a constant voltage (the absorb voltage setting) and the battery is charged to its maximum capacity.

AC (Alternating Current) – Electrical current that varies with time (i.e., utility power). The rate at which the voltage changes polarity is the frequency in Hertz (Hz).

Ampacity – The ampacity of a wire is its current carrying capacity with reference to the cross-sectional area of the conductors, the temperature rating of the insulation and the ambient temperature.

Automatic Transfer Relay (inside the inverter) – An automatic switch that switches between Inverter and Standby mode depending on availability of AC input power. If AC is present, the unit will be a battery charger and pass power through the inverter. When the AC goes away, the unit becomes an inverter.

Bulk Charge Stage – The first stage in three stage charging. In this stage, a constant current is fed to the batteries and as they accept the current the battery voltage will rise.

CEC (Canadian Electrical Code) – The guidelines and acceptable practices for electrical installations in Canada.

Current (Amps) – The amount of electricity flowing through a conductor.

DC (Direct Current) – Electrical current that does not vary with time (i.e., battery voltage).

Deep Cycle – A deep cycle occurs when a battery is discharged to less than 20% of its capacity (80% depth-of-discharge).

Deep Cycle Battery – A battery designed to be routinely discharged to 20% of its maximum capacity without damage. This type of battery is recommended for use with an inverter system.

Derating – As an inverter (or charger) is used above its normal temperature, it's capacity to power loads (or charge) continuously is decreased.

Digital Volt Meter (DVM):

- **True RMS** – A voltmeter that incorporates a RMS converter to read true RMS for any waveform shape.
- **Averaging Type** – A voltmeter that requires a sine wave waveform shape to provide an accurate reading.

Efficiency – Usually given as a percentage, efficiency is the ratio of the output to the input. The efficiency changes with power output levels of any inverter.

Electrolyte – Typically a mixture of water and sulfuric acid that is used in lead-acid batteries; it is commonly referred to as battery acid.

Equalization – Controlled "overcharging" of the battery causing it to bubble and mix. This helps reduce stratification.

Float Stage – During the third stage of three stage charging, the voltage and current are reduced to a level that will trickle charge or maintenance charge the battery. This assures the battery remains fully charged even while sitting.

Fuse or Disconnect – When current exceeds a preset limit the fuse or disconnect will fail before the wiring or equipment it is protecting. Disconnects are also called circuit breakers. These are usually reset and can act as a switch to turn off power to equipment for servicing.

Grid (The grid) – Also called the utility grid, this refers to the public power distribution system.

Impedance – Slows the electrical flow of Alternating Current (AC).

LED (Light Emitting Diode) – A light made up of semi-conducting material.

Line Tie – Term used when the inverter is connected to public power or to the "grid" system.

Load(s) – An electrical item that draws power (i.e., lights, radio, refrigerator, etc.) to work.

Appendix D – Inverter/Charger Terminology

Locked Rotor Amps – The current drawn by an electric motor with the shaft or rotor stopped and locked in position. This can be used to determine if an inverter has enough surge current to start a motor. If the inverter is capable of producing more amperage than the locked rotor amps rating of a motor, it will most likely start the motor easily.

NEC (National Electric Code) – The guidelines and acceptable practices for electrical installations in the USA.

Off Grid – Not connected to public power in any way.

Pass Through Current – The amount of current the inverter can safely pass directly from the AC input to the AC output.

Photovoltaic (PV) – Solar powered.

Resistance (Ohms) – Slows the electrical flow of Direct Current (DC).

RMS (Root Mean Square) – A measure of AC voltage that provides the equivalent heating value across a resistor as would a DC source of the same voltage.

Sellback, or **Selling Back To The Grid or Utility-Interactive** – Some inverters have the capability to take energy stored in batteries, or from solar panels, and put it back into the utility grid. The local public utility company can compensate you for using this energy.

Shorepower – The process of providing shoreside electrical power to a boat while its main and auxiliary engines are turned off. The source for shorepower may be grid power from an electric utility company, or from an external remote generator.

Stacking (Not supported on MS models):

- **Series** – Two inverters operating together to produce twice the power and voltage of a single inverter. Required when operating 240 VAC loads and separate 120 VAC loads from either inverter.
- **Parallel** – Two inverters operating together to provide twice the continuous capacity on a single output circuit. Required when a single load is too large for one inverter.

Stratification – Over time, a battery's electrolyte (liquid) tends to separate. The electrolyte at the top of the battery becomes watery while at the bottom it becomes more acidic. This effect is corrosive to the plates.

Sulfating – As a battery discharges, its plates become covered with lead sulfate. During recharging, the lead sulfate leaves the plates and recombines with the electrolyte. If the lead sulfate remains on the plates for an extended period of time (over two months), it hardens, and recharging will not remove it. This reduces the effective plate area and the battery's capacity.

Temperature Compensation – Peak available battery voltage is temperature dependent. As ambient temperatures fall, the proper voltage for each charge stage needs to be increased. A Battery Temperature Sensor (BTS) automatically re-scales charge-voltage settings to compensate for ambient temperatures.

Voltage – The pressure that causes electrical flow in a circuit.

Watts – Measure of power output or utilization. Watts =Volts x Amps.

DMX Power

www.dmx-power.com