MAGNUM ENERGY

ME-AGS-S

Automatic Generator Start for Standalone Systems

Owner's Manual

DMX POWER

Disclaimer of Liability

The use of this manual and the conditions or methods of installation, operation, use, and maintenance of the ME-AGS-S (Auto Generator Start – Standalone) controller is beyond the control of DMX Power. Therefore, this company does not assume responsibility and expressly disclaims liability for loss, damage, or expense whether direct, indirect, consequential or incidental that may arise out of or be any way connected with such installation, operation, use, or maintenance.

Due to continuous improvements and product updates, the images shown in this manual may not exactly match the unit purchased.

Restrictions on Use

The ME-AGS-S may only be used in life support devices and systems with the express written approval of DMX Power. Failure of this inverter can reasonably be expected to cause failure of that life support device or system, or to affect the safety or effectiveness of that device or system. If the ME-AGS-S fails, it is reasonable to assume the health of the user or other persons may be endangered.

Copyright Notice

Copyright 2025 by DMX Power. All rights reserved. Permission to copy, distribute, and/or modify this document is prohibited without express written permission from DMX Power.

Document Information

Description – ME-AGS-S Owner's Manual
Part Number and Revision – 64-0004 Rev F
Date Published – July 2026

For the latest version of DMX documentation including this manual see the documentation menu on our website at: www.dmx-power.com

Contact Information

DMX Power
Phone (Toll-Free): 800-553-6418 or 651-653-7000
Technical Questions: support@dmx-power.com
Warranty or RMA: warranty@dmx-power.com
Web: www.dmx-power.com

Statement of Appreciation

Thank you from all of us at DMX Power for purchasing this ME-AGS-S controller.

At DMX Power, we are committed to providing you with quality products and services, and hope that your experience with us is pleasant and professional.

IMPORTANT PRODUCT SAFETY INSTRUCTIONS

This manual contains safety instructions that must be followed during the installation and operation of this product. Read all instructions and safety information contained in this manual before proceeding.

Safety Symbols

To reduce the risk of electrical shock, fire, or other safety hazard, the following safety symbols have been placed throughout this manual to identify dangerous situations and important safety instructions.

WARNING: Indicates that failure to take a specified action could result in physical harm to the user.

CAUTION: This symbol indicates that failure to take a specified action could result in damage to the equipment.

Info: This symbol indicates information that emphasizes or supplements important points of the main text.

Product Safety Alerts

WARNING:

- All electrical work must be performed in accordance with local, state, and federal electrical codes.
- This product is designed for indoor and compartment installation. Do not expose to rain, snow, moisture, or liquids of any type.
- Use insulated tools to reduce the chance of electrical shock or accidental short circuits.

WARNING: Severe personal injury, death, and equipment damage can result from operating the generator in a garage, building, or a confined space. The generator produces dangerous fumes when it is running. If the generator is installed in an RV, disable the AGS system to prevent the generator from starting when the RV is in a confined space.

WARNING: ENGINE EXHAUST GASSES CAN BE DEADLY. Install a reliable carbon monoxide alarm in your vehicle, building, or home before starting a generator or enabling the AGS. All engine exhaust contains carbon monoxide: an odorless, colorless gas that can cause severe personal injury/ death. Symptoms of CO poisoning:

- dizziness, headache or throbbing temples,
- weakness or muscular twitching,
- sleepiness or confusion, and nausea or vomiting

If you experience any of the above symptoms, get to fresh air immediately. If symptoms persist, seek medical attention. Shut down the generator and do not operate until the unit is inspected and repaired.

WARNING: With an AGS system installed, exhaust CO, electrical shock, and moving parts hazards are possible due to unexpected engine/generator starting. Disconnect the engine/generator starting battery cables or AGS connection to the engine/generator before working on the generator or any other electrical system powered by it.

- Remove all jewelry (such as rings, watches, bracelets, etc.) when installing or performing maintenance on your batteries and the inverter system.
- Always disconnect the batteries or energy source prior to installing or performing maintenance on your batteries and inverter system. Live power may be present at more than one point since an inverter utilizes both batteries and AC. Turning off the inverter may not reduce this risk. As long as AC power is connected, it will pass through the inverter regardless of the power switch on the inverter or the ON/OFF INVERTER pushbutton on the remote/router.
- Wear eye protection—such as safety glasses—when working with batteries.
- Never work alone. Always have someone near you when working around batteries.
- Never use old or untested batteries. Check each battery's label for age, type, and date code to ensure all batteries are identical.
- Batteries are sensitive to changes in temperature. Always install batteries in a stable environment.

Table of Contents

1.0 Introduction 1
1.1 ME-AGS-S Components/Features 2
1.1.1 AGS Remote Switch 2
1.1.2 AGS Controller 3
1.1.3 Communication Cable 4
2.0 Installation 5
2.1 Installation Requirements 5
2.2 Required Components and Tools 7
2.2.1 Supplied Components 7
2.2.2 Other Required Equipment and Materials 7
2.2.3 Required Tools 7
2.3 Mounting Procedure 7
2.3.1 Mounting the AGS Controller 7
2.3.2 Mounting the AGS Remote Switch 7
2.4 Connecting the Communication Cable 9
2.4.1 Communication Cable 9
2.5 ME-AGS-S Terminal Block Wiring 9
2.5.1 Power Connections (Terminals 3 and 4) 10
2.5.2 Generator Run Sense Connection (Terminal 2) 10
2.5.3 Gen Start/Stop Connections (Terminals 1, 5, 6, 7, & 8) 12
2.6 Common ME-AGS-S Generator Wiring Diagrams 13
3.0 Setup 19
3.1 Internal Settings 19
3.2 External Settings 21
3.3 AGS Functional Tests 23
3.3.1 Power-Up Test 23
3.3.2 Generator Wiring Test 23
4.0 Operation 24
4.1 AGS Controller LED Indicators 24
4.1.1 TEST Switch 24
4.1.2 STATUS LED Indicator 24
4.1.3 READY LED Indicator 24
4.2 Remote Switch Operation 25
4.2.1 Switch Positions 25
4.2.2 STATUS LED Indicator 26
4.3 AGS System Operation 26
4.3.1 Operational Notes 27
5.0 Troubleshooting 28
A-1 Appendix 29
A-1.1 Optional Accessories for the ME-AGS-S 29
A-1.2 Additional Magnum Equipment/Accessories 29

List of Figures

Figure 1-1, ME-AGS-S Remote Switch Features..... 2
Figure 1-2, ME-AGS-S Controller Features..... 4
Figure 1-3, ME-AGS-S Communications Cable 4
Figure 2-1, ME-AGS-S System Diagram 6
Figure 2-2, Controller Dimensions..... 8
Figure 2-3, Remote Dimensions..... 8
Figure 2-4, Communication Cable Connection..... 9
Figure 2-5, Communication Cable (Data Type)..... 9
Figure 2-6, Generator Run Sense Options 11
Figure 2-7, Wiring to the AGS Controller's Terminal Block.....13
Figure 2-8, Warning Label.....14
Figure 2-9, Two-wire Start Control 15
Figure 2-10, Three-wire Momentary Control 16
Figure 2-11, Three-wire Maintain Control 17
Figure 2-12, Three-wire Momentary Control (with Preheat) 18
Figure 3-1, Inside the AGS Controller 19
Figure 3-2, DC Voltage Settings.....19
Figure 3-3, External Settings.....21
Figure 4-1, Controller Front Panel Controls and Indicators.....25
Figure 4-2, Remote Switch Controls and Indicators 26

List of Tables

Table 3-1, GEN TYPE Settings.....20
Table 3-2, ME-AGS-S Default Settings 21
Table 5-1, Troubleshooting Guide.....28

1.0 Introduction

The Automatic Generator Start – Standalone version (**ME-AGS-S**) from DMX Power is designed as a standalone device. It will automatically start your generator based on low battery voltage and/or a high temperature condition.

Info: See Figure 3-1 for information on how to identify your ME-AGS's revision level.

Info: If you are using a DMX Power inverter/charger (provided with a network port) and a ME-RC or ME-ARC remote, use the **ME-AGS-N** (AGS – Network version) for full network capability of the AGS system.

This AGS is used to continuously monitor your battery system and/ or the surrounding area temperature, and to automatically start the generator when the battery requires charging and/or power is needed to run an air conditioner to cool down the surrounding area.

The temperature turn-on feature is useful in many applications. For example, if you have an RV (recreational vehicle) coach in a hot environment, the AGS monitors the coach temperature and turns on the generator to power the air conditioner. This allows you to leave pets and precious items in your coach while you are away—all the while knowing your coach will stay cool and comfortable. Even if you don't have pets, there's nothing better than returning to a nice cool coach while dry camping in hot weather. Plus, no more worrying about dead batteries.

The AGS system includes a controller with on-board adjustments and interfaces, and a user-friendly remote control switch. The controller provides the wiring interface for the battery bank and generator start/stop circuits. It has adjustments for setting the generator's run time, high temperature start, and low battery voltage start; and if needed, the *Clock* and *Quiet Time* adjustments can be set to comply with RV park/rest area nighttime low noise requirements. The remote switch allows testing and activating the AGS system, and provides a LED indicator to display AGS system status information.

This AGS is compatible with most AC or DC generators with either two-wire or three-wire start controls; such as Onan, Power Tech, Generac, Martin, Kohler, Honda, Westerbeke, Yamaha, and many others. For a list of generators that have been successfully used with the AGS (& their respective wiring diagrams), visit: www.dmx-power.com.

The standalone AGS is equipped with the following features:

- Compatible with 12, 24, or 48-volt systems
- Easily adjustable settings for run-time, low voltage, and high temperature start
- Quiet Time setting to prevent generator operation during nighttime hours

- Compatible with any inverter/charger-based system
- Compatible with most AC or DC generators with either two-wire or three-wire start controls
- TEST switch provides immediate confirmation of installation wiring
- Removable 8-port terminal block for easy wiring and power-down
- Front panel LED indicators for generator start/stop status and generator faults

1.1 ME-AGS-S Components/Features

The ME-AGS-S has the following components and features:

- AGS Remote Switch • AGS-S Controller • Communication cable

1.1.1 AGS Remote Switch

The AGS remote switch is the user interface display, and connects to the AGS controller using the supplied communications cable. Refer to Figure 1-1.

1 **Selector Switch** – allows the AGS system to be enabled/disabled for automatic generator operation and tested for correct wiring.
- *ENABLE* – activates the AGS to monitor voltage and/or temperature—uses this information to determine when to automatically start the generator.
- *OFF* – disables the AGS generator start/stop functions.
- *TEST* – initiates an automatic generator start/stop sequence for testing the generator's wiring and operation.

2 **STATUS Indicator** – this bi-color (green or red) LED indicator illuminates to provide information on AGS operation.

3 **Temperature Sensor (internal)** – location of the internal sensor used to start the generator (based on high temperature).

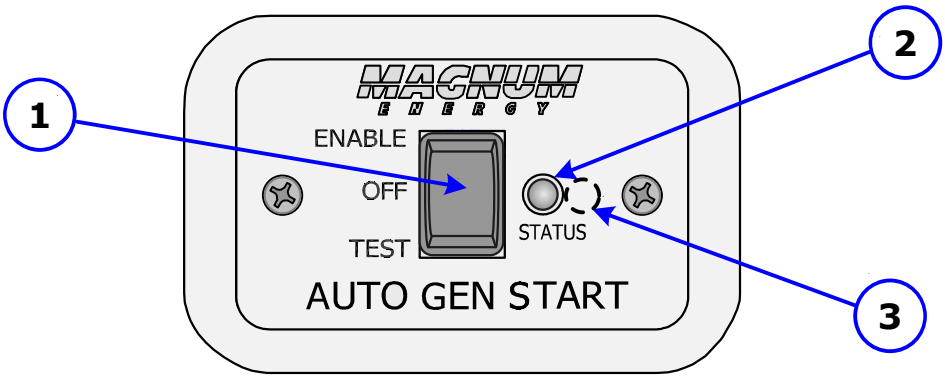

Figure 1-1, ME-AGS-S Remote Switch Features

1.1.2 AGS Controller

The AGS controller provides adjustments and the generator's wiring connections. Refer to Figure 1-2.

1. **AGS Adjustments (x5)** – The thumb wheel adjustments allow the AGS to be configured to your specific system preferences.
   - *RUN TIME HOURS* – determines the length of time the generator runs once it is automatically started.
   - *START TEMP °F* – allows you to enable and set a high temperature value that causes the generator to automatically start.
   - *START VOLTS DC* – allows you to enable and set a low battery voltage value that causes the generator to automatically start.
   - *CLOCK AM/PM* – determines the correct time, which in turn allows the Quiet Time feature to function correctly.
   - *QUIET TIME PM/AM* – used to prevent the generator from starting during specific hours.
2. **STATUS Indicator** – this bi-color (green or red) LED indicator illuminates to provide information on AGS operation.
3. **TEST Switch** – a momentary pushbutton switch that allows the AGS system to be tested for correct wiring and generator start/stop operation.
4. **Wiring Terminal Block** – this 8-port friction-fit connector powers the AGS and connects the generator's start/stop and run sense wires.
5. **Mounting Flange** – used to secure the inverter to a shelf or wall.
6. **READY Indicator** – this green LED indicator illuminates to indicate that the AGS is powered and the remote switch is connected.
7. **REMOTE Connection Port (purple label)** – a RJ12 port which provides the connection point for the remote switch.

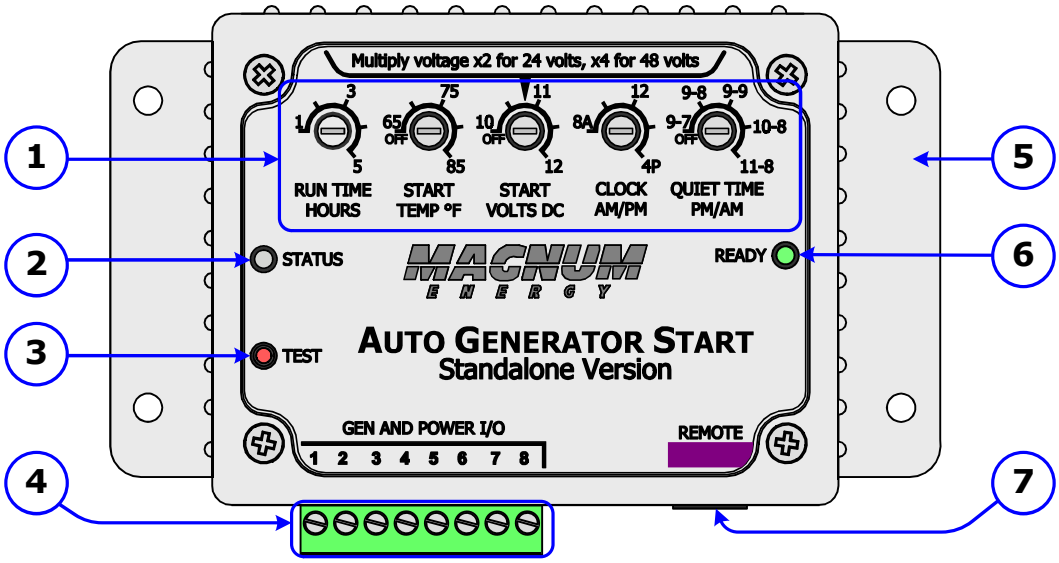

Figure 1-2, ME-AGS-S Controller Features

1.1.3 Communication Cable

A six-conductor, 25-foot RJ12 cable used to carry power and data between the remote and the AGS controller. See Figure 1-3.

Info: See Figure 2-5 for a close-up of the communications cable's conductor wiring.

Figure 1-3, ME-AGS-S Communications Cable

2.0 Installation

Installing the ME-AGS-S is a simple process. Before installing, read this entire section to familiarize yourself with all aspects of the installation; then, you can thoroughly plan the details to ensure the overall system requirements are accomplished. To assist you in planning and designing your installation, review the basic system diagram shown in Figure 2-1.

WARNING: The ME-AGS-S is not an ignition-protection rated device and should not be installed in any location that requires ignition-protected equipment. To prevent fire or explosion, do not install the AGS controller in any area with extremely flammable liquids like gasoline or propane; or, in an area that contains connections between components of a fuel system.

CAUTION: Installation should be performed by qualified personnel, such as a licensed or certified electrician. The installer is responsible for determining which safety codes apply and for ensuring that applicable installation requirements are followed. Applicable installation codes vary depending on the specific location and application.

CAUTION: Review the "Important Product Safety Information" on pages ii-iii before any installation.

2.1 Installation Requirements

Review the following requirements before installing this device:

- For the AGS to automatically start and stop the generator properly, the generator must include an electric start and an automatic choke. To prevent generator damage and obtain reliable operation, use generator models designed for unattended operation. These models should also be equipped with remote operation connections and have protective systems that cause the generator to shut down during low oil pressure, over-temperature, starter lockout, and over-crank conditions.
- The ME-AGS-S controller is connected to the remote switch by a 25' communications cable. Before installing the ME-AGS-S and connecting any wires, determine: 1) the communications cable route throughout the home or vehicle/boat from the controller to the remote switch, 2) the start/stop signal wire route from the AGS controller to the generator, and 3) the wire route from the AGS controller to the monitored battery bank.

Info: DMX Power offers two pigtail adapters (ME-PT1 and ME-PT2) that externally enable the ME-AGS-S to automatically turn the generator on/off via a manually controlled switch or an automatically controlled switching device. See Appendix A for more information.

- Always check for existing electrical, plumbing, or other areas of potential damage BEFORE drilling or cutting into walls.
- If installing this device in a boat, RV, or truck, ensure the conductors passing through walls, bulkheads, or other structural members are protected to minimize insulation damage such as chafing—which can be caused by vibration or constant rubbing.
- Do not mount the AGS controller in a closed battery compartment, or in an area where water or any other liquid can enter the AGS and cause shorting or corrosion.
- The AGS should be wired to not interfere with your AC's controls or the manual start/stop switches on your generator.

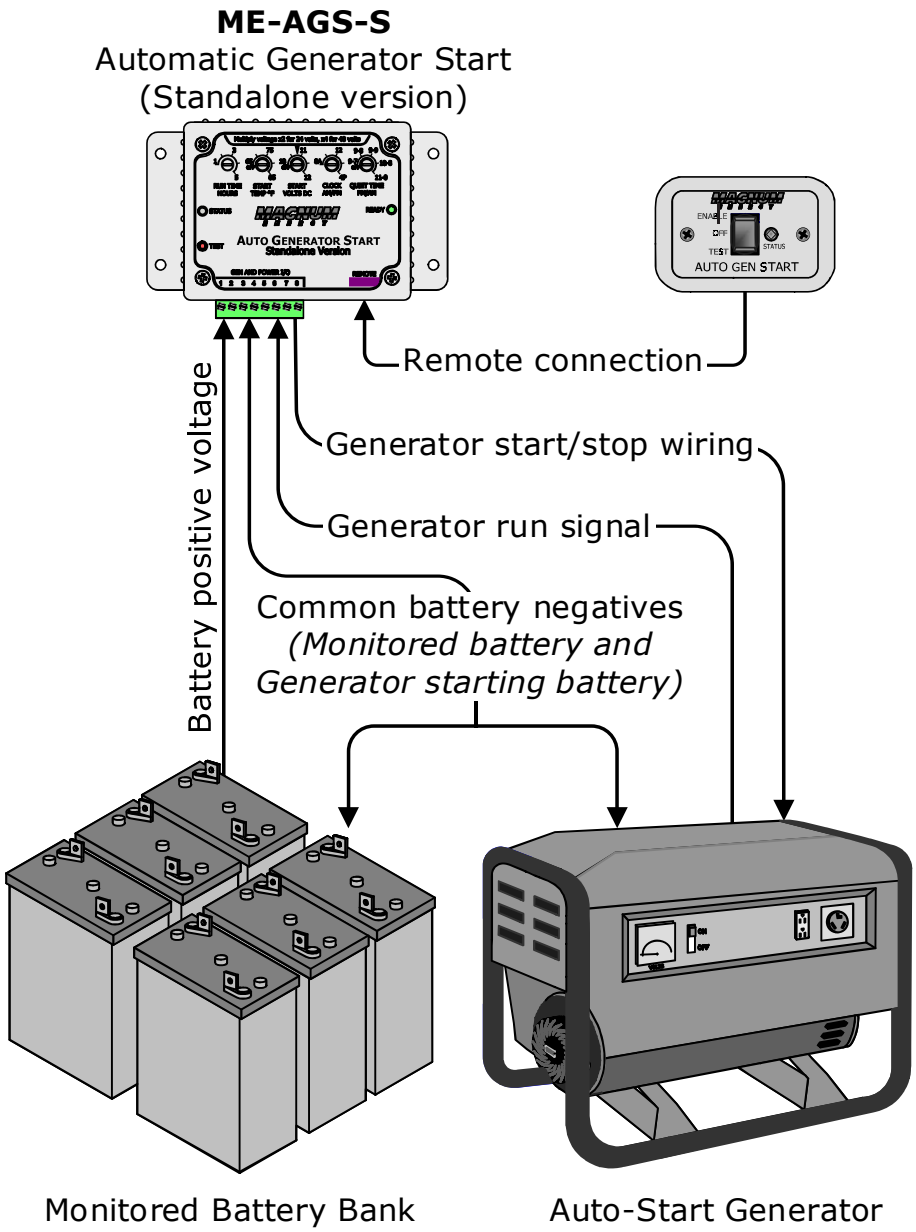

Figure 2-1, ME-AGS-S System Diagram

2.2 Required Components and Tools

2.2.1 Supplied Components

- ME-AGS-S Owner's Manual
- AGS Controller (four #8 x 3/4" Phillips mounting screws)
- AGS Switch/Bezel (two #6 x 1" Phillips mounting screws)
- 25 ft Communications Cable

2.2.2 Other Required Equipment and Materials

- #16 to #12 AWG (1.3 mm^2 to 3.3 mm^2) wire for connecting the ME-AGS-S to the generator and to the battery bank
- In-line fuse holders (with 5-amp DC fuse)

2.2.3 Required Tools

- Phillips screwdriver (#2)
- Flat-blade screwdrivers (1/4" and 1/8" blades)
- Wire stripper
- Cut-out tool (knife)
- Drill bits (7/64" & 1/8")
- Drill
- Level
- Pencil

2.3 Mounting Procedure

2.3.1 Mounting the AGS Controller

Mount the controller in a location that is clean, dry, and protected from extreme temperatures. Wiring is much easier if the controller is mounted within easy access to the generator's remote switch wiring. Refer to Figure 2-2 for the controller's dimensions.

Info: The controller/remote switch can be mounted in any direction. However, allow ample room to access the remote switch and the controller's adjustment dials, and to view the LEDs for operational status and troubleshooting.

Note: *Remove the green 8-pin friction fit connector from the controller—pull straight out—before mounting the AGS. Do not re-connect until after the installation is completed and functional tests are performed.*

Mount the AGS controller using the four #8 x 3/4" screws provided.

2.3.2 Mounting the AGS Remote Switch

Mount the remote switch in a location that is convenient, clean, dry, and protected from extreme temperatures.

Info: The temp sensor used to activate the temperature turn-on feature is located on the back of the AGS remote switch. If using the temperature turn-on feature, the switch must be placed where the sensor can accurately determine room temperatures. DO NOT mount near window drafts or heating and air conditioning ducts, and not on exterior walls.

1. Cut a hole for the remote switch. See Figure 2-3 for dimensions.
2. Plug the communications cable into the RJ12 connector on the back of the AGS switch (Section 2.4), and then feed the communications cable (6-conductor data cable) through the opening and route it to the AGS.

Info: Use care in routing the cable to ensure it does not become pinched or cut by rough or sharp edges. Leave enough slack to allow movement of the cable once installed.

3. Mount the switch & bezel using the two #6 x 1” screws provided.

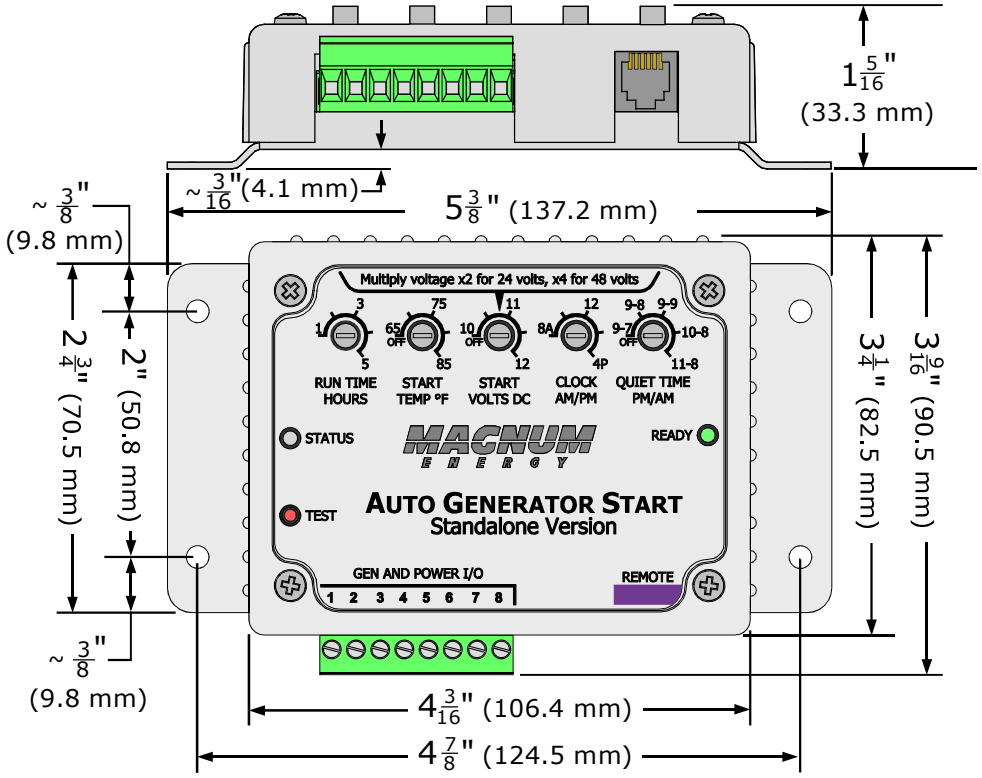

Figure 2-2, Controller Dimensions

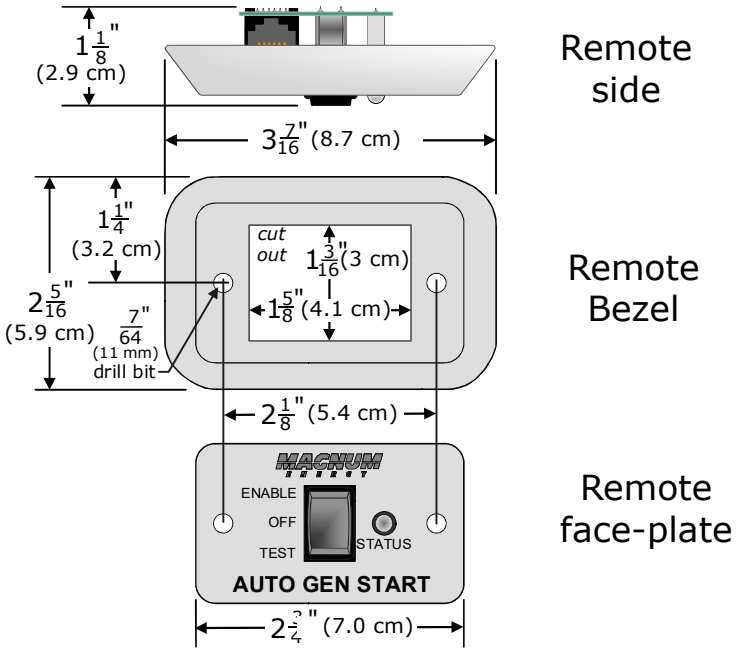

Figure 2-3, Remote Dimensions

2.4 Connecting the Communication Cable

After connecting one end of the communication cable to the back of the AGS remote switch, connect the other end of the cable to the REMOTE port (purple label) on the AGS controller (see Figure 2-4).

Info: The communication cable is a 6-conductor, flat, data standard with RJ12 (6-position/6-wire) connectors on each end (see Figure 2-5). The 25' communications cable may be extended to a maximum of 250 feet if needed.

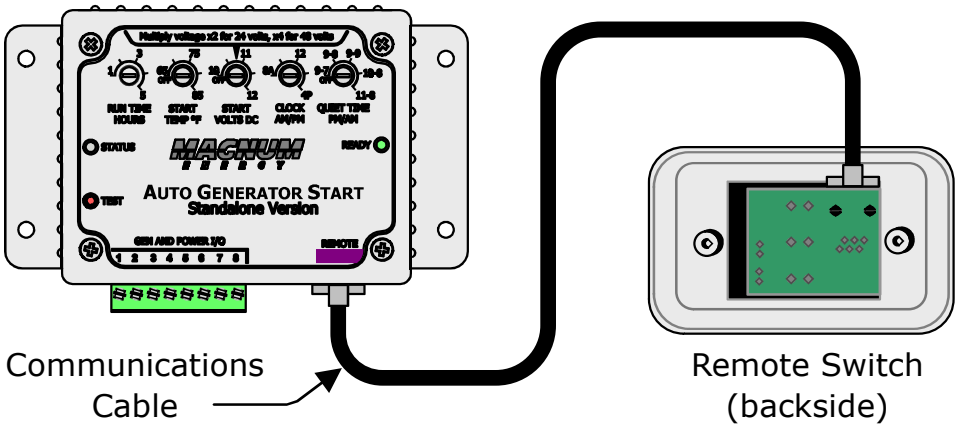

Figure 2-4, Communication Cable Connection

2.4.1 Communication Cable

The 6-conductor communications cable has a RJ12 (6-position/6-wire) connector on each end and is wired as a *data type* cable. This means that when the RJ12 connectors are held side by side with both of the connector tabs facing the same way, the color of the conductors in each connector is the same from top to bottom (as shown in Figure 2-5).

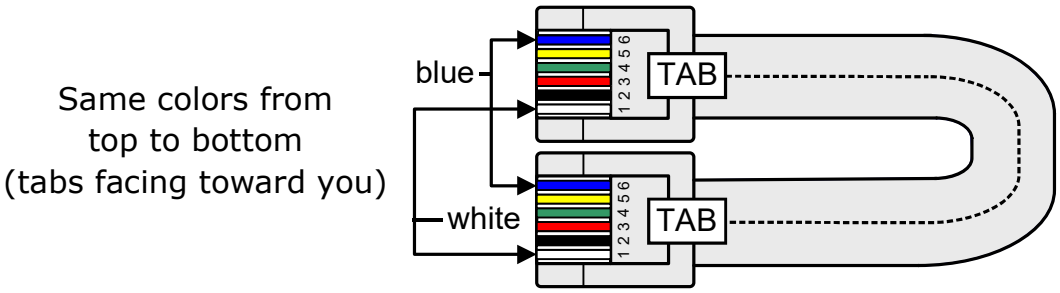

Figure 2-5, Communication Cable (Data Type)

2.5 ME-AGS-S Terminal Block Wiring

Refer to Figure 2-7 when wiring the generator to the controller's terminal block.

The AGS should already be mounted and the 8-port friction-fit terminal block unplugged (pull straight out). Ensure the terminal openings are unscrewed enough to allow wires to be inserted.

CAUTION: DO NOT plug in the 8-port terminal block. After all the wiring to the controller is complete and all the settings have been configured, a power-up test will be performed (Section 3.3.1). **DO NOT** plug in the 8-port terminal block until the power-up test has been successful.

You must use a fuse rated at ≤5 amps to protect all power circuits connected to the AGS (do not fuse the negative connection on Terminal #4). Ensure the fuse is correctly rated for the wire size used. Refer to national/local codes for rating and type. Normally, a minimum #16 AWG (1.31 mm^2) wire is required in order to use a 5-amp fuse.

Info: The green 8-port terminal block accepts CU/AL conductors from #30 to #12 AWG (0.05 to 3.3 mm^2).

2.5.1 Power Connections (Terminals 3 and 4)

1. Connect a wire (black) from the monitored battery bank's negative terminal to Terminal 4 on the 8-port terminal block.
2. Connect a wire (red) with a 5-amp in-line fuse from the monitored battery bank's positive terminal to Terminal 3 on the 8-port terminal block.

2.5.2 Generator Run Sense Connection (Terminal 2 and 4)

Terminal 2 on the 8-port terminal block is used as a generator run sense (i.e., switched B+ or a positive battery signal from the hour meter or gen running light). This run sense voltage is used to determine that the generator is operating and to prevent another starter crank while the generator is running.

Info: The run sense signal from the generator to Terminal 2 (positive) and Terminal 4 (negative) must be between 10-40 VDC and <u>only</u> while the generator is running.

3. Connect a wire (preferably not black or red) from the generator's run sense output to Terminal 2 on the 8-port terminal block.
4. Connect the negative terminal of the monitored battery bank to Terminal 4 (power negative) on the 8-port terminal block. Ensure the negative terminal on the <u>generator battery</u> is referenced/ connected to the negative terminal on the <u>monitored battery</u>.

Info: The negative side of the run sense signal from the generator must be in common with the negative side of the monitored battery bank. This ensures that the positive battery voltage (to Terminal 3) and the positive run sense voltage (to Terminal 2) have a common negative reference (to Terminal 4) and are correctly measured by the ME-AGS-S.

What if my generator does not have a run sense output? If your generator is not equipped with a generator run sense output, review Figure 2-6 for alternative options.

Option 1 – Tap into the positive side of the generator's hour meter or running light; ensure the voltage is only 10-40 VDC while the generator is running.

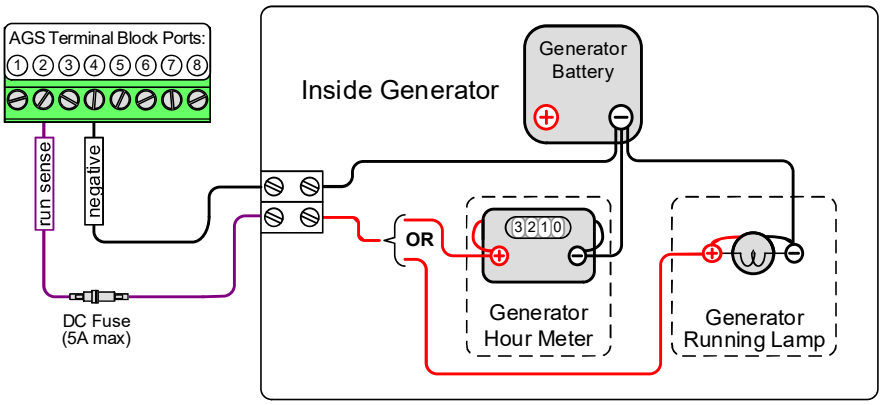

Option 2 – Use a 120 VAC to 12 VDC step-down transformer (normally used to charge power equipment batteries) and plug into the generator's 120 VAC output. The step-down transformer provides 12 VDC output only while the generator is running.

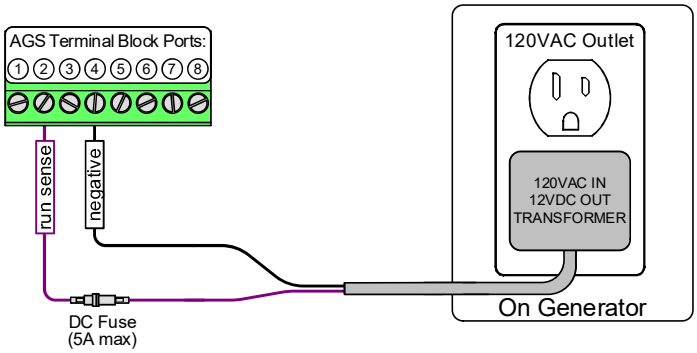

Option 3 – Use an external 120 VAC coiled relay to bring the generator's battery voltage to the AGS run sense port (Terminal #2) only while the generator is running. The generator's battery voltage must be 10-40 VDC.

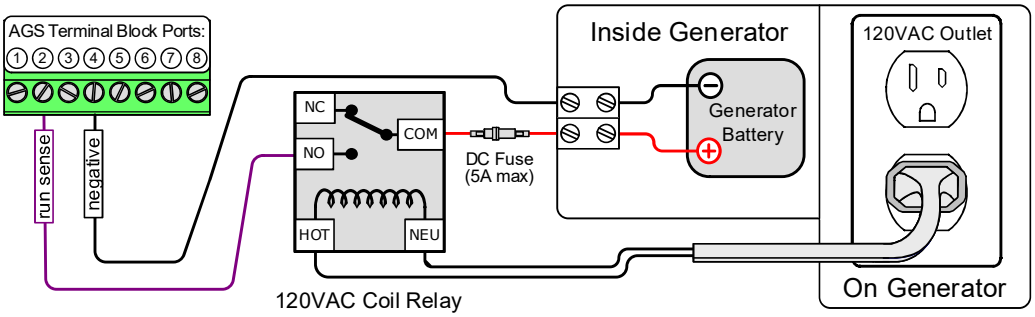

Figure 2-6, Generator Run Sense Options

2.5.3 Gen Start/Stop Connections (Terminals 1, 5, 6, 7, & 8)

This section details the control relays inside the AGS controller and provides information on wiring these relays to the generator's start/stop circuit. You must identify the generator's start and stop wiring requirements to determine how many relays you require, the amount of wires you connect, and in what combination.

If the generator is equipped with a remote control terminal or connector, the connections to the AGS control relays are made much easier if the generator's optional remote control panel is purchased. Connecting to the generator's remote panel also eliminates the need to make connections inside the generator.

The AGS controller provides three control relays (RY1, RY2, and RY3) to operate the autostart/autostop functions of your generator. These relays are dry contacts (provides no voltage or current) and operate only as switches that turn low amperage devices on/off. They are not intended to directly provide power to starter motors or ignition systems. Rather, they are used to send a signal to operate the coil of another higher amperage device, which does the actual switching of power.

CAUTION: A fuse rated at 5 amps or less must be used to protect each of the relays. **The warranty does not cover damage to these relays.** Fuses should be located as close as possible to the generator connection. A fuse must be used even if the circuit is providing only a "dry contact" or "ground" connection—it will prevent damage if the connection is miswired or damaged.

Info: To set the generator type—which determines the operation of the AGS relays—see "GEN TYPE Setting" in the Setup section.

Info: Due to the different generator types and the various starting/stopping wiring configurations used by generator manufacturers, detailed wiring instructions are not provided in this manual. Please refer back to your generator's documentation for wiring details.

Info: For more info and to view diagrams on connecting the AGS to the start/stop circuit on many generators, refer to our website at www.dmx-power.com.

Depending on your generator's start and stop wiring requirements, you may only need to use one relay (RY1) for fully automatic two-wire generators; two relays (RY1 & RY2) for 3-wire generators; or all three relays (RY1, RY2, RY3) for generators that require an independent bypass or preheat circuit.

The connection points to each relay are as follows (see Figure 2-7):

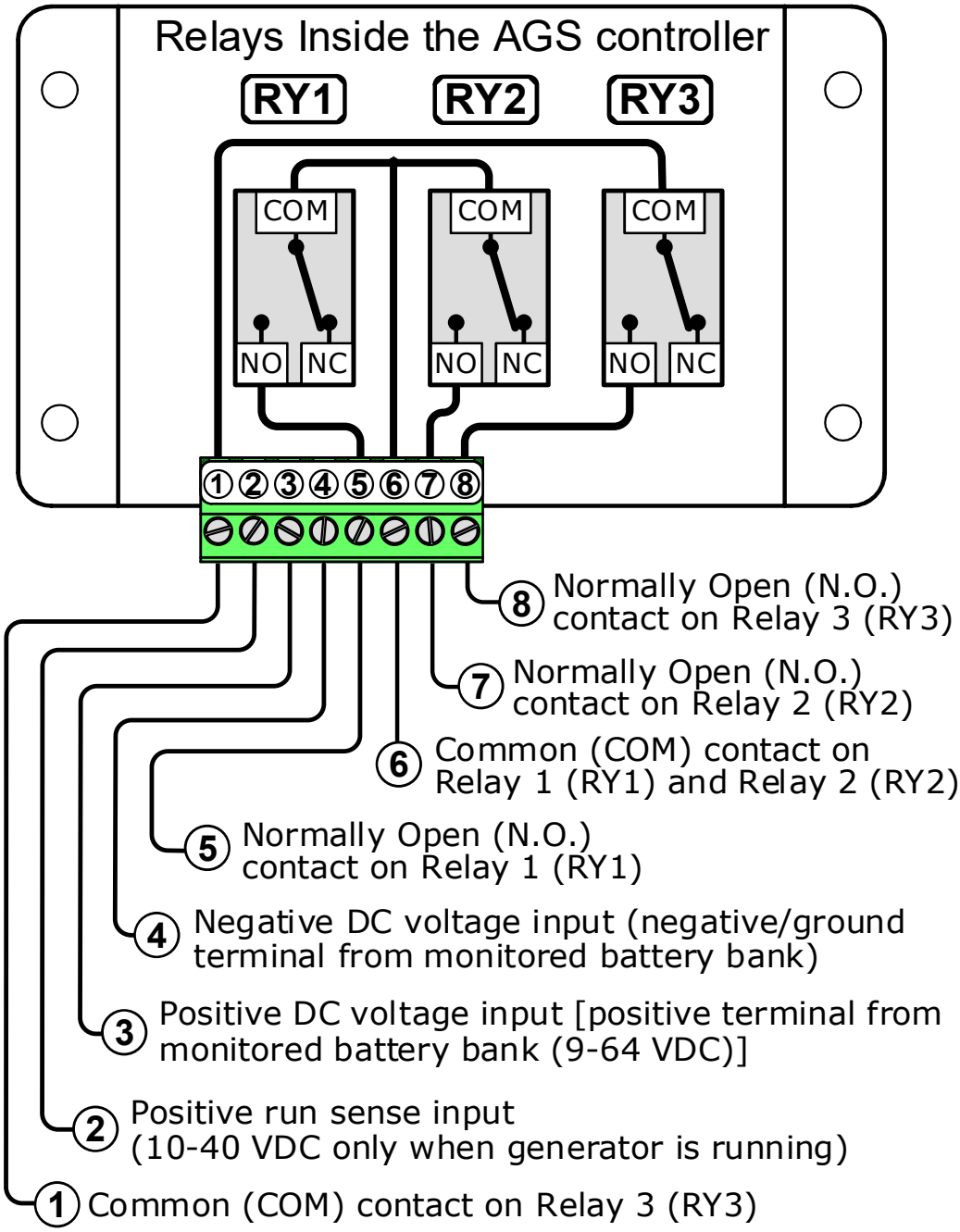

Figure 2-7, Wiring to the AGS Controller's Terminal Block

2.6 Common ME-AGS-S Generator Wiring Diagrams

The most common generator starting/run/stop circuits can be divided into three major types: two-wire, three-wire "momentary", or three-wire "maintain". See Figures 2-9 through 2-12 for examples.

Info: The term "three-wire" refers to the minimum number of wires required to control the starter motor and to run the generator—more than three wires may actually be needed.

The "two-wire" generator types (Figure 2-9) integrate the control circuits for start-up, running and stopping. The generator starts and runs when two "control" wires are connected, and stops when they are disconnected.

The "three-wire momentary" generator types (Figures 2-10 & 2-12) use a three-position momentary type switch that controls their operation. To start the generator, the switch is momentarily held to the *START* position. This energizes the ignition system and cranks the starter motor. Once the engine has started, the *START* switch is released and it returns to a center position (i.e., "momentary" run control). To shut down the generator, the switch is held to the *STOP* position until the engine dies. Once the switch is released, it returns to the center position (i.e., "momentary" stop control).

The "three-wire maintain" generator types (Figure 2-11) use an automotive type starting circuit. Operating a switch that is first turned to a *RUN* position and then momentarily held to a *START* position to start the generator. Once the engine has started, the switch is released and it returns to the *RUN* position (i.e., "maintain" run control). To shut down the generator, the switch is moved to the *OFF* position (i.e., "maintain" stop control).

2.7 Warning Label

It is unsafe to perform maintenance on the generator/electrical panel if just the generator is turned off. The AGS system can automatically turn on the generator and power the panel. See Figure 2-12.

The supplied warning label informs all that an automatic generator starting device is installed in your electrical system. Place the label in a clearly visible location at the generator (ensure it is visible at the generator cabinet or at the enclosure that guards against electrical shock or moving parts hazards).

WARNING: To protect servicing personnel, ensure the generator and AGS are properly disabled (i.e., remove starting battery from generator and remove all power to the AGS by unplugging the AGS's terminal block) prior to performing maintenance on the generator or electrical panel.

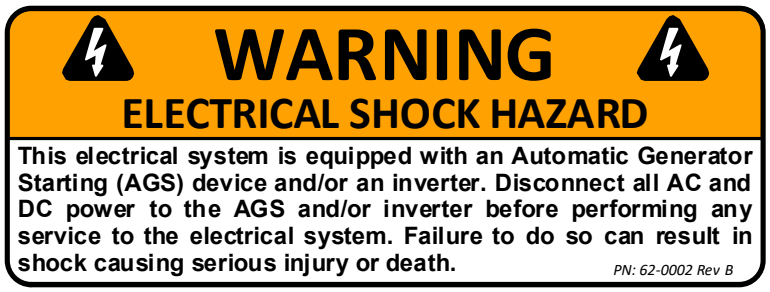

Figure 2-8, Warning Label

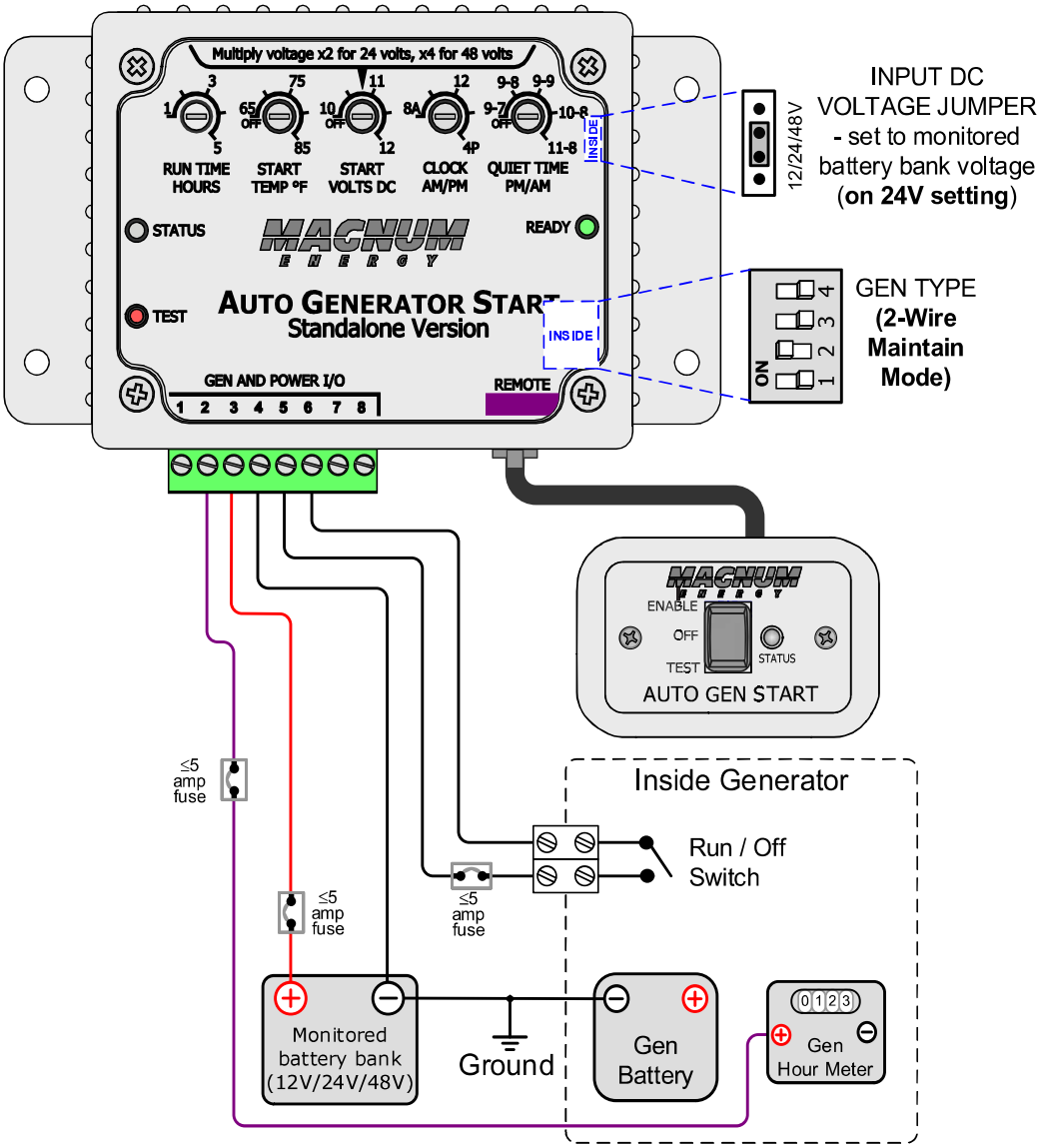

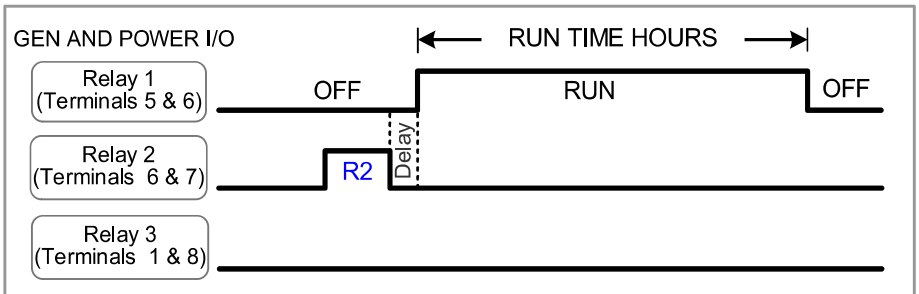

Timing Information			
R2 (Relay 2) Time	10 sec.	Time between start attempts	2 min.
Delay time	4 sec.	Total start attempts	4

Relay timing for GEN TYPE: **2-Wire Maintain Mode**

Figure 2-9, Two-wire Start Control

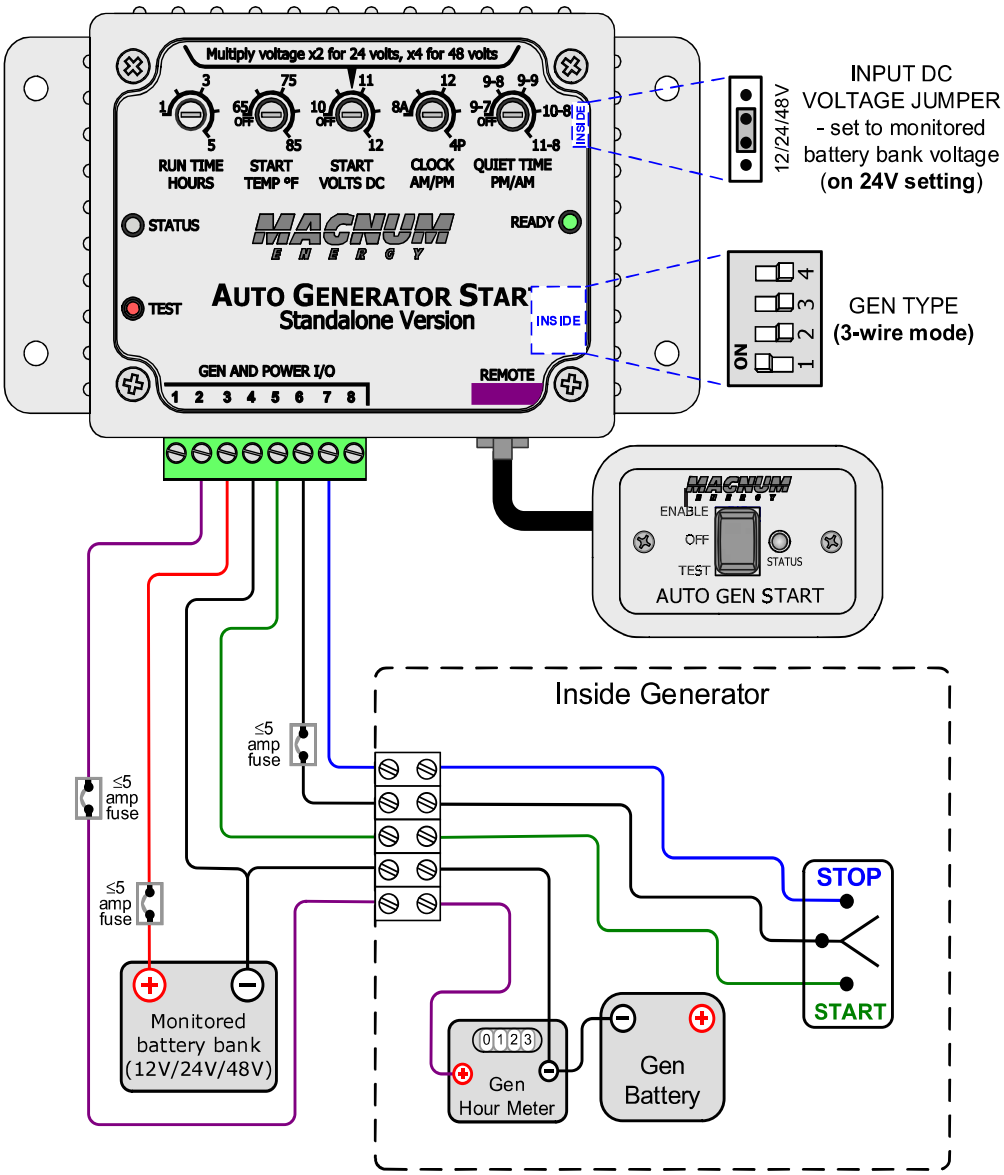

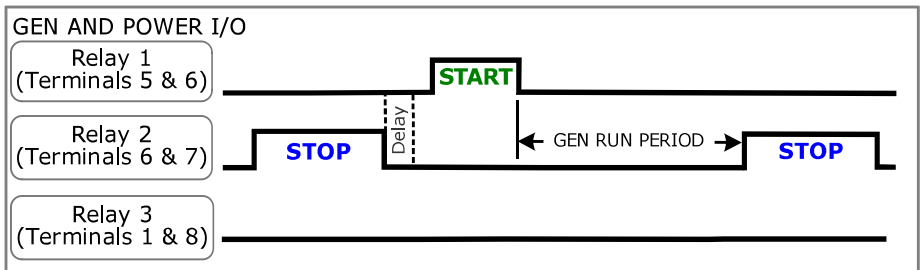

Timing Information			
STOP Time	**10 sec.**	Start Delay Time	2 sec.
START Time	**5 sec.**	Time between start attempts	2 min.

Relay timing for Gen Type: **3-Wire Mode**

Figure 2-10, Three-wire Momentary Control

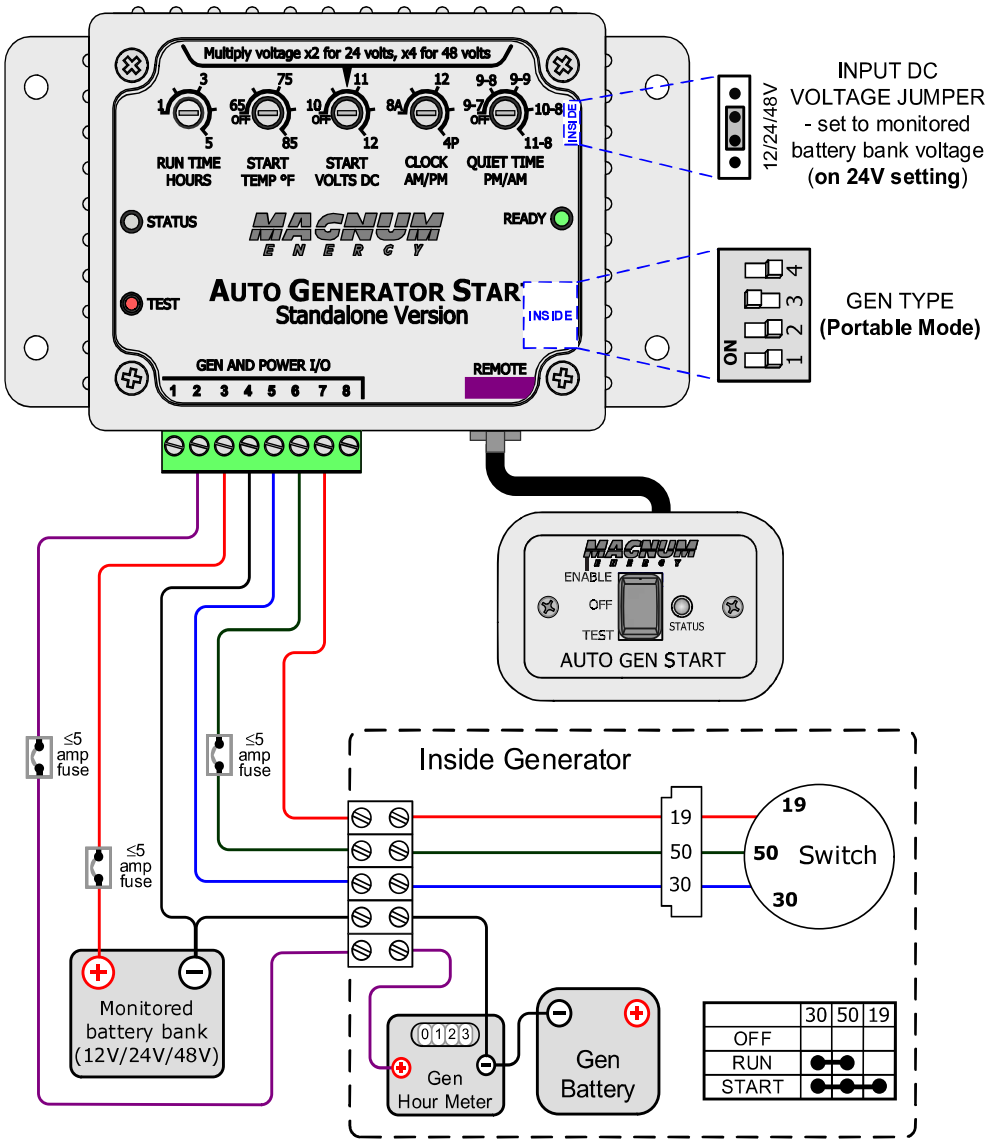

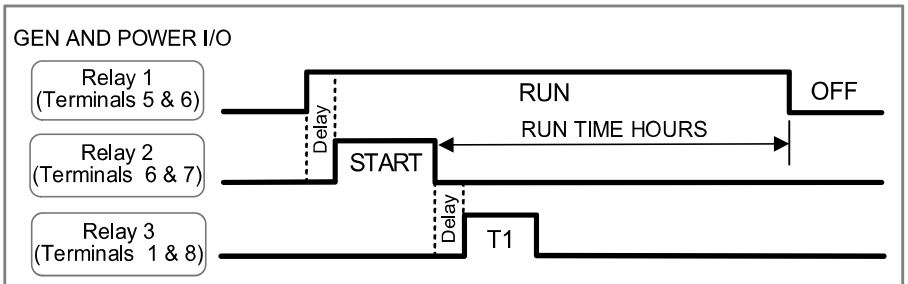

Timing Information			
START Time	10 sec.	Time between start attempts	2 min.
T1 Time	5 sec.	Total start attempts	4
Delay time	2 sec.		

Relay timing for GEN TYPE: **Portable Mode**

Figure 2-11, Three-wire Maintain Control

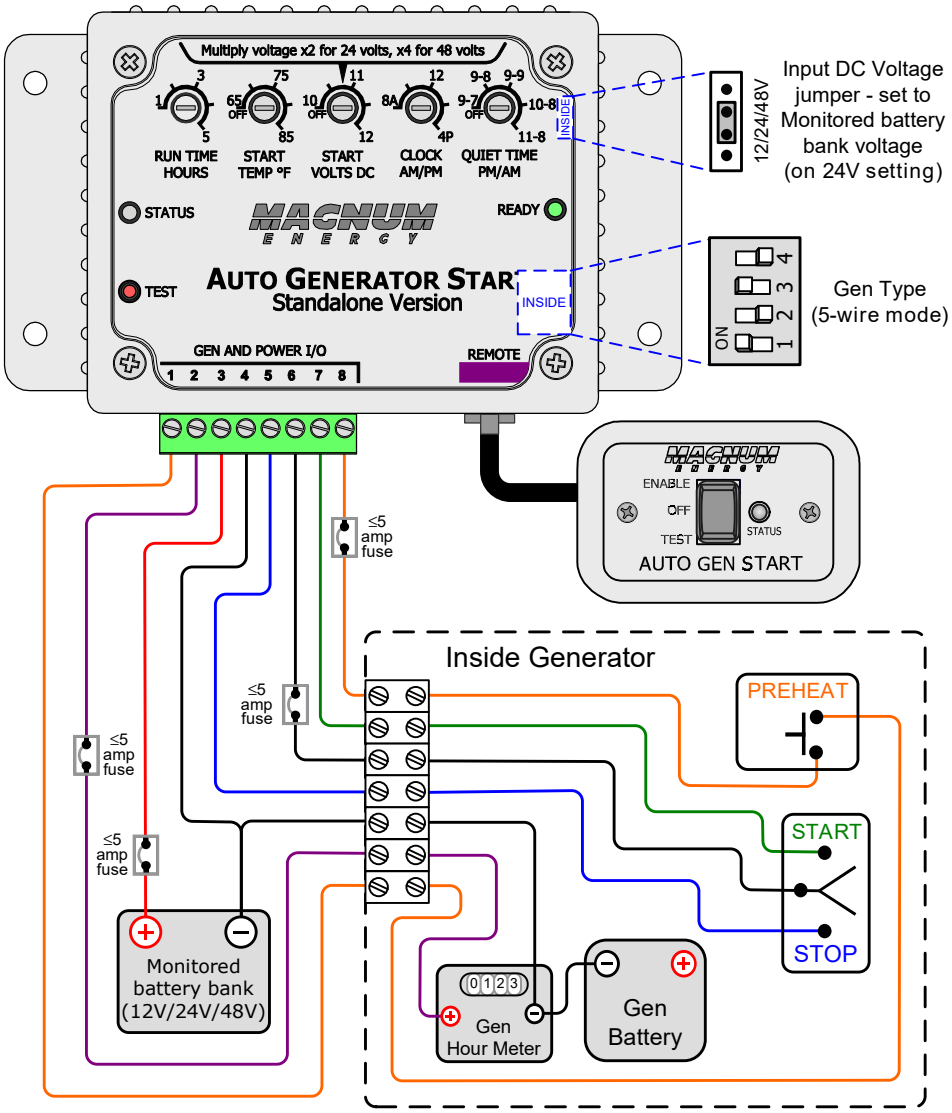

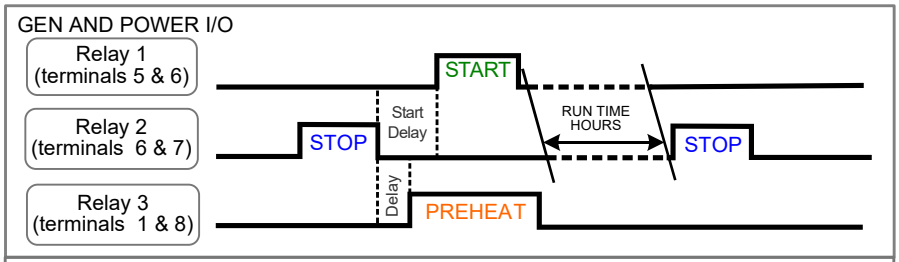

Timing Information			
STOP Time	10 sec.	Preheat Delay time	4 sec.
START Time	10 sec.	Time between start attempts	2 minutes
PREHEAT Time	25 sec.	Total Start attempts	4
Start Delay Time	14 sec.		

Relay timing for Gen Type: 5-wire Mode

Figure 2-12, Three-wire Momentary Control (with Preheat)

3.0 Setup

This section covers AGS settings (and how to adjust these settings).

3.1 Internal Settings

Unscrew the AGS's four top screws and remove the cover to access an input DC voltage jumper and a 4-position DIP (Dual In-line Package) switch (see Figure 3-1). The *INPUT DC VOLTAGE* jumper position determines the controller's DC operating voltage. The DIP switch configuration is used to select the *GEN TYPE* setting, which determines how the internal relays operate to autostart and autostop the generator.

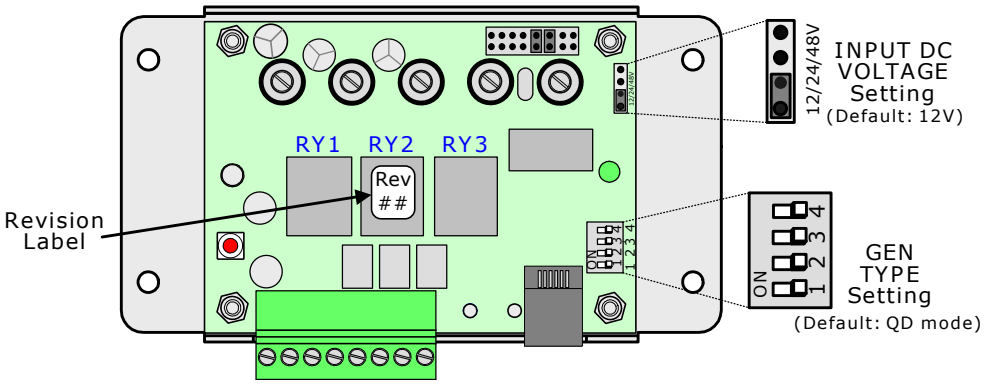

Figure 3-1, Inside the AGS Controller

INPUT DC VOLTAGE Setting: The *INPUT DC VOLTAGE* setting is determined by connecting two small pins with a small black plastic box (i.e., jumper). This setting can be configured for 12, 24, or 48 VDC operation, which is determined by the nominal DC voltage connected to Terminals 3 and 4 on the AGS.

- 12V DC operation – position the jumper on the bottom two pins
- 24V DC operation – position the jumper on the middle two pins
- 48V DC operation – position the jumper on the top two pins

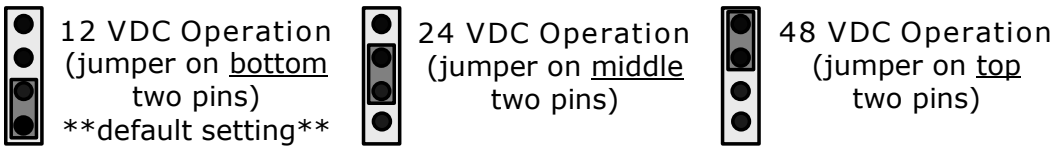

Figure 3-2, DC Voltage Settings

GEN TYPE Setting: The *GEN TYPE* setting is determined by a DIP switch—actually 4 small switches that can be turned to the *ON* or *OFF* position. The position of each of these switches is used to determine the open and close timing sequence for the three internal AGS relays (RY1, RY2 and RY3). The multiple positions of the DIP switch allow a wide range of generator start/stop circuit configurations.

After determining the appropriate start/stop timing sequence for your generator, use Table 3-1 to determine and set the correct *GEN TYPE* setting for your generator's start/stop requirements.

Table 3-1, GEN TYPE Settings

GEN TYPE	Relay Timing/Operation (RY1/RY2/RY3)	Time Period
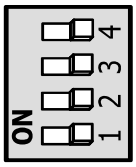 QD Mode *(default)*	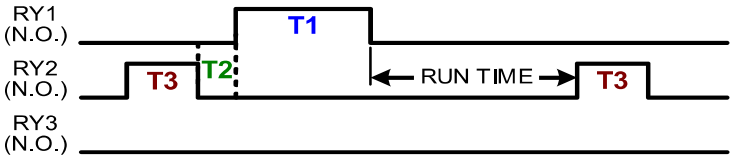 Generator: Quiet Diesel (Onan).	T1 = 20 sec. T2 = 4 sec. T3 = 10 sec.
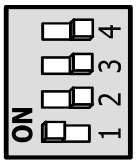 3-Wire Mode	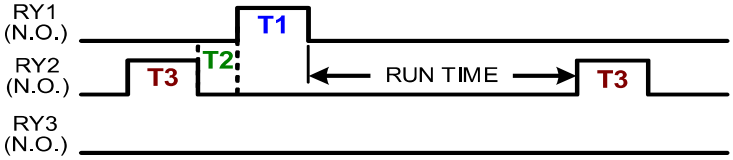 Generators: Marquis, Emerald, and Microquiet (Onan); Quiet Pack Series (Generac).	T1 = 5 sec. T2 = 2 sec. T3 = 10 sec.
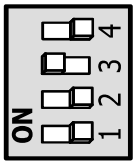 Portable Mode	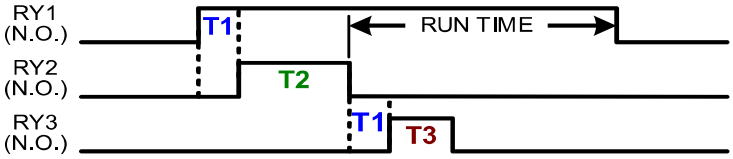 Generator: EM Series with remote control (Honda).	T1 = 2 sec. T2 = 10 sec. T3 = 5 sec.
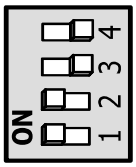 2-Wire Momentary Mode	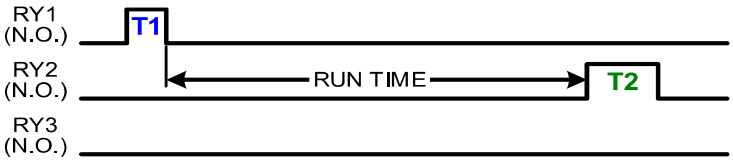 Generator: PT-ECU-63 controller with 2-wires (Powertech).	T1 = 2 sec. T2 = 10 sec.
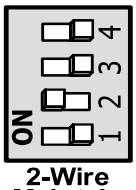 2-Wire Maintain Mode	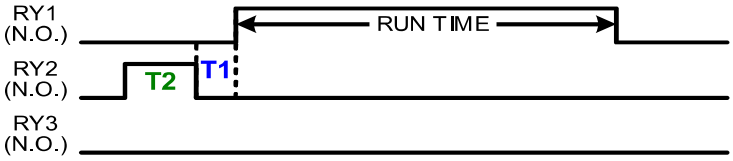 Generators: RMY Series (Kohler); DynaGen Controllers	T1 = 4 sec. T2 = 10 sec.
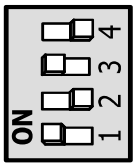 5-Wire Mode	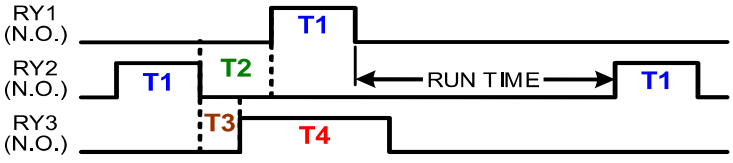 Generators: BTDA / BEG (Westerbeke), 205-DS (Martin Diesel), NL-673 (Northern Lights)	T1 = 10 sec. T2 = 14 sec. T3 = 4 sec. T4 = 25 sec.

Info: For examples and assistance in determining which *GEN TYPE* setting is used for specific generators, view the generator wiring guidelines at:
www.dmx-power.com

3.2 External Settings

The generator run time, temperature, and voltage settings come pre-set directly from the factory. For the majority of customers, the factory default settings as shown in Table 3-2 are appropriate. If you need to make changes to the factory settings, you can do so by rotating the knobs on the front panel of the AGS controller either clockwise or counterclockwise (Figure 3-3).

Table 3-2, ME-AGS-S Default Settings

	Adjustable Settings	Factory Default Values
External Settings	RUN TIME HOURS	2 (Hours)
	START TEMP °F	OFF (disabled)
	START VOLTS DC	11 (Volts DC)
	CLOCK AM/PM	8A (8 AM)
	QUIET TIME PM/AM	OFF (disabled)
Internal Settings	INPUT DC VOLTAGE	12 Volts (bottom two pins)
	GEN TYPE	QD Mode (all 4 switches off)

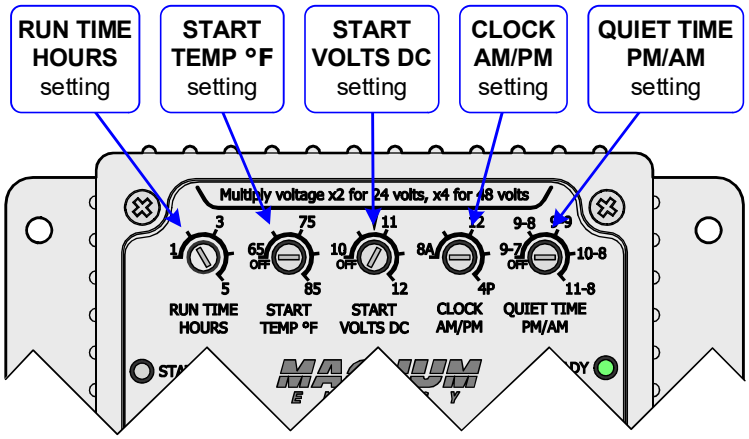

Figure 3-3, External Settings

RUN TIME HOURS: This setting determines the length of time the generator runs once started. The generator starts because the battery voltage has fallen to the *START VOLTS DC* setting for at least two continuous minutes; or, the temperature around the remote switch has risen to the *START TEMP °F* setting. The run time can be set from 1-5 hours. To change this setting, slowly rotate the knob marked *RUN TIME HOURS* clockwise to increase generator run time or counterclockwise to decrease the generator run time.

START TEMP °F: This setting allows you to enable and adjust a temperature value that causes the generator to automatically start. When the temperature around the AGS switch <u>increases</u> to the *START TEMP °F* setting, the generator automatically starts and runs based on the *RUN TIME HOURS* setting. The AGS attempts to start

the generator immediately once the temperature rises to this setting. The temperature start setting is adjustable from 65°F-85°F (18°C-29°C). If this feature is not needed, ensure the adjustment knob is turned fully counterclockwise to the *OFF* position.

Why would I use the temperature start feature? For RV users, you can set the AC to turn on (with power provided by generator) and leave the RV. The generator will automatically start when the temperature rises to your AGS temperature start setting, providing power to the air conditioner; thereby, turning it on. This allows you to leave pets and precious items in your coach while dry camping in hot weather; knowing your RV will stay cool and comfortable—plus, while the generator is on, the house batteries are being charged.

START VOLTS DC: This setting allows you to enable and set a battery voltage value that causes the generator to automatically start. When the battery voltage decreases to or below this setting for two continuous minutes, the generator automatically starts and runs based on the *RUN TIME HOURS* setting. The voltage start setting is adjustable from 10-12 VDC (12 VDC jumper), 20-24 VDC (for 24 VDC jumper), or 40-48 VDC (48 VDC jumper). If the DC voltage start feature is not needed, turn the adjustment knob fully counterclockwise to the *OFF* position.

Info: For 24 VDC applications, double the value indicated on the cover (i.e., 11 VDC = 22 VDC) and for 48 VDC applications, multiply the indicated value by four (i.e., 11 VDC = 44 VDC).

CLOCK AM/PM: This setting is used to set the internal clock of the AGS. The internal clock must be set to the correct time in order for the Quiet Time feature to function appropriately. If the Quiet Time feature is not used, this clock setting is not required to be adjusted.

To set or change the clock, ensure the current time of day is between the hours of 8 AM and 4 PM; then, slowly rotate the knob marked *CLOCK AM/PM* clockwise to increase the time or counterclockwise to decrease the time. Once set, the clock will continue to keep time. However, the clock must be reset if the controller loses power, or when you change time zones.

QUIET TIME PM/AM: This setting is used to prevent the generator from starting during specific hours of the evening (PM) and early morning (AM). It is adjustable for five pre-selected time ranges.

To set Quiet Time, turn the dial either counterclockwise or clockwise to the hours required: 9-7 (9 PM to 7 AM), 9-8 (9 PM to 8 AM), 9-9 (9 PM to 9 AM), 10-8 (10 PM to 8 AM), or 11-8 (11 PM to 8 AM). The program only needs to be set once. If the Quiet Time feature is not needed, turn the dial fully counterclockwise to the *OFF* position.

Info: If the generator is running when the Quiet Time evening hour (PM) is reached, it automatically stops and does not automatically start until after the Quiet Time morning hour (AM) has passed.

3.3 AGS Functional Tests

After all electrical connections to the AGS, batteries, and generator have been completed (and prior to connecting the 8-pin green terminal block into the AGS controller), perform the following tests to verify that the AGS system is functioning correctly and the wiring from the AGS to the generator is correct.

If the AGS fails either test, or the *STATUS* indicator turns red (indicating a fault), refer to the Troubleshooting section.

3.3.1 Power-Up Test

1. Ensure the AGS remote switch is set to *OFF* (center position) and connected to the controller by the communications cable.
2. Before re-connecting the 8-pin terminal block to the AGS, use a multimeter to verify the correct polarity and to ensure that the voltage to Terminals 3 (+) and 4 (–) is correct according to the position of the DC input jumper (refer to Figure 3-2).
3. Plug the 8-pin terminal block into the controller, and then verify that the AGS's green *READY* indicator comes on (solid) and the *STATUS* indicator flashes green once.

Info: The *READY* indicator flashes when the AGS controller is powered and the remote switch is not connected to the AGS.

3.3.2 Generator Wiring Test

This start/stop test is used to confirm that all wiring from the generator to the AGS controller is correct and that the GEN TYPE setting is appropriately configured for your generator type.

To conduct the start/stop test:

1. a) Press and release the AGS's red *TEST* switch (Figure 4-1); or,
   b) Set the remote switch to the *TEST* position (Figure 4-2).
2. After the *TEST* button/switch is activated, the AGS initiates an automatic generator start/stop sequence.
3. The *STATUS* indicator on the controller (and on remote switch) begins to flash green and the generator should start.
4. While the generator is running, view the *STATUS* indicator and ensure it turns solid green.
5. The generator should run for approximately 30 seconds before automatically turning off.

Wait at least 5 minutes to ensure the generator remains off and the AGS does not attempt another start. If this test passes, then activate the AGS system by setting the remote switch to *ENABLE*.

If the *STATUS* indicator shows a fault condition (LED is solid red), set the remote switch to *OFF* and then back to the *ENABLE* or *TEST* position. If problem persists, refer to the Troubleshooting section.

Info: The AGS attempts to start the generator 4 times. If after 4 attempts the generator fails to start, the *STATUS* LED turns red—indicating a fault.

4.0 Operation

This section details the front panel controls and the LED indicators on the AGS controller and remote switch, and explains AGS operation using these LED indicators.

4.1 AGS Controller LED Indicators

The AGS controller (Figure 4-1) provides a pushbutton to test system operation, and two LED indicators for viewing system operation.

4.1.1 TEST Switch

When pressed and released, the *TEST* switch attempts to turn on the connected generator and allows it to run for at least 30 seconds before turning it off. This start/stop test is used to confirm that all wiring from the generator to the AGS is correct and that the *GEN TYPE* setting is correctly configured for your generator type.

Info: Pushing and releasing the AGS's red *TEST* pushbutton switch enables the same test as pressing and releasing the momentary *TEST* position on the AGS remote switch.

4.1.2 STATUS LED Indicator

Flashing Green – Indicates that the AGS system is initiating a generator start sequence. This can happen based on two conditions, either: a) The *TEST* switch (on the controller or remote switch) has been pressed and released; or, b) The remote switch has been set to the *ENABLE* position and the *START TEMP °F* setting and/or the *START VOLTS DC* setting has been reached.

Solid Green – Indicates the generator successfully started and is providing the run sense voltage to Terminals 2 (+) and 4 (–) of the AGS controller.

Solid Red – This is a fault condition to indicate that the generator has not provided a correct run sense voltage to Terminals 2 (+) and 4 (–) of the AGS controller after four start attempts.

4.1.3 READY LED Indicator

Solid Green (***normal AGS system indication)*** – Indicates the AGS controller has power and the remote switch is plugged in correctly.

Flashing Green – Indicates that the AGS controller has power, but the remote switch is not sensed. This means the remote switch is either not connected, incorrectly connected, is defective, or has an incorrect or defective cable.

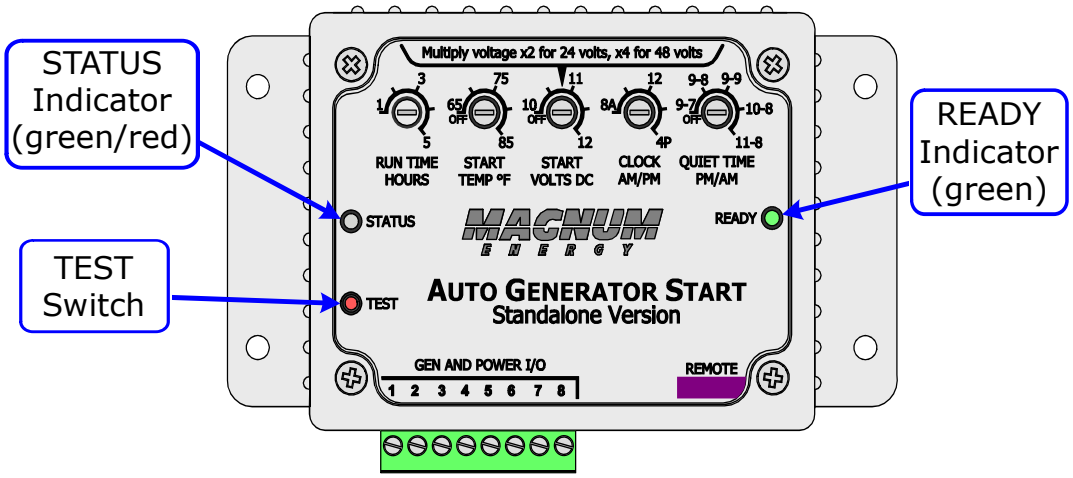

Figure 4-1, Controller Front Panel Controls and Indicators

4.2 Remote Switch Operation

The AGS remote switch (see Figure 4-2) provides information and enables you to operate the controller. The remote switch receives its power from the controller through the communications cable, and comes on automatically when power is applied to the AGS controller.

The remote switch provides an ENABLE position to activate the auto gen system, an OFF position to turn the auto gen system off, and a momentary TEST position that allows the auto gen system to be tested remotely. A STATUS indicator is also included to remotely view system status.

4.2.1 Switch Positions

OFF – When the AGS switch is placed in the *OFF* position, the *STATUS* indicator will be off and all AGS generator start functions are disabled.

ENABLE (***normal operating position)*** – When the AGS switch is placed in the *ENABLE* position, the AGS system is activated/enabled and now monitors battery voltage and/or temperature to determine when to automatically start the generator.

TEST – When the AGS switch is pushed to the momentary TEST position, the AGS initiates an automatic generator start/stop sequence. This test attempts to turn on the connected generator and allow it to run for at least 30 seconds before turning the generator off. This start/stop test is used to confirm that all wiring from the generator to the AGS is correct and that the AGS is correctly configured for your generator type.

Info: Pushing and releasing the momentary *TEST* position enables the same test as pressing and releasing the red *TEST* pushbutton switch on the AGS controller.

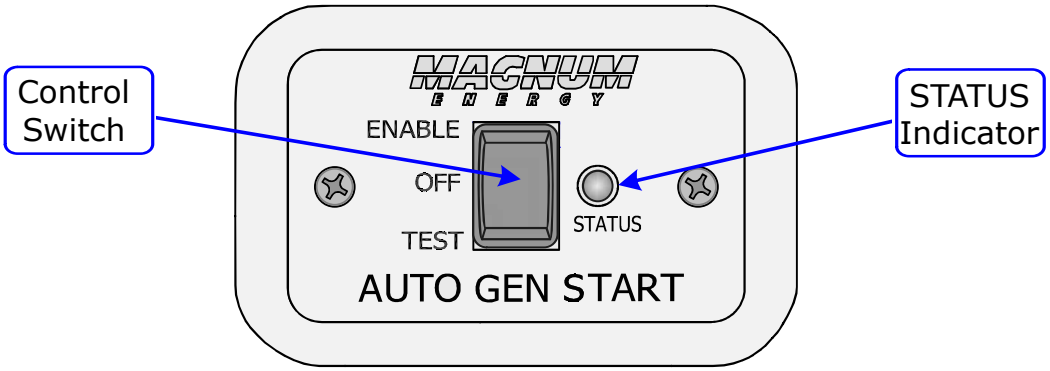

Figure 4-2, Remote Switch Controls and Indicators

4.2.2 STATUS LED Indicator

Flashing Green – Indicates that the AGS system is initiating a generator start sequence. This can happen based on two conditions, either: 1) The *TEST* switch (on the controller or remote switch) has been pressed and released; or, 2) The remote switch has been set to the *ENABLE* position and the *START TEMP °F* setting and/or the *START VOLTS DC* setting has been reached.

Solid Green – Indicates the generator has started successfully and is providing the required run sense voltage to Terminals 2 (+) and 4 (–) of the AGS.

Solid Red – This is a fault condition to indicate that the generator has not provided a correct run sense voltage to Terminals 2 (+) and 4 (–) of the AGS controller after four start attempts.

4.3 AGS System Operation

When the AGS is enabled and has determined that a low battery and/or a high temperature condition exists, it attempts an automatic generator start. This is done by closing its internal relays (based on the *GEN TYPE* selection) to control the starter much like a person does when manually starting the generator. The starter is turned on for short periods of time and then turned off. If the AGS determines that the engine has started while cranking (indicated by a solid green *STATUS* indicator), the starter is turned off after a short delay. If the engine does not start, another attempt to turn on the starter is made after a long delay period. This is repeated until either the generator starts or the maximum number of start attempts is reached, which causes the AGS to go into a fault condition (indicated by a solid red *STATUS* indicator).

WARNING: Never allow the generator to start/run in an enclosed garage or any other type of enclosed structure without proper ventilation. Carbon monoxide, an odorless, colorless, deadly gas may accumulate and cause serious injury or death.

4.3.1 Operational Notes

- To manually stop the generator during the run time cycle, simply press the remote switch to the *OFF* position.
- If a fault condition occurs, press the AGS remote switch to *OFF* and then back to the *ENABLE* or *TEST* position. If the problem persists, refer to the Troubleshooting section in this manual.
- When the AGS remote switch is placed in the *OFF* position, all AGS generator start functions are disabled. The *STATUS* indicator is also off when the switch is in this position.
- Once the generator has completed the *RUN TIME HOURS*, the AGS immediately begins to monitor the *START TEMP °F* and *START VOLTS DC* settings for the next autostart cycle.
- It is recommended that the AGS remote switch be set to the *OFF* position if the connected generator is placed into storage or left unattended for extended lengths of time.
- If using the temperature start feature in an RV coach, set the air conditioner thermostat to match the *START TEMP °F* setting. If using two air conditioners, it is suggested that the second air conditioner thermostat be set 2°-5° higher than the first air conditioner. This staggered setting allows the first air conditioner to start and run in an effort to keep the coach cool. If the temperature continues to rise inside the coach, the second air conditioner turns on to further cool the coach.
- When the generator starts successfully, the *STATUS* indicator turns solid green. The generator runs until the *RUN TIME HOURS* setting is reached, at which time a stop signal is sent to the generator.
- If the generator is running when either switch is placed in the *TEST* position, the generator stops and then starts again. The generator then runs for approximately 30 seconds before shutting off.
- There is a two minute delay before the AGS attempts to start the generator if the voltage to the AGS controller falls to the *START VOLTS DC* setting. There is no delay if the AGS attempts to start the generator when the temperature around the remote switch rises to the *START TEMP °F* setting.

5.0 Troubleshooting

The two LED indicators on the front of the AGS controller indicate how the AGS is operating and can help troubleshoot the AGS system. The *STATUS* indicator is a bi-color (green or red) LED to indicate the AGS status. The *READY* indicator is a green LED to indicate if the AGS has power and if the remote switch is connected (Table 5-1).

The AGS controller will perform a self test when power is first applied. The green *READY* indicator comes on (solid), and at the same time the *STATUS* indicator flashes green once. If the self-test is successful, test the AGS system for proper operation by pressing and releasing the AGS remote switch to the *TEST* position. The *STATUS* indicator begins to flash green and the AGS should start the generator. Once the generator starts, the *STATUS* indicator should light solid green and the generator should run for approximately 30 seconds—and then shut off. If the generator does not start and stop as expected, refer to the troubleshooting chart below.

WARNING: Completely unplug the green 8-port terminal block from the AGS before servicing the electrical/generator system to prevent harm to servicing personnel.

Table 5-1, Troubleshooting Guide

LED Indication	Symptom	Solution
STATUS is *ON* red = Gen Fault	1) Gen won't start; or, 2) Gen won't run. Starts, but is stopped by AGS (B+ or run sense voltage not sensed to Terminal #2)	Check gen to AGS start wiring; or check B+ wiring from gen to AGS. Measure DC voltage from Terminal 2 (+) to Terminal 4 (–), ensure DC voltage is 10-40 volts only when the generator is running. Switch *OFF*, then *ENABLE* to reset.
STATUS flashing green = gen start initiated	Gen start initiated	No problem – normal operation.
STATUS is *ON* (solid) green = Gen Run	Gen started OK	No problem – normal operation.
READY is *OFF* = no power to AGS	DC voltage to Terminals 3 (+) & 4 (–) incorrect	1) Check battery voltage. 2) Check fuse. 3) Check DC wiring.
READY is flashing = remote switch is not connected	Remote control switch not sensed or plugged into the REMOTE port	1) Check communications cable connection to remote and controller, or 2) Try a different 6-conductor telephone cable (see Figure 2-5). Switch *OFF*, then *ENABLE* to reset.
READY is *ON* (solid) = power connected	Remote switch connected to REMOTE port	No problem – normal operation.

A-1 Appendix

A-1.1 Optional Accessories for the ME-AGS-S

The following two pigtail adapters are available from DMX Power for use with the ME-AGS-S. They are used in applications where there is a requirement to automatically turn the generator on/off externally through a manually controlled switch, or from an automatically controlled switching device (i.e., using the AC thermostat controls to turn the generator on to run the air conditioner).

- **ME-PT1:** (Pigtail one-wire) adapter allows the AGS to start the generator when an external +12 volt DC supply is applied.
- **ME-PT2:** (Pigtail two-wire) adapter allows the AGS to start the connected generator by an external two-contact switch.

A-1.2 Additional Magnum Equipment/Accessories

MS Series Inverter/Chargers

The MS Series inverter/charger is a pure sine wave inverter designed specifically for mobile and off-grid applications. The MS Series has a built-in PFC (Power Factor Corrected) charger that uses 25-30% less AC current than standard chargers. The MS Series also provides multiple ports, including an RS485 communication port for network expansion, and a remote port.

MMP Series Enclosures

The MMP175-30D, MMP175-60S, MMP250-30D, and MMP250-60S enclosures are specifically designed for single inverter applications. The MMP Series enclosures combine all major components required for a renewable energy system—inverter/battery disconnect, AC overcurrent protection, grounding connections, and a full system inverter bypass—into a single, easy to install pre-wired enclosure.

Advanced Remote Control Display

The ME-ARC allows advanced features of the DMX Power inverter or accessory to be configured. This LCD remote display has a FAVS button to access your favorite features quickly, and provides advanced monitoring/troubleshooting.

Basic Remote Control Display

The ME-RC remote control is an easy-to-read LCD screen and “at a glance” LEDs display complete inverter/charger status. Soft keys provide simple access to menus and a rotary encoder knob allows you to scroll through and select a wide range of settings such as INVERTER ON/OFF, CHARGER ON/OFF, SHORE power breaker setting, AGS control, and METER, SETUP, and TECH menus.

Battery Monitor

The Battery Monitor Kit (ME-BMK) is a single battery bank amp-hour meter that monitors the condition of the battery and provides information to let you know how much energy you have available. It also lets you plan your electrical usage to ensure the battery is not being over-discharged.

MAGNUM ENERGY

DMX POWER

64-000F E Owner’s Manual, ME-AGS-S