MAGNUM ENERGY

ME-RC

Standard Remote Control

Owner's Manual

DMX POWER

Disclaimer of Liability

The use of this manual and the conditions or methods of installation, operation, use, and maintenance of the ME-RC remote is beyond the control of DMX Power. Therefore, this company does not assume responsibility and expressly disclaims liability for loss, damage, or expense whether direct, indirect, consequential or incidental that may arise out of or be any way connected with such installation, operation, use, or maintenance.

Due to continuous improvements and product updates, the images shown in this manual may not exactly match the unit purchased.

Restrictions on Use

The ME-RC remote may only be used in life support devices and systems with the express written approval of DMX Power. Failure of this inverter can reasonably be expected to cause failure of that life support device or system, or to affect the safety or effectiveness of that device or system. If the ME-RC remote fails, it is reasonable to assume the health of the user or other persons may be endangered.

Copyright Notice

Copyright 2025 by DMX Power. All rights reserved. Permission to copy, distribute, and/or modify this document is prohibited without express written permission from DMX Power.

Document Information

Description – ME-RC Series Owner's Manual
Part Number and Revision – 64-0003 Rev K
Date Published – October 2025

For the latest version of DMX documentation including this manual see the documentation menu on our website at: www.dmx-power.com

Contact Information

DMX Power
Phone (Toll-Free): 800-553-6418 or 651-653-7000
Technical Questions: support@dmx-power.com
Warranty or RMA: warranty@dmx-power.com
Web: www.dmx-power.com

Statement of Appreciation

Thank you from all of us at DMX Power for purchasing this ME-RC remote.

At DMX Power, we are committed to providing you with quality products and services, and hope that your experience with us is pleasant and professional.

Important Product Safety Instructions

This manual contains safety instructions that must be followed during the installation and operation of this product. Read all instructions and safety information contained in this manual before installing or using this product.

Safety Symbols

To reduce the risk of electrical shock, fire, or other safety hazard, the following safety symbols have been placed throughout this manual to indicate dangerous and important safety instructions.

WARNING: Indicates that failure to take a specified action could result in physical harm to the user.

CAUTION: Indicates that failure to take a specified action could result in damage to the equipment.

Info: Indicates information that emphasizes or supplements important points of the main text.

Remedy: Provides possible solutions for related issues.

Product Safety Alerts

All electrical work must be performed in accordance with local, state, and federal electrical codes.

WARNINGS:

- This product is designed for indoor/compartment installation. It must not be exposed to rain, snow, moisture, or liquids of any type.
- Use insulated tools to reduce the chance of electrical shock or accidental short circuits.
- Remove all jewelry such as rings, watches, bracelets, etc., when installing or performing maintenance on the inverter.
- Always disconnect the batteries or energy source prior to installing or performing maintenance on the inverter. Live power may be present at more than one point since an inverter utilizes both batteries and AC - turning off the inverter may not reduce this risk. As long as AC power is connected, it will pass thru the inverter regardless of the power switch on the inverter or the ON/OFF INVERTER button on the remote.

Table of Contents

1.0 Introduction 1

2.0 Installation 2

2.1 Pre-Installation 2
2.1.1 Installation Guidelines 2
2.1.2 Unpacking and Inspection 2
2.1.3 Tools Required 2
2.2 Connecting the Remote Cable 3
2.2.1 Connecting the ME-RC to a Magnum Inverter 3
2.3 ME-RC Remote Dimensions 4
2.4 Mounting the ME-RC Remote 4
2.4.1 Flush Mount Installation Procedure 5
2.5 Power-up Self Test 6

3.0 Setup 7

3.1 Navigating the Remote 7
3.2 Remote Feature to Inverter Compatibility 9
3.3 Remote Buttons and Menu Items 13
3.3.1 SHORE Button 13
3.3.2 AGS Menu 15
3.3.3 METER Menu 16
3.3.4 SETUP Menu 20
3.3.5 TECH Menu 37

4.0 Menu Map: ME-RC Remote Control 42

5.0 Operation 45

5.1 Front Panel 45
5.1.1 LED Indicators 45
5.1.2 LCD Display 45
5.1.3 ON/OFF Pushbuttons 46
5.1.4 Menu Buttons 46
5.1.5 Rotary SELECT Knob 46
5.2 Operating the Inverter/Charger 47
5.2.1 Inverter Mode 47
5.2.2 Charger Mode 47
5.3 System Status Messages 48
5.3.1 Inverter Mode Status Messages 49
5.3.2 Charger Mode Status Messages 49
5.3.3 Fault Mode Messages 53
5.3.4 LED Indicator Guide 57

6.0 ME-RC Remote Troubleshooting 58

6.1 Inverter/Charger Troubleshooting Tips 59
6.1.1 Inverter Problems 59
6.1.2 Charger Problems 59
6.2 Performing an Inverter Reset 60
6.3 Performing a Power Reset 60

Table of Contents (Cont.)

7.0 Using an AGS 61
7.1 AGS Setup 61
7.2 AGS Functional Tests 65
7.2.1 Remote to Generator Communication Test 65
7.3 AGS Operation/Monitoring 65
7.3.1 Controlling the AGS using the ME-RC 65
7.3.2 Monitoring the AGS using the ME-RC 66
7.4 Enabling the AGS using the ME-RC 68
7.5 Starting/Stopping the Generator using ME-RC 68
7.6 AGS Menu Map using the ME-RC 69
7.7 AGS Remote Status Messages 71
7.7.1 AGS Remote Operational Statuses 71
7.7.2 AGS Remote Start Statuses 72
7.7.3 AGS Remote Fault Statuses 72
7.7.4 General AGS Operational Notes 72
7.8 Troubleshooting the AGS with the ME-RC 73
7.8.1 AGS Fault Message Screens for the ME-RC Remote 73
7.8.2 Resolving Operational Statuses 74
7.8.3 Resolving Fault Statuses 74
7.8.4 How to Clear AGS Faults 75
8.0 Using a BMK 76
8.1 Setting Up the BMK using the ME-RC 76
8.1.1 Charge Efficiency Setting 76
8.1.2 Batt AmpHrs Setting 78
8.2 ME-RC50 Remote's BMK METER Menu Maps 79
8.3 Operating the BMK using the ME-RC 80
8.3.1 How the Battery Monitor (ME-BMK) Operates 80
8.4 ME-RC METER Menu Items and Settings for BMK 80

List of Tables

Table 3-1, ME-RC (Revision 2.9) Compatibility Matrix 9
Table 3-2, Battery AmpHrs Capacity to Suggested Absorb Time 22
Table 3-3, Battery Size to Battery AmpHrs (estimated) 23
Table 3-4, Battery Type to Charge Voltages 29
Table 3-5, ME-RC's Inverter/Charger Default Settings 39
Table 5-1, LED Indicator Guide 57
Table 6-1, Remote Control Troubleshooting Guide 58
Table 7-1, ME-RC Autostart/Autostop Matrix 61
Table 7-2, Battery AmpHrs Capacity to Suggested Gen Run Time 62
Table 7-3, AGS Remote Operational Statuses 71
Table 7-4, AGS Remote Start Statuses 72
Table 7-5, AGS Remote Fault Statuses 72

List of Figures

Figure 1-1, Front Panel Features 1
Figure 2-1, Remote Cable 3
Figure 2-2, Remote Control Connections 3
Figure 2-3, ME-RC Remote Dimensions 4
Figure 2-4, Flush Mounting the ME-RC 5
Figure 2-5, Power-up Self Test Screens 6
Figure 2-6, Example: ME-RC Home Screen 6
Figure 3-1, Front Panel Setup Features 7
Figure 3-2, SETUP Menu Navigation 8
Figure 3-3A, SHORE: Shore Max Selection 13
Figure 3-3B, SHORE: Shore Max2 (Dual-source Models Only) 14
Figure 3-4, AGS Menu Display 15
Figure 3-5, METER: 01 INV/CHG Meter Display 16
Figure 3-6, Current Flow – Inverter Mode 18
Figure 3-7, Current Flow – Standby Mode 19
Figure 3-8, Current Flow – Load Support Mode 19
Figure 3-9, SETUP: 01 Search Watts Selections 20
Figure 3-10, SETUP: 02 LowBattCutOut Selections (12v) 21
Figure 3-11, SETUP: 03 Absorb Time Selections 22
Figure 3-12, SETUP: 04 Battery Type Selections 24
Figure 3-13, Done Time/Amps Charge Stages 27
Figure 3-14, Hold VDC Charge Stages 27
Figure 3-15, SETUP: 05 Charge Rate Selections 30
Figure 3-16, SETUP: 06 VAC Dropout Selections 31
Figure 3-17, SETUP: 07 Power Save Selections 32
Figure 3-18, SETUP: 08 Screen Setup Selections 32
Figure 3-19, Final Charge Stage - Multi-Stage 33
Figure 3-20, Final Charge Stage - Float Stage 34
Figure 3-21, Final Charge Stage - Silent Stage 35
Figure 3-22, TECH: 01 Temperatures Display 37
Figure 3-23, TECH: 02 Revisions Display 37
Figure 3-24, TECH: 03 Inv Model Display 38
Figure 3-25, TECH: 04 Load Defaults Selection 38
Figure 3-26, TECH: 05 Ext Control Display 40
Figure 3-27, Example: Ext Control Scrolling Screens 40
Figure 4-1, Inverter/Charger Menu Map 42
Figure 4-2, Inverter/Charger Menu Map 43
Figure 4-3, Inverter/Charger Menu Map 44
Figure 5-1, ME-RC Front Panel Controls and Indicator 45
Figure 5-2, System Status Screen (Example) 48
Figure 6-1, Performing an Inverter Reset 60
Figure 7-1, ME-RC's AGS Configuration Access Buttons 61
Figure 7-2, AGS Menu Maps in ME-RC Remote (Section 1) 69
Figure 7-3, AGS Menu Maps in ME-RC Remote (Section 2) 70
Figure 7-4, Example: AGS Fault Message on ME-RC Remote 73
Figure 8-1, Accessing the BM Setup Menu 76
Figure 8-2, Changing the Charge Efficiency Setting 77
Figure 8-3, Adjusting the AmpHour Size 78
Figure 8-4, ME-RC50 METER Menu Map (Displays w/BMK Settings) 79

1.0 Introduction

The ME-RC remote control allows you to monitor and customize the operating parameters for your Magnum inverter/charger. This remote can be used on all Magnum inverter/charger models so there is no cross-platform confusion.

The ME-RC remote (PN: ME-RC50) comes standard with a 50-foot, 4-conductor (twisted-pair) telephone cable and includes nonvolatile memory (preserves adjustable settings, even if power to the remote or inverter is removed).

Info: This manual is for the ME-RC with revision 2.9 or higher; see the *TECH: 02 Revisions* display on page 37 for information on how to determine your revision level.

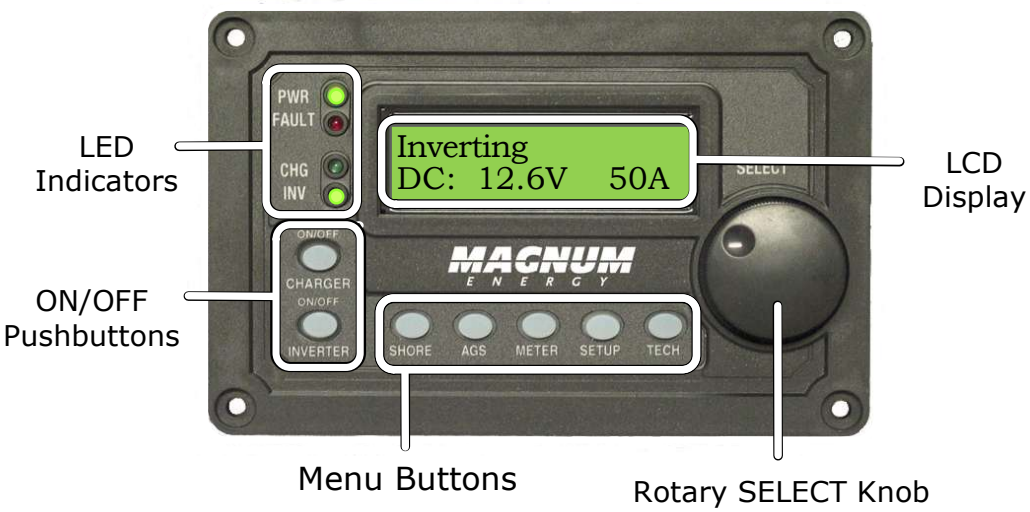

Figure 1-1, Front Panel Features

The ME-RC is equipped with the following features:

- **LED Indicators** – The at-a-glance LEDs provide the inverter/charger status in a straightforward way.
- **LCD Display** – The LCD display is a 16 x 2 line (32 characters total), alphanumeric display used for setting up the inverter/charger operation, as well as viewing current status or fault messages.
- **ON/OFF Buttons (x2)** – The ON/OFF buttons allow the inverter or charger to be independently and quickly enabled or disabled.
- **Menu Buttons (x5)** – The menu buttons allow the inverter or charger to be configured to your specific system preferences. These buttons also allow simple access to menu items that can help with monitoring and troubleshooting your inverter/charger system.
- **Rotary SELECT Knob** – The rotary encoder knob is similar to a car dash radio knob and is used to quickly scroll through and select various menu items and settings. Pushing this rotary knob allows you to select a menu item, or to save a setting once it is displayed on the LCD.

2.0 Installation

Review this section and the Important Product Safety Instructions on page ii before proceeding with the installation of your remote.

WARNING: Installations should be performed by qualified personnel, such as a licensed or certified electrician. The installer determines which safety codes apply and ensures all applicable installation requirements are followed. Applicable installation codes vary depending on the specific location and application.

CAUTION: When connecting battery power to the inverter, all battery negative connections must be connected prior to the battery positive connections. When removing battery power from the inverter, the battery positive should be removed before any battery negative connections are disconnected. This prevents any communication chips/lines from becoming the DC return path to the battery—causing permanent damage to all connected accessories.

Summation: Ensure all battery negative circuits are always connected before connecting or disconnecting battery positive.

2.1 Pre-Installation

Before proceeding, read the entire Installation section to determine how best to install your ME-RC remote. The more thorough you plan in the beginning, the better your inverter needs will be met.

2.1.1 Installation Guidelines

- Before connecting any wires, determine the remote's cable route throughout the home or vehicle/boat, both to and from the inverter.
- Always check for existing electrical, plumbing, or other areas of potential damage BEFORE drilling or cutting into walls to mount the remote.
- Make sure all wires have a smooth bend radius and do not become kinked.
- If installing this remote in a boat, RV, or truck ensure the conductors passing through walls, bulkheads, or other structural members are protected. This minimizes insulation damage (such as chafing) which can be caused by vibration or constant rubbing.

2.1.2 Unpacking and Inspection

Carefully remove the ME-RC remote from its shipping container and inspect all contents. Verify the following items are included:

- The ME-RC remote
- 50' remote cable
- Four #8 x 3/4 Phillips screws
- ME-RC Owner's Manual

If items appear to be missing or damaged, contact your authorized Magnum Energy product dealer or DMX Power. Save your proof-of-purchase as a record of your ownership; it is needed if the unit should require in-warranty service.

2.1.3 Tools Required

Installing the remote control is simple and requires the following tools:

- Phillips screwdriver
- Cut-out tool (knife/saw)
- Level
- Pencil
- Drill
- Drill Bit (7/64")

2.2 Connecting the Remote Cable

The ME-RC comes with a remote cable to enable communication between the inverter and the remote. The remote cable is a 50-foot, 4-conductor, round twisted-pair, telephony standard with 6P4C (6-position/4-conductor) connectors on each end. When the 6P4C connectors are held side by side with both of the connector tabs facing the same way, the color of the conductors in each connector is the opposite from top to bottom (see Figure 2-1).

Info: Twisted-pair cabling is a common form of wiring in which two conductors are wound around each other for the purpose of cancelling out electromagnetic interference (i.e., crosstalk).

Note: *The remote cable can be extended up to a length of 200 feet without data degradation.*

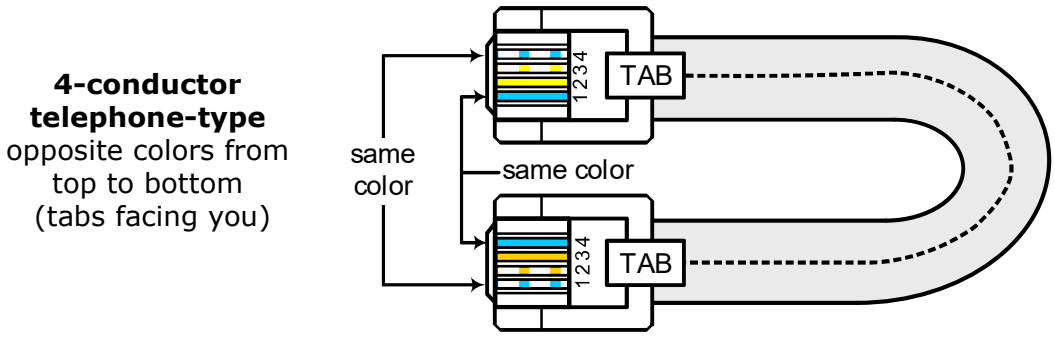

Figure 2-1, Remote Cable

2.2.1 Connecting the ME-RC to a Magnum Inverter

One end of the remote cable plugs into the back side of the ME-RC, and the other plugs into the REMOTE (blue) port on the Magnum inverter/charger (see Figure 2-2).

Note: *Connect the remote cable after mounting the remote as described in Section 2.4.*

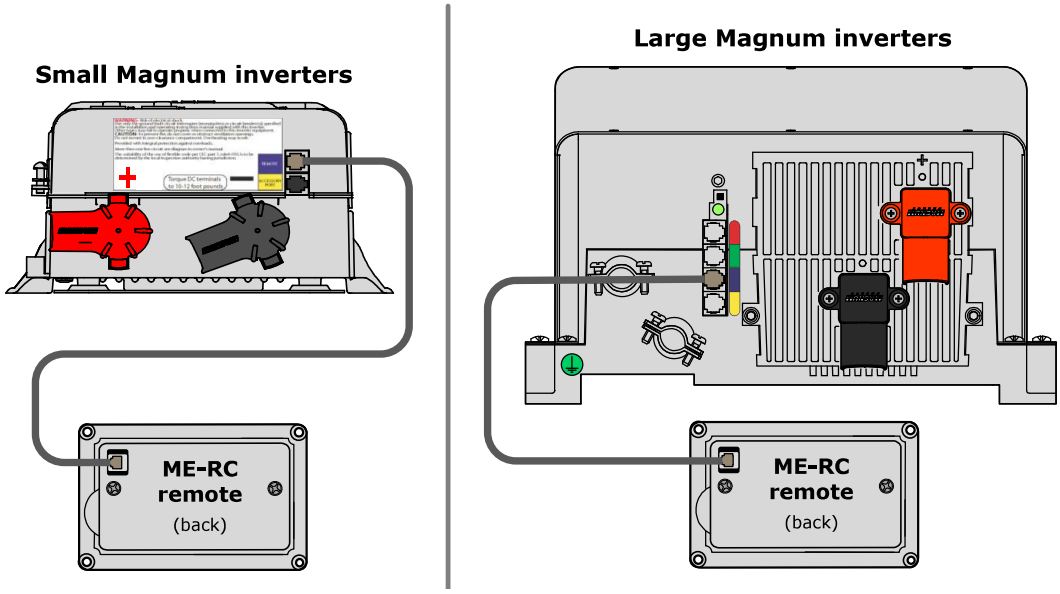

Figure 2-2, Remote Control Connections

2.3 ME-RC Remote Dimensions

Use the information below (Figures 2-3 and 2-4) in preparation for mounting the ME-RC remote. Directions for mounting follow in Section 2.4.

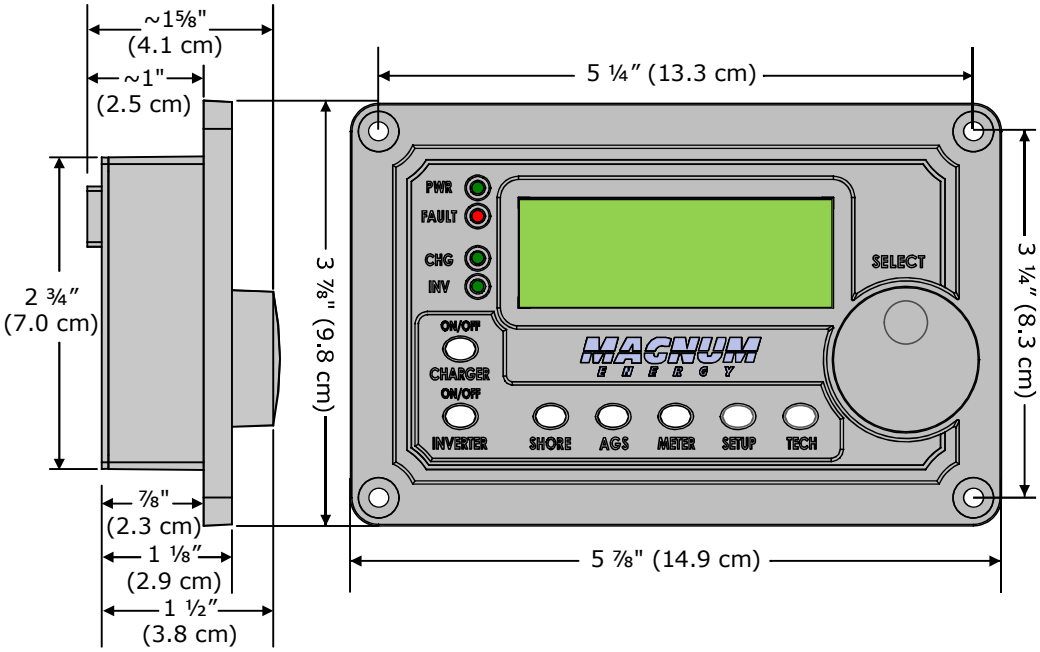

Figure 2-3, ME-RC Remote Dimensions

2.4 Mounting the ME-RC Remote

The ME-RC can be flush mounted through an opening in the wall. Find a location that is clean, dry and protected. Allow room to access the remote's SELECT knob and to view the LEDs/display.

CAUTION: Ensure that no AC power is connected to the inverter, and then according your inverter owner's manual correctly connect the inverter to the batteries.

CAUTION: Always check for hidden electrical wires, pipes and cables BEFORE drilling, cutting, or screwing into walls or cabinets.

Info: The ME-RC can be surface mounted on a wall using the optional ME-BZ (remote bezel).

2.4.1 Flush Mount Installation Procedure

To flush mount, the wall opening must have at least a 2” (5 cm) depth to allow room for the remote and the cable.

1. Cut an opening in the wall (Figure 2-4). Ensure there are no openings around the display and enough material for the screws to secure the unit.
2. Drill four pilot holes for the #8 x 3/4 screws that will attach the remote to the wall (refer to Figure 2-3 for remote hole locations and dimensions).
3. Route one end of the cable through the wall opening to the inverter/charger, and then plug it into the RJ11 REMOTE port (blue label) on the inverter/charger—inverter has DC power, but is OFF. See Figure 2-2.
4. Take the other end of the remote cable and while plugging it into the back of the ME-RC, view the remote’s display to ensure the Power-up Self Test initiates (see Section 2.5).
5. If the self test is successful, secure the ME-RC to the wall using the four supplied Phillips screws. If the self test is unsuccessful, refer to the Troubleshooting section.

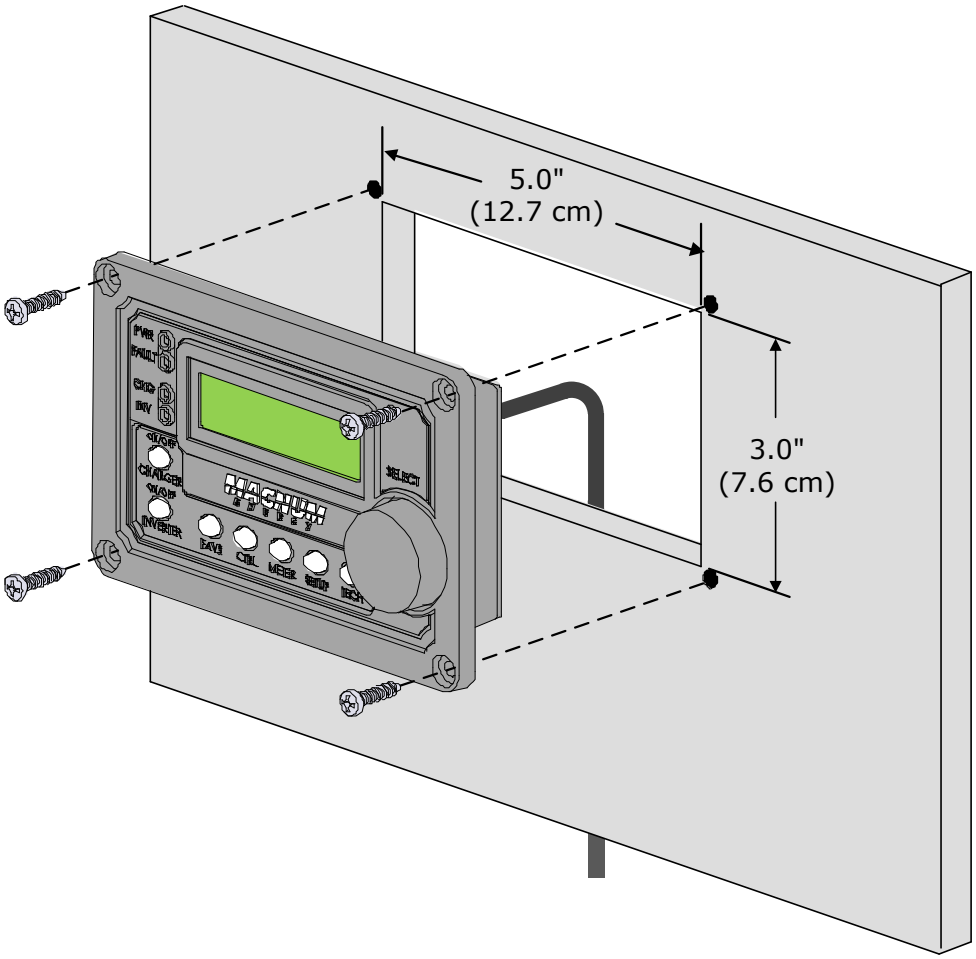

Figure 2-4, Flush Mounting the ME-RC

2.5 Power-up Self Test

Info: All power to operate the remote control is provided by the inverter/charger through the remote cable.

When the ME-RC is first connected to an inverter, a power-up self test is performed. The LCD automatically displays the following screens (Figure 2-5):

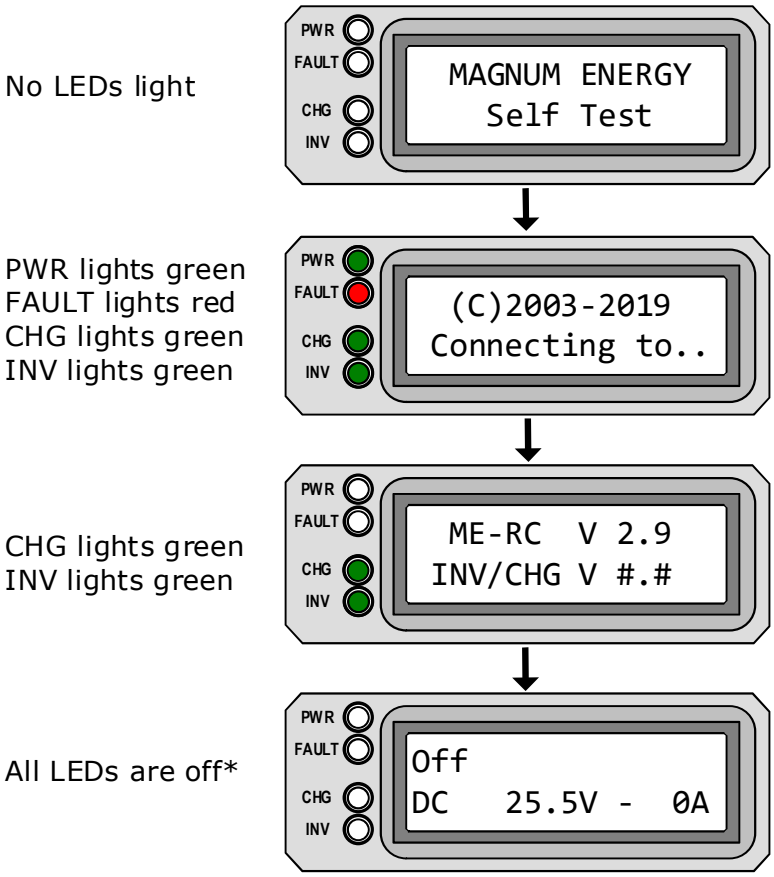

** If the Power-up Always feature is enabled and DC is reconnected to the inverter, the inverter will turn on automatically once the self test is complete*.

Figure 2-5, Power-up Self Test Screens

After five minutes without a button being pressed, the remote displays the ME-RC's home screen (see example below).

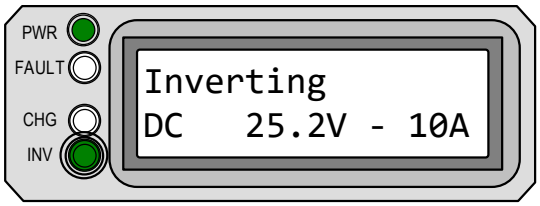

Top line: Current status of inverter

Bottom line: Voltage from the batteries connected to the inverter, and the battery current used by the inverter

Figure 2-6, Example: ME-RC Home Screen

3.0 Setup

When the remote is connected to a Magnum inverter/charger, the settings in the remote control determine the inverter/charger's operating parameters. The default settings in the remote control are adequate for most installations (see Table 3-5); however, you have the option to change some of the operating parameters. This section shows you how to navigate the remote and gives you an understanding of the function of each adjustable setting.

3.1 Navigating the Remote

The ME-RC has menu items and adjustable settings that provide the ability to configure your inverter/charger to your specific parameters.

Info: See Figures 4-1 through 4-3 for complete maps of the inverter/charger's menu items and adjustable settings.

Familiarize yourself with the display and controls on the remote's front panel that are used to find, adjust, and save the desired settings (see Figure 3-1).

- **LCD Display** – The 2-line LCD display shows status and information for the inverter/charger and any attached accessories. All setup menus and faults also appear on the LCD display.

Info: The LCD display returns to the remote home screen to show DC voltage and current (see Figure 2-6) after 5 minutes—if no buttons have been pressed.

Info: When the ← (left facing arrow) symbol is shown on the display, the displayed setting has been selected and will be used.

- **Menu Buttons (x5)** – These five buttons allow simple access to menu items that can help with configuring, monitoring, and troubleshooting your inverter/charger system.
- **Rotary SELECT Knob** – This rotary knob allows you to quickly scroll through and select various menu items and settings. Pressing the knob selects the menu item to change, or saves the current selection.

Info: Hold down the SELECT button for 10 seconds to refresh the LCD display.

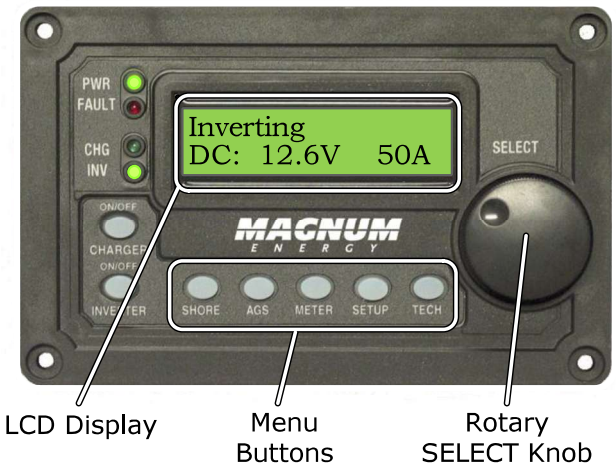

Figure 3-1, Front Panel Setup Features

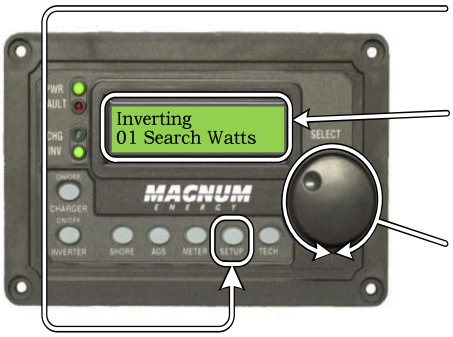

1. Press the **SETUP** menu button.

Bottom line shows a menu heading.

2. Turn the **SELECT** knob to the desired menu item.

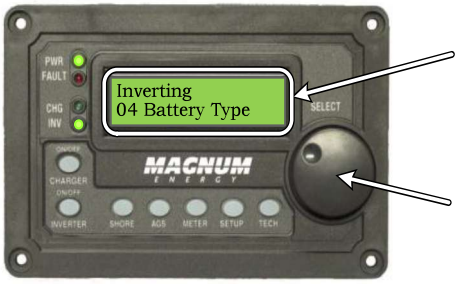

When the bottom line shows the desired menu heading:

3. Press the **SELECT** knob.

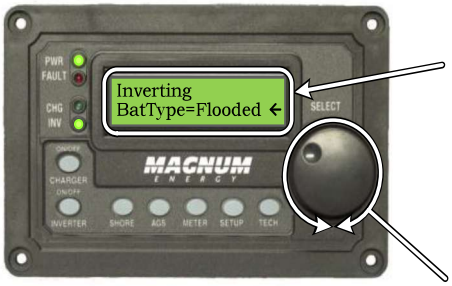

Bottom line shows current setting.*

*[If this setting is correct, rotate the **SELECT** knob to continue to the next menu item.]

4. Press the **SELECT** knob to change the desired setting.

Rotate the **SELECT** knob to the desired setting.
When the bottom line shows the desired setting:

5. Press the **SELECT** knob to save this setting.

Figure 3-2, SETUP Menu Navigation

3.2 Remote Feature to Inverter Compatibility

The ME-RC has many settings and is designed to work with the standard features in your Magnum inverter—and/or other Magnum devices (i.e., ME-AGS-N or ME-BMK). The ME-RC communicates with your inverter to allow the set up and enabling of these standard features. However, when the ME-RC is released with new software, some of the features and functionality in the remote may not be available in an inverter or networked accessory that has an earlier software level. In this case, the setting is not recognized and will not function. Use the steps below to help you determine which ME-RC (Revision 2.9) menus/features are compatible with your inverter.

1. Obtain your inverter's software revision.
   Note: *To view the inverter's software revision level, go to the TECH menu on your remote and access the Revisions menu.*
2. Go to the Magnum Remote Compatibility page at www.dmx-power.com to determine your inverter's compatibility level (L1, L2, L3, L4, or L5).
3. Use Table 3-1 to determine which ME-RC features/settings you want to use, and what inverter compatibility level is required (see the "Inverter Level Required" column in Table 3-1).
4. If your inverter compatibility level is the same or greater than the level required, your inverter can support the setting/feature you want.

Info: The ME-RC compatibility matrix below is also available at www.dmx-power.com to download/print as a single page document.

Table 3-1, ME-RC (Revision 2.9) Compatibility Matrix

Button	FEATURES/SETTINGS			Inverter Level Required	Default Setting
	Menu Heading	Menu Item	Selections/ Adjustments Range		
SHORE	Shore Max		5 - 60A	≥Level 1 [1]	30A**
SHORE	Shore Max2		5 - 60A	Dual Source Inverter Models	30A**
AGS	01 AGS Control	AGS=	OFF, Enable, Test, Enable w/QT (Set Time)	≥Level 1	OFF**
AGS	02 AGS Status	AGS:	Read only display	≥Level 1	Read Only
AGS	03 Run Time Hour	Run Time=	0.5 - 25.5 Hours	≥Level 1	2.0 Hrs
AGS	04 Start Temp F	Start Temp=	OFF, Ext Input, 65 - 95F	≥Level 1	OFF
AGS	05 Start Volts	Start VDC=	OFF, 10.0 - 12.2*	≥Level 1	11.0
AGS	06 Set Time	Hour=	01:xxx-12:xxx	≥Level 1	12:00A
AGS		Minute=	xx:00x-xx:59x		
AGS		AM-PM=	xx:xxA-xx:xxP		
AGS	07 Quiet Time	Quiet=	OFF, 9PM- (7AM/8AM/9AM), (10PM/11PM) - 8AM	≥Level 1	OFF

Button	FEATURES/SETTINGS			Inverter Level Required	Default Setting
	Menu Heading	Menu Item	Selections/ Adjustments Range		
AGS (Cont.)	08 AGS TECH	Gen Run:	Read only display	≥Level 1	Read Only
		AGS VDC:	Read only display	≥Level 1	Read Only
		Temp:	Read only display	≥Level 1	Read Only
		AGS Rev:	Read only display	≥Level 1	Read Only
		AGS Mode:	=RV, Other	≥Level 1	RV
METER	01 INV/ CHG Meter	DC:	##.#V ##A (Read only display)	≥Level 1	Read Only
		VAC Out:	###VAC (Read only display)	≥Level 4	Read Only
		Hz Out:	##.#Hz (Read only display)	≥Level 4	Read Only
		Load Amps:	##AAC (Read only display)	≥Level 4 [3]	Read Only
		Input Amp:	##AAC (Read only display)	≥Level 4 [3]	Read Only
		I/C Amps:	##AAC (Read only display)	≥Level 4 [3]	Read Only
		AC Input:	###V (Read only display)	MSH Models	Read Only
		AC2 Input:	###V (Read only display)	Dual Source Inverter Models	Read Only
	02 BM: SOC	Batt SOC	Read only display	≥Level 1 [5]	Read Only
	03 BM: Meters	DC Volts:	Read only displays	≥Level 1 [5]	Read Only
		DC Amps:			
		AH I/O:			
		rAH Out:			
		tAH Out:			
	04 BM: Status	BM:	Read only display	≥Level 1 [5]	Read Only
	05 BM: Setup	BM Charge Eff:	Chg Eff= Auto, 50-97%	≥Level 1 [5]	Auto
		BM Amp Hours:	Batt Amphr = 200 - 2500	≥Level 1 [5]	400
	06 BM: TECH	BM Rev:	Read only display	≥Level 1 [5]	Read Only
		Min DC:	Read only display (press SELECT to reset)	≥Level 1 [5]	Read Only
		Max DC:	Read only display (press SELECT to reset)	≥Level 1 [5]	Read Only

Button	FEATURES/SETTINGS			Inverter Level Required	Default Setting
	Menu Heading	**Menu Item**	**Selections/ Adjustments Range**		
SETUP	01 Search Watts	Search=	OFF, 5 - 50W	≥Level 1	5W
	02 Low Batt CutOut	LBCO=	9.0 - 12.2 VDC*	≥Level 1	10.0 VDC
			9.0 - 13.0 VDC*	≥Level 5	
	03 Absorb Time	Absorb Hrs=	0.1 - 25.5 Hrs	≥Level 4[4]	1.5 Hrs
	04 Battery Type	BatType=	Gel, Flooded, AGM1, AGM2	≥Level 1	Flooded
			Custom [2]		
			Absorb = (12.0 - 16.0V)*	≥Level 3	14.4V
			Float = (12.0 - 16.0V)*		13.2V
			Equalize = (12.0 - 16.0V)*		15.6V
			CC/CV		
			Max Amps = (OFF, 20 - 990A)	≥Level 3	200A
			Chg Volts = (12.0 - 16.0V)*		13.8V
			EndChg = (Time, DC Amps, Hold VDC)		Time
			EndChg = Time		
			DoneTime = (0.1 - 25.5 Hrs)	≥Level 4 [4]	1.5Hrs
			MaxTime = (OFF, 0.1-25.5)		12.0Hrs
			Recharge = (12.0-16.0V)*		12.0V
			EndChg= DC Amps		
			DoneAmps = (0 - 250ADC)	≥Level 4	20ADC
			MaxTime = (OFF, 0.1-25.5)		12.0Hrs
			Recharge = (12.0-16.0V)*		12.0V
			Hold VDC	≥Level 1	14.6V
			LFP	≥Level 5	
	05 Charge Rate	Max Charge=	0 - 100%	≥Level 3	80%
			10 - 100%	≥Level 2	
	06 VAC Dropout	Dropout=	US Models: 60 - 100 VAC, UPS Mode	≥Level 1	80 VAC
			Export Models: 110 - 190 VAC, UPS Mode	≥Level 1	150 VAC
		Drop-out2=	US Models: 60 - 100 VAC, UPS Mode	Dual-source Models only	80 VAC

Button	FEATURES/SETTINGS			Inverter Level Required	Default Setting
	Main Heading	**Menu Item**	**Selections/ Adjustments Range**		
SETUP (Cont.)	07 Power Save	PwrSave=	OFF, 1 - 60 Minutes	≥Level 1	15min
	08 Screen Setup	Contrast=	0 - 100%	≥Level 1	100%**
		Brightness=			50%**
	09 Final Charge	Final=	Multi, Float, Silent	≥Level 4	Multi
			Silent / Rebulk = (12.0-16.0V)*		12.0V
	10 Pwr Up Always	Pwr Up=	YES, NO	≥Level 1	NO
	11 Bulk Always	Bulk Always=	ON, OFF	≥Level 1	OFF
TECH	01 Tem-peratures	BTS:	Read only displays	≥Level 1	Read Only
		Tfmr:			
		FETs:			
		AGS:			
	02 Revi-sions	Inverter:	Read only displays	≥Level 1	Read Only
		Remote:			
		AGS:			
		BMK:			
		Router:			
	03 Inv-Model	Model:	Read only display	≥Level 1	Read Only
	04 Load Defaults	Defaults in x.xs	Press SELECT (x5 secs) for default settings	≥Level 1	Read Only
	05 Ext Control	VAC Dropout:	Read only display ("INT" or "EXT")	≥Level 1	Read Only
		Charge Rate:			
		Shore Max:			
	06 Set PIN	SETUP=	Locked, Unlocked, Change PIN (PIN= 0000)	≥Level 1	Unlocked

** 12-volt values shown; they are different for 24v and 48v inverters.*

*** These settings return to factory default when power to remote is removed.*

ME-RC Compatibility Matrix Notes:

[1] Not available on MM/MM-E/MM-AE/MMS/MMS-E/MMSA/MMA models.

[2] AC Couple mode can be activated using Battery Type: Custom, only with MS-PAE Series ≥Rev 4.1 or MS/MS-PE Series ≥5.0.

[3] The AC amps displays are not shown unless connected to MS-RV, MS-PAE, MS-PE or MSH Series models.

[4] Level 2 and 3 inverters can be used, but Level 2 inverters are limited from 1.0 hour to 4.5 hours, Level 3 inverters <Rev 4.1 are limited from 1.0 to 6.5 hours; and Level 3 inverters ≥Rev. 4.1 (and MMS Rev 1.5) are limited from 1.5 to 6.5 hours; any setting outside these limited ranges are not recognized and reverts to the inverter's default absorption time (2.0 hours).

[5] BM/SOC features require the ME-BMK (Battery Monitor Kit) to be installed.

3.3 Remote Buttons and Menu Items

The five menu pushbuttons (SHORE, AGS, METER, SETUP, or TECH) allow the inverter/charger system to be configured to your specific preferences. These menus also allow you to access menu items that can help with monitoring and troubleshooting your system.

This section covers each menu button's function and its various configurable settings. This helps to optimize the operation of the inverter/charger.

3.3.1 SHORE Button

This menu button enables you to quickly change your *Shore Max* setting to coordinate with the circuit breaker rating from the incoming AC source.

- **SHORE: Shore Max** – This setting determines the level in AC amps at which the inverter/charger begins to back off the battery charger to reduce the load on the incoming AC power. Whenever the incoming AC is connected and passing thru the inverter, the incoming AC current that is used to power the AC loads and charge the batteries is monitored. If this current begins to approach the *Shore Max* setting, the battery charger current is automatically reduced. This ensures the AC loads have all the current that the incoming AC power can provide.

If using a MSH (Hybrid) Series inverter, the *Shore Max* setting will also determine when the battery current begins to operate in parallel with the incoming AC power to support the inverter loads, known as Load Support. The Load Support feature uses additional power from the inverter's battery to run loads greater than what the incoming AC power can run alone, and prioritizes the power of any external DC source (e.g., alternator, solar, etc.,) over the incoming AC power to run inverter loads. For more information, see the Load Support Mode section in the Owner's Manual of the MSH models.

<u>Setting for all models except dual-source inverters</u>:

- ◇ **Shore Max**

  Default setting: *30 Amps*

  Ranges: *5-60 Amps (5 amp increments from 5 Amps to 20 Amps, and 10 amp increments from 20 Amps to 60 Amps).*

<u>Setting for dual-source inverters (i.e., MSH4024RE)</u>:

- ◇ **Shore Max** (AC1 input) and **Shore Max2** (AC2 input)

  Default settings: Shore Max *=30 Amps, Shore Max2=30 Amps*

  Ranges: *5-60 Amps (5 amp increments from 5 Amps to 20 Amps, and 10 amp increments from 20 Amps to 60 Amps).*

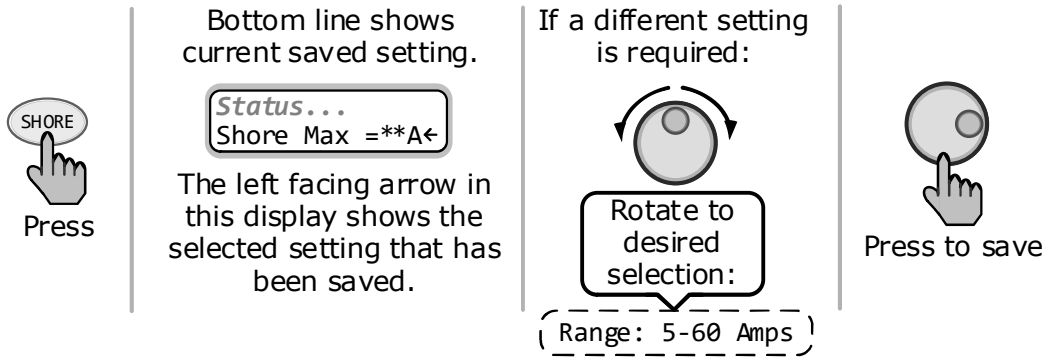

Figure 3-3A, SHORE: Shore Max Selection

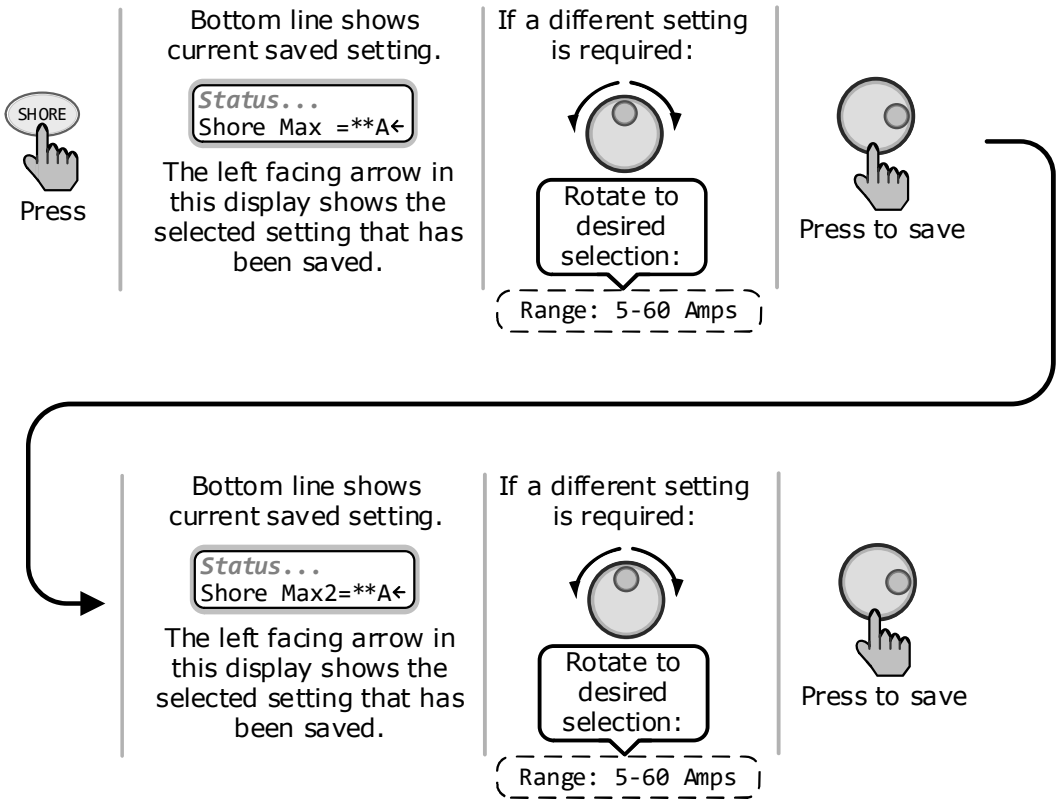

Figure 3-3B, SHORE: Shore Max2 (Dual-source Models Only)

CAUTION: Unless you have an MS Hybrid Series inverter/charger—which has the Load Support feature—the Shore Amps setting only limits the current to the battery; it does not limit the current to the inverter loads. If the current from the loads on the output of the inverter is greater than the circuit breaker rating on the incoming AC source, you will experience nuisance tripping.

Info: The *Shore Max* feature is not available on the MM or MMS Series (i.e., MM/MM-E/MM-AE/MMS/MMS-E models) inverters.

Info: If you are supplying two AC sources (utility and generator) to the inverter's single input through an AC transfer switch, adjust the *Shore Max* setting to the smaller AC circuit breaker size of the two AC sources.

Info: The *Shore Max* setting is dependent on the stability of the AC source. If using a generator, factors such as altitude and output voltage regulation may require a lower setting than the generator's circuit breaker size. For best performance, lower the *Shore Max* setting to 1/3 of the generator's rated capacity, and then while the generator is heavily loaded, gradually increase the setting as high as possible while ensuring the generator's output voltage level stays above the SETUP/*06 VAC Dropout* setting.

Where should I set the Shore Max setting? The *Shore Max* setting needs to be set to match the current rating of the utility power or the generator's circuit breaker that is connected to the inverter. This controls the input current differently depending on the inverter/charger model—as described below:

ME, MS, and RD Series: These models connect to a single AC source and have two inputs (HOT IN 1 and HOT IN 2), but the current is only monitored on HOT IN 1. On these models—when wired as a dual-in configuration or as a single-in configuration with only the HOT IN 1 connected—the Shore Max setting should be set to the size of the AC circuit breaker that feeds the HOT IN 1 input. On these models, when wired as a single-in configuration with HOT IN 1 and HOT IN 2 jumped together, set the Shore Max setting to half (x½) the input breaker size—as half the current passes through HOT IN 1 and the other half through HOT IN 2 simultaneously.

MS-AE and MS-PAE Series: These models connect to a single AC source and have two inputs (HOT IN 1 & HOT IN 2), with the current monitored on both inputs at the same time. Since the input is from a single AC source, both of the input currents are added, then divided in half to determine the Shore Max setting. If the input breaker is a dual-pole (120/240 VAC input), set the Shore Max setting to the value of only one of the breaker poles (i.e., 30A dual-pole = 30A setting). If the input breaker is a single-pole (120 VAC input) and connected to only one input, set the Shore Max setting to one-half the input breaker size (i.e., 30A single-pole = 15A setting).

MS-E, MS-PE, MSH-M, MSH-RV and RD-E Series: These models connect to a single AC source and have one input. Set the Shore Max setting to match the input AC circuit breaker size.

Dual Source Inverters (i.e., MSH4024RE): These inverters have two separate inputs (AC1 & AC2), with the current monitored on each input separately. The *Shore Max* setting is set to the size of the utility breaker feeding the AC1 input, and the *Shore Max2* setting is set to the size of the gen's breaker feeding the AC2 input.

MM, MM-AE and MMS Series (and any export version of these models): These models do not monitor current on the input, therefore cannot benefit from the *Shore Max* setting or feature. On these models, even though the *Shore Max* setting may display and allow selection/adjustment, this setting does not do anything to reduce the battery charger current

3.3.2 AGS Menu

The AGS button allows an optional Auto Generator Start – Network (AGS-N) controller (if installed and networked) to be configured to your specific system preferences, and enables you to check the status of the AGS.

Info: Refer to Section 7.0 (in this manual) and to your ME-AGS-N Owner's Manual (PN: 64-0039) for detailed information on the AGS.

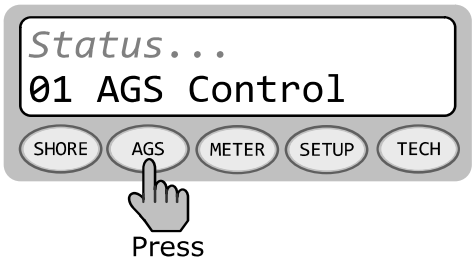

Figure 3-4, AGS Menu Display

3.3.3 METER Menu

Pressing the METER button accesses the various meters that assist in determining the status of the inverter/charger and the battery system.

Info: All displays revert back to the home screen (except for the displays under the METER button) if no button has been pressed for approximately five minutes.

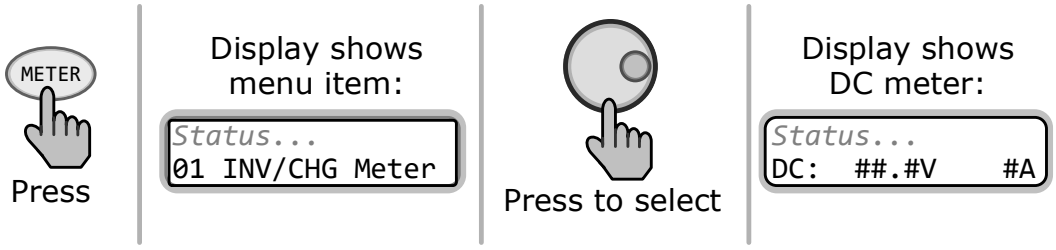

Figure 3-5, METER: 01 INV/CHG Meter Display

- **METER: 01 INV/CHG Meter** – This menu item displays the DC voltage and current while either inverting or charging.

DC: V (Volts) & A (Amps): First value displays the voltage from the batteries connected to the inverter. This reading's accuracy is ±1.5% with a 0.1 VDC resolution. Second value displays (while inverting) a negative number to show the battery current used by the inverter. If charging, the *DC: A (Amps)* reading displays a positive number to show the amount of current delivered to the batteries.

This meter converts AC amps to display DC amps, so the accuracy below one amp AC (~10 amps DC @ 12 VDC) is not detected. When the current in or out of the batteries is greater than one amp AC, the accuracy of this meter is ±20%.

VAC Out: Display provides the AC voltage measurement at the inverter's output terminals. If inverting, this meter accurately measures the pure sine wave inverter's output voltage. When in Standby mode, this measures the AC voltage that is passing through the inverter from the source (e.g., grid or generator) to the inverter's output terminals.

MS-PAE Series (240 VAC output): Even though these inverters provide a 240-volt output, this meter displays the average of the two hot outputs (i.e., HOT 1 to NEUTRAL and HOT 2 to NEUTRAL) as a nominal 120-volt value.

Note: *This meter is only accurate when the inverter is pure sine wave.*

Hz Out: While inverting, this meter displays the output frequency of the inverter. When in Standby mode, this meter displays the frequency of the incoming AC source (i.e., grid or generator) that is passing through the inverter to the inverter's output terminals. The frequency value is shown in Hertz (Hz).

Load Amps (MS-PAE, MS-PE and MSH inverter models only): This meter displays the total AC current delivered to the loads on the inverter's AC output terminals. A positive (+) *Load Amps* value indicates power is being pulled from the inverter to run an AC load—either using the batteries in Inverter mode, or from the AC input source in Standby mode.

When I look at the Loads Amps display on a remote, how is this value calculated?

For MSH Series inverters: *Load Amps* is determined by subtracting the input current value (*02C Input Amps*) from the current charging the battery (*02D Inv/Chg Amps*).

- ◇ Invert mode example: 0A (input amps) minus -10A (inverter amps) = 10A (load amps), see Figure 3-6. A load amps value of 10A means 10A x 120V = 1200W load on the inverter.
- ◇ Standby mode example: 20A (input amps) minus 10A (charger amps) = 10A (load amps), see Figure 3-7. A load amps of 10A means 10A x 120V = 1200W load on the inverter.
- ◇ Load Support mode example: 10A (input amps) minus -10A (inverter amps) = 20A (load amps), see Figure 3-8. A load amps of 20A means 20A x 120V = 2400W load on the inverter.

For MS-PAE and MS-PE Series inverters: The *Load Amps* value is shown as 120VAC current, even though there may be 240VAC loads, and is calculated differently based on the mode.

- ◇ When in Inverter mode, the *Load Amps* value is the sum of all the 120V currents from both HOT 1 and HOT 2 outputs.

  Example: If I have a 5A @ 120V load on the HOT 1 output, a 15A @ 120V load on the HOT 2 output, and a 2A @ 240V load on the HOT 1 and HOT 2 outputs; what would the *Load Amps* menu display? The display shows 24A, which is the 120V equivalent current.

  Calculated:

  ☐ AC1 to Neutral = 5A @ 120V
  ☐ AC2 to Neutral = 15A @ 120V
  ☐ AC1 to AC2 = 2A @ 240V (2A @ 120V + 2A @ 120V)

  Load Amps value = add all 120V currents (5A+15A+2A+2A=24A), then, multiply sum by 120V load (24A x 120V = 2880W).
- ◇ When in Standby mode, the *Load Amps* value is determined by subtracting the input current value (*02C Input Amps*) from the current charging the battery (02D Inv/Chg Amps).

  Example: 20A (input amps) minus 10A (charger amps) = 10A (load amps). A *Load Amps* display of 10A means 10A x 120V = 1200W load on the inverter.

Input Amps (MS-PAE, MS-PE and MSH inverter models only): This meter displays the total AC amps being used by the inverter for charging and for any load connected to the output of the inverter. This meter value is always displayed as a positive (+) number.

Example: If the charger is delivering 20A to the battery from the AC source and the load connected to the inverter output is using another 10A, the combined load on the incoming AC source is 30A. So the *Input Amps* display would show 30A.

I/C Amps (MS-PAE, MS-PE and MSH inverter models only): This menu displays the inverter or charger amps and is shown as an AC value. A negative (–) amps reading indicates the inverter is powering the inverter loads, and the batteries are discharging (inverter amps). A positive (+) amps reading indicates the inverter is using the AC input source to charge the batteries (charger amps).

AC Input (MSH inverter models only): This menu displays the RMS value of the AC voltage at the inverter's AC1 and NEUTRAL input terminals.

AC2 Input (Dual Source Inverter models only): This menu displays the RMS value of the AC voltage at the inverter's AC2 and NEUTRAL input terminals.

Info: If the *AC2 Input* menu displays voltage (~ 50v), but the generator is off or nothing is connected to the AC2 input; this is normally because the neutral-to-ground bond connection in the electrical system is not correct or not connected.

- **METER: 02 BM: SOC** thru **06 BM: TECH** – These menus allow the optional ME-BMK (Magnum Energy's Battery Monitor Kit)—if installed—to be configured to your specific system preferences, and displays the status of the battery system.

Info: Refer to Section 8.0 (in this manual) and to your ME-BMK/ BMK-NS Owner's Manual (PN: 64-0013) for detailed information on these menus and the Battery Monitor Kit.

INVERTER MODE

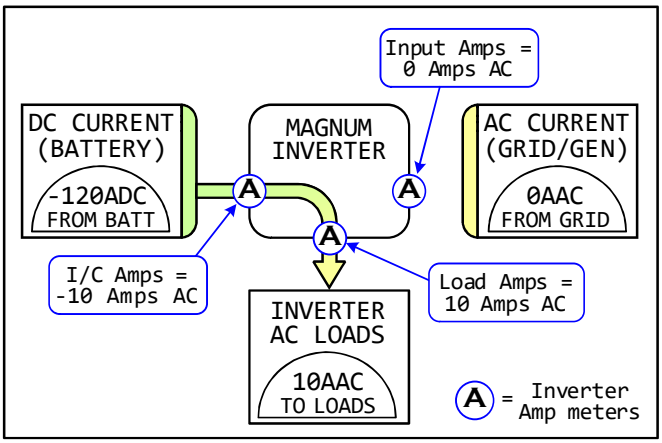

Current from the battery is used by the inverter to power the inverter's AC loads.

Example below:

- Current to inverter input (Input Amps) = 0 Amps AC
- Current from battery (I/C Amps) = -10 Amps AC
- Current to power the AC loads (Load Amps) = 10 Amps AC

[*Status/Fault*] Input Amps: 0AAC	[*Status/Fault*] I/C Amps: -10AAC	[*Status/Fault*] Load Amps: 10AAC

Figure 3-6, Current Flow – Inverter Mode

STANDBY MODE

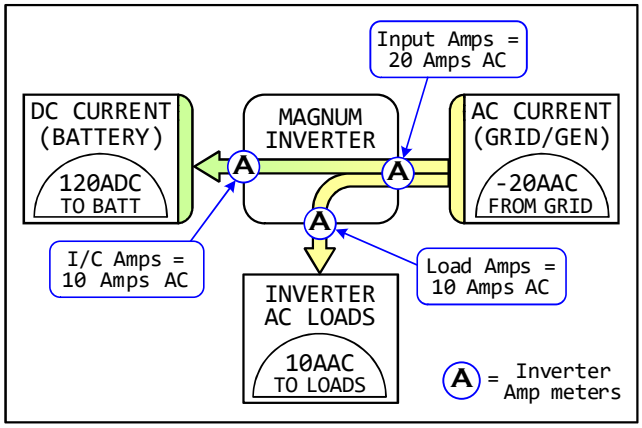

Current from the grid/generator to the inverter's AC input is used to power the inverter's AC loads and to charge the battery.

Example below:

- Current to inverter input (Input Amps) = 20 Amps AC
- Current from battery (I/C Amps) = 10 Amps AC
- Current to power the AC loads (Load Amps) = 10 Amps AC

[*Status/Fault*]	[*Status/Fault*]	[*Status/Fault*]
Input Amps:20AAC	I/C Amps: 10AAC	Load Amps: 10AAC

Figure 3-7, Current Flow – Standby Mode

LOAD SUPPORT MODE (MSH Series Only)

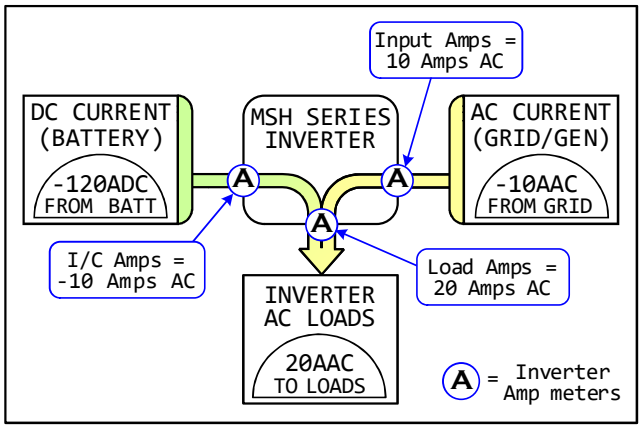

The MSH Series uses current from the battery to assist in powering the inverter's AC loads and to reduce the current from the grid/generator.

Example below:

- Current to inverter input (Input Amps) = 10 Amps AC
- Current from battery (I/C Amps) = -10 Amps AC
- Current to power the AC loads (Load Amps) = 20 Amps AC

[*Status/Fault*]	[*Status/Fault*]	[*Status/Fault*]
Input Amps:10AAC	I/C Amps: -10AAC	Load Amps: 20AAC

Figure 3-8, Current Flow – Load Support Mode

3.3.4 SETUP Menu

Pressing the SETUP menu button provides access to menu items and settings that allow the inverter/charger to be configured. Review each menu item to determine if any setting requires adjustment to meet your requirements.

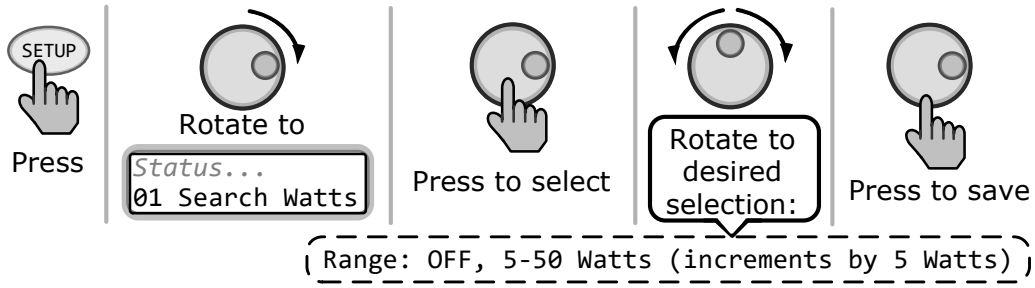

Figure 3-9, SETUP: 01 Search Watts Selections

- **SETUP: 01 Search Watts** – Allows you to turn off the Search Watts feature, or to adjust the power level to determine when the inverter leaves Search mode. If not needed, select *OFF*. When search is turned off, the inverter continuously provides full AC voltage to the loads.

Default setting: *Search = 5W*
Range: *OFF, 5-50 Watts (5 Watt increments)*

Info: When the Search Watts feature is active, "*Searching*" appears on the top line of the LCD display and the green INV LED will flash.

What is the Search Watts feature? This feature helps save battery power by reducing the inverter's output to search pulses when there is no detectable load. If a load greater than the wattage level setting turns on while the inverter is searching, the inverter starts inverting to provide full voltage on its output.

Should I use the Search Watts feature? If the inverter can spend a great deal of time searching (to reduce the power drain on your batteries) and you can tolerate small loads (<5 watts) being off, then the Search mode feature should be used. However, if some small loads (i.e., digital clocks, satellite receivers, answering machines, etc.,) are required to be on, then this feature should be turned off (*Search = OFF*).

Where should I set Search Watts? This setting should be adjusted to the same power level (or the next lower setting) of the smallest load that you plan to run. If you don't know the wattage of the smallest load, turn the load on and decrease the *Search Watts* setting until the load comes on and stays on.

Info: Even though the Search feature is on, some connected equipment—even if they are off—may draw enough current to keep the inverter in the Inverting mode (i.e., not "Searching").

- **SETUP: 02 LowBattCutOut** – This setting sets the battery voltage level that turns the inverter off to protect the batteries from over-discharge damage. If the battery voltage drops below the LBCO selected set-point continuously for more than one minute, the FAULT LED comes on, the inverter turns off, and the display shows a *Low Battery* status. If the battery voltage falls below 8.5 volts (12-volt models), 17.0 (24-volt models) or 34.0 volts (48-volt models), the FAULT LED and *Low Battery* status display will be immediate.

Default settings: *LBCO = 10.0 VDC (12v models), 20.0 VDC (24v models), or 40.0 VDC (48v models)*

Range: *9.0-13.0 VDC (12v inverter)*, *18.0-25.5 VDC (24v inverter)*, or *36.0-51.0 VDC (48v inverter)*

Info: If the inverter shuts down from a LBCO fault, this fault will automatically be cleared when the battery voltage increases to the LBCI (Low Battery Cut In) level. The inverter's LBCI level is determined by the LBCO setting. If the LBCO is >12.2V*, the unit recovers when Vbat ≥ LBCO +0.4 V.; if the LBCO is ≤ 12.2V*, the unit recovers when Vbat ≥12.5V*.

* These are 12V values; they are different for 24V and 48V inverters.

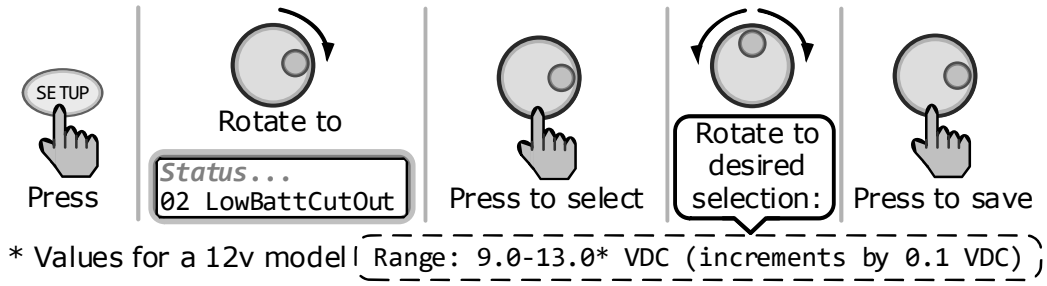

Figure 3-10, SETUP: 02 LowBattCutOut Selections (12v)

Where to set the LBCO setting? For Lead Acid battery types (e.g., Flooded, GEL, and AGM); if you want to cycle the batteries slightly—but don't want to discharge them more than 20%*—then the LBCO setting should be from 11.5-12.2 VDC (12-volt models), 23.0-24.4 VDC (24-volt models), or 46.0-48.8 (48-volt models). In some applications, such as an off-grid home or when doing a lot of dry-camping in your RV, you may want to cycle down to 50%* by setting the LBCO from 10.0-11.4 VDC (12-volt models), 20.0-22.8 VDC (24-volt models), or 40.0-45.6 VDC (48-volt models). In extreme circumstances, you have the ability to discharge the batteries to 80%* by setting the LBCO to 9.0-9.5 VDC (12-volt models), 18.0-19.0 VDC (24-volt models), or 36.0-38.0 VDC (48-volt models) before recharging.

* *These voltage levels are rough estimates. For accurate battery monitoring, a battery monitor such as the ME-BMK or ME-BMK-NS is required.*

Info: The higher the LBCO setting, the less the inverter discharges the batteries; which allows the batteries to have a longer life. The down side to a higher LBCO setting is the need to charge more often to prevent the inverter from shutting off from an LBCO Fault.

Info: If there is an AGS-N installed, it should be set to start ≥1.0 volts higher than the LBCO setting—this is to prevent the inverter from shutting down before the generator comes on.

- **SETUP: 03 Absorb Time** – Used to determine when the charger completes the Absorption stage and transitions to the Float stage. Absorption is the second stage of the battery charging process and the batteries will be almost fully charged. Refer to Table 3-2 to correlate the battery capacity to the absorption time.

Default setting: *Absorb Hrs = 1.5*

Range: *0.1-25.5 Hrs*

Note: *If "CV/CC Controlled" displays on this menu's screen, you will not be able to adjust the settings because "CC/CV" has been selected as the battery type from the 04 Battery Type menu.*

Info: If the Absorption stage is short or terminated, the batteries may not receive a full charge. In contrast, if the Absorption stage is too long the batteries may be overcharged. Either scenario may cause damage to the batteries. Contact the battery manufacturer for the best charge settings for your type of batteries.

Info: The range of the *Absorb Time* setting is dependent on the inverter's compatibility level. With a compatibility level of ≥4.0, the available range is 0.1-25.5 hrs. However, if the compatibility level is <4.0, even though you can adjust the setting from 0.1-25.5 hours, this range may not be recognized by the inverter, and could cause the charger to revert to the default setting of 2.0 hours. See Table 3-1 for the remote setting and inverter compatibility level required.

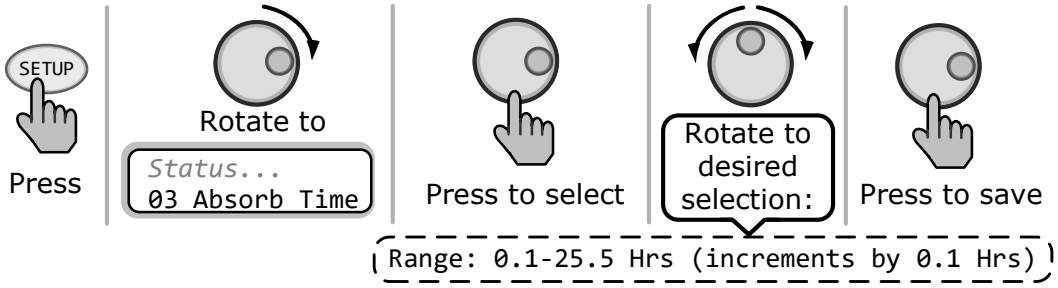

Figure 3-11, SETUP: 03 Absorb Time Selections

Where do I set the Absorb Time setting? Select the setting based on the 20-hour amp-hour (AH) capacity of your battery bank.

Table 3-2, Battery AmpHrs Capacity to Suggested Absorb Time

Battery AmpHrs Capacity	Suggested Absorb Time	Battery AmpHrs Capacity	Suggested Absorb Time
200-300	60 minutes	1310-1500	240 minutes
310-500	90 minutes	1510-1700	270 minutes
510-700	120 minutes	1710-1900	300 minutes
710-900	150 minutes	1910-2100	330 minutes
910-1100	180 minutes	2110-2300	360 minutes
1110-1300	210 minutes	2310-2500	390 minutes

How do I determine my Battery Amp-Hour capacity? The inverter requires deep cycle batteries, which are specifically made for continuous use. The batteries are rated either by AHrs or reserve capacity in minutes.

- Amp-hour (AH) capacity is a measurement of how many amps a battery can deliver for a specified length of time (usually 20 hours) until the voltage achieves 1.75 VDC/cell at 80° F.
- Reserve Capacity (RC) is a measure of how many minutes a battery can deliver a certain amount of current (usually 25A) and maintain a voltage above 1.75 VDC/cell at 80° F.

Info: If using the Reserve Capacity (25A), the 20-hour AH capacity can be estimated by multiplying 'minutes reserve capacity' by 50%.

Table 3-3 provides an estimated 20-hour amp-hour capacity based on the group/code size, physical size, and voltage of the battery. If you are not sure of your battery's 20-hour AH rating, consult your battery manufacturer/ dealer or use the table below to obtain an estimate.

Table 3-3, Battery Size to Battery AmpHrs (estimated)

Group/Code Size	Physical Size (L" x W" x H")	Battery Voltage	Battery AHrs (20-hr rate)
GC-2 (Golf cart)	10 3/8 x 7 13/16 x 10 5/8	6V	220 AHrs
L-16	11 11/16 x 7 x 16 11/16	6V	375 AHRs
Group 22	9 1/2 x 6 7/8 x 8 5/16	12V	55 AHRs
Group 24	10 1/4 x 6 13/16 x 8 7/8	12V	70 AHRs
Group 27	12 1/16 x 6 13/16 x 8 7/8	12V	95 AHRs
Group 31	13 x 6 13/16 x 9 7/16	12V	110 AHRs
4D	20 3/4 x 8 3/4 x 9 7/8	12V	200 AHRs
8D	20 3/4 x 11 1/8 x 9 7/8	12V	250 AHRs

Once you've determined the amp-hour capacity of each battery, review how your batteries are connected (parallel or series) to determine the total amp-hour capacity of the battery bank:

Parallel connection – batteries connected in parallel (positive to positive, negative to negative) increase the AHr capacity of the battery bank, but the voltage remains the same.

Series connection – batteries connected in series (positive to negative) increase the voltage of the battery bank, but the AHr rate remains the same.

In battery banks where you have batteries connected in series and in parallel, the rules are the same. The batteries connected in series are referred to as a 'series string' and the amp-hour capacity doesn't change. Each series string is connected together in parallel to increase the amp-hour capacity. Add the amp-hour capacity of each series string connected in parallel to determine the total amp-hour capacity of the battery bank.

● **SETUP: 04 Battery Type** – This setting selects the battery type, which determines the battery charge profile and ensures the batteries are receiving the proper charge voltage. The settings for the battery voltage charge levels are fixed when using the *GEL*, *Flooded*, *AGM1*, *AGM2, or LFP* selections; or adjustable if using the *CC/CV* or *Custom* selections.
Default setting: *Battery Type = Flooded*
Range: *GEL, AGM1, AGM2, Flooded, CC/CV, Custom, LFP,*

◇ **Battery Type (GEL, Flooded, AGM1, or AGM2)** – When the battery type selection is *GEL* (for Gel batteries), *Flooded* (for liquid lead acid batteries), *AGM1* (for Lifeline AGM batteries), or *AGM2* (for East Penn/Deka/Discover/ Trojan AGM batteries), the charge voltage level for the Absorption, Float, and EQ charge modes are fixed and shown in Table 3-4—depending on the battery type selected and the nominal inverter battery voltage.

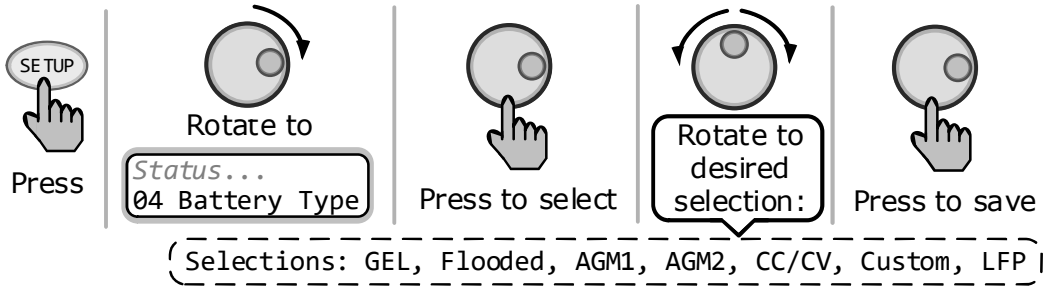

Figure 3-12, SETUP: 04 Battery Type Selections

◇ **Battery Type (CC/CV) –** The *CC/CV* selection provides a Constant Current/Constant Voltage (CC/CV) charging method with an adjustable charge voltage and a setting that limits output current—if needed. It consolidates all the battery charge settings that are required for a 2-stage charging cycle (i.e., Constant Current and Constant Voltage).

Info: If *04 Battery Type* is set to *CC/CV*, the *03 Absorb Time*, *05 Charge Rate*, and *09 Final Charge* menus are no longer accessible and display "CV/CC Controlled" when selected. This prevents access to settings that may cause a charging conflict while in the CC/CV profile.

Info: When the CC/CV battery type has been selected, remove the BTS from the inverter to prevent the BTS from changing the charge voltage level based on temperature.

Info: The CC/CV battery type selection forces the charger to go into the Constant Current charge mode each time AC is connected. If AC is reconnected less than two minutes after being disconnected, the charger will return to the previous charge mode.

■ **Max Amps** – Sets the maximum charge amperage allowed to charge the batteries during the CC/CV charge cycles. The range of settings are provided to limit the charge current to the battery bank, which helps prevent battery overheating caused by charging at too high a charge rate.
Default: *200 ADC*
Range: *20 - 990 ADC*

Info: If the Battery Monitor Kit is connected, the DC amps value determined by the BMK (under *METER: 03 BM: Meters/DC Amps*) will be used by the CC/CV's *Max Amps* setting instead of the inverter's DC calculated current (shown under *METER: 01A INV/ CHG Meter/ DC:*)—as it is more accurate (+/- .1 ADC).

■ **Chg Volts** – Sets the voltage level at which the charger will hold the batteries during the Constant Voltage cycle.
Default: *13.8 VDC (12v), 27.6 VDC (24v), 55.2 VDC (48v)*
Range: *OFF, 12.0-16.0 V (12v), 24.0-32.0 V (24v), 48.0-64.0 V (48v)*

■ **EndChg** – These selections determine when the second stage of charging (Constant Voltage) is finished. If using the *DoneTime* or *DoneAmps* selections, once the constant voltage charge cycle is finished, it transitions to a Silent charge stage. After entering the Silent Charge mode, the charger automatically stops charging, but is still actively monitoring the battery voltage. The charger will remain "Silent" until the battery voltage drops to the *Recharge* setting, at which time the charger will start another Constant Current/Constant Voltage charge cycle (see Figure 3-13).
Default: *Time*
Range: *Time, DC Amps, Hold VDC*

* **DoneTime** – The *DoneTime* selection is used when a specific time is selected to be the best solution for determining when the batteries are fully charged and the Constant Voltage stage needs to end. This setting determines how long the charger will hold the battery voltage at the *Chg Volts* setting—based on a set time period. When using time, the battery bank size will typically determine the length of the *DoneTime* setting. The larger the battery bank, the longer the time needed to ensure a full charge to the batteries. If the setting is from *0.1 to 25.5 hrs*, the charger transitions to the Silent Charge mode after the battery voltage has been at the charge voltage setting for the selected time. Refer to Table 3-2 to assist you in selecting the *DoneTime* setting based on the AHr capacity of your battery bank.
Default: *1.5 Hrs*
Range: *0.1-25.5 Hrs*

* **DoneAmps** – The *DoneAmps* setting is used when the DC amperage supplied to the batteries (i.e., return amps) determines when the batteries are fully charged and the Constant Voltage stage needs to end. This setting determines how long the charger holds the battery voltage at the *Chg Volts* setting—based on a minimum current setting (i.e., return amps). During the Constant Voltage charge mode, as the battery charges, the current from the charger slowly decreases. When this current decreases below the *DoneAmps* setting, the charger transitions to the Silent charge stage. Most battery manufacturers use a specific formula to determine return amps (indicating a full charge for their particular type of battery). The formula used by most manufacturers to absorb the batteries is C/20, where C=Battery Bank's Total Amp Hours. Basically, they take approximately 5% of the total battery bank size, and consider the battery totally charged when the charger's return amps drops to this level. Continuing to charge past this level may possibly overcharge the batteries. Check with your battery manufacturer to find out what the correct return amp settings are for your batteries.
Default: *20 ADC*
Range: *0-250 ADC*

Info: Setting the *DoneAmps* value to zero keeps the charger in the Constant Voltage charge mode until the *MaxTime* setting (under *SETUP: 04 Battery Type/CC/CV*) is reached.

Info: It is highly suggested that you install a battery monitor if the *DoneAmps* setting is used. If no battery monitor is installed, the *DoneAmps* setting relies on the METER menu's *01 INV/CHG Meter DC:* value to determine when to transfer out of the Constant Voltage charge mode. When a ME-BMK/ME-BMK-NS is installed, the *DoneAmps* setting relies on the METER menu's *03 BM: Meters DC Amps:* value to determine when to transfer out of the Constant Voltage charge mode. This is the most accurate DC amperage measurement (reading from the battery monitor is accurate to +/- .1 ADC).

Info: When using the *DoneAmps* setting, the charger will stay in the Constant Voltage charge mode for a minimum of two minutes—independent of the actual *DoneAmps* setting.

Info: If DC loads are connected directly to the batteries, it is not recommended that you use the *DoneAmps* setting. DC loads cause the charger to increase the amperage delivered to the battery bank in order to charge the batteries and to run the DC loads. This scenario could result in overcharging the batteries since the return amps reading will be skewed by the DC loads.

□ **MaxTime** – This setting is a safety feature that ensures abnormal conditions do not cause the charger to hold batteries at a high voltage for a prolonged period of time. This menu sets a maximum time the charger is allowed to operate in either the Constant Current or Constant Voltage charge modes. If the charger reaches the *MaxTime* setting, it will transition to the Silent charge stage.

Default: *12.0 Hrs*

Range: *OFF, 0.1-25.5 Hrs*

□ **Recharge** – This setting determines the DC voltage set-point to which the batteries are allowed to fall—while the charger is in the Silent charge cycle—before the charger restarts and recharges to the *Chg Volts* setting. This setting should be at the lowest DC volts level that you want the batteries to fall before starting a new charge.

Default: *12.0 VDC (12v), 24.0 VDC (24v), 48.0 VDC (48v)*

Range: *12.0-16.0 VDC (12v), 24.0-32.0 VDC (24v), 48.0-64.0 VDC (48v).*

***** **Hold VDC** – This setting holds the battery voltage at the *Chg Volts* setting. This is for a system that requires a constant charge voltage to be present at all times (see Figure 3-14).

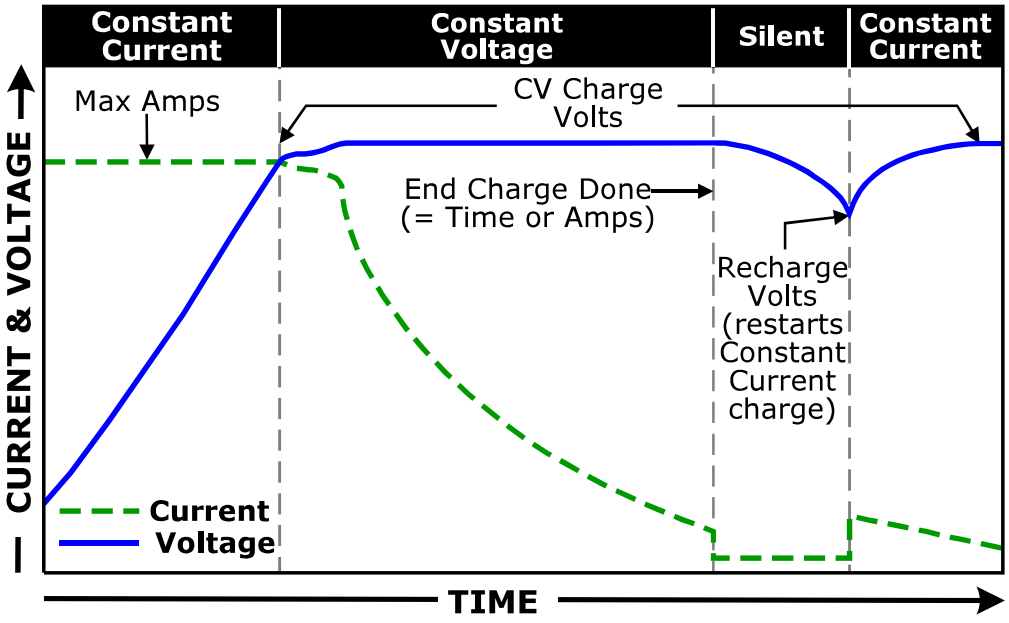

Figure 3-13, Done Time/Amps Charge Stages

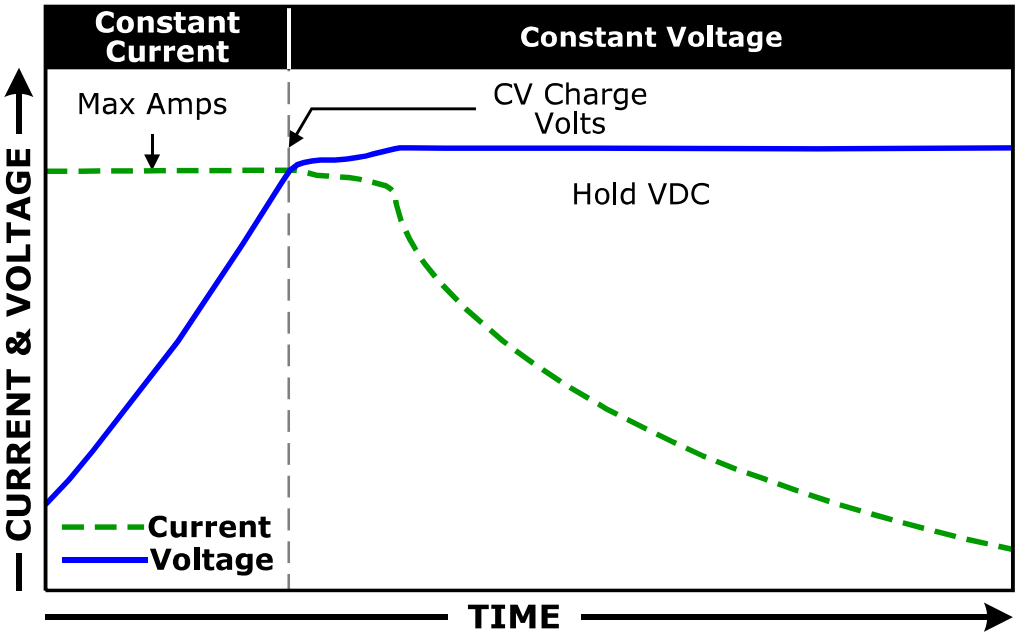

Figure 3-14, Hold VDC Charge Stages

◇ **Battery Type (Custom) –** This selection allows you to individually adjust the float, absorb, and equalization charge voltage settings and to set an equalization time for your batteries. The following Custom battery settings display only if *Custom* has been selected from the *04 Battery Type* menu. Use these settings to determine the battery's absorption, float, and equalization voltages, and the maximum amount of time spent equalizing.

- **Absorb** – Sets the level at which the charging voltage is held constant during an Absorption cycle.
  Default: *14.4V (12v), 28.8V (24v), 57.6V (48v)*
  Range: *12.0-16.0V (12v), 24.0-32.0V (24v), 48.0-64.0V (48v)*
- **Float** – Sets the level at which the charging voltage is held constant during a Float cycle.
  Default: *13.2V (12v), 26.4V (24v), 52.8V (48v)*
  Range: *12.0-16.0V (12v), 24.0-32.0V (24v), 48.0-64.0V (48v)*
- **Equalize** – Sets the level at which the charging voltage is held constant during an Equalization cycle.
  Note: *Equalize volts cannot be set lower than the Absorb setting, or more than 2 volts (12v systems), 4 volts (24v systems), or 8 volts (48v systems) above the Absorb setting.*
  Default: 15.6V (12v), *31.2V (24v), 62.4V (48v)*
  Range: *12.0-16.0V (12v), 24.0-34.0V, 48.0-68.0V (48v)*

◇ **Battery Type (LFP)** – The LFP selection is provided to work specifically with lithium iron phosphate battery types and sets the charge voltage levels as shown in Table 3-4—depending on the nominal inverter battery voltage.

When the *LFP* battery type has been selected, the charger begins Bulk charging whenever AC power is connected, and remains in the bulk charge stage until the absorption charge voltage is achieved. The charger will remain in the absorption charge stage until it is done, which is based on the Absorb Done: Time, Amps or SOC setting. After the absorption charge is done, the charger switches to the float charge mode, which allows the charge voltage to fall to the float voltage level. While float charging, the charger will provide the maximum rated current to the batteries in order to keep them fully charged and ready if needed by the inverter. The charger will remain in Float as long as the AC source is available on the input of the charger and the battery voltage is above the LFP rebulk level. If the voltage drops below the LFP rebulk level (>10 seconds), the charger restarts the Bulk and Absorption charge stages.

CAUTION: If the LFP battery type has been selected, remove the BTS. Otherwise, the charge voltage level will change based on temperature changes around the BTS.

Info: When using the LFP battery type profile, the rebulk level ≤12.8V (12-volt systems), ≤25.6V (24-volt systems), or ≤51.2V (48-volt systems) must be met for 10 seconds to rebulk.

Info: If the LFP battery type is selected, the *09 Final Charge* menu is no longer accessible and displays "*LFP Controlled*". This prevents access to other settings that may cause a charging conflict.

Info: The LFP battery type selection forces the charger to go into the Bulk charge mode each time AC is connected. If AC is reconnected less than two minutes after being disconnected, the charger will return to the previous charge mode.

Table 3-4, Battery Type to Charge Voltages

	Battery Type	Inverter Voltage	Absorption Voltage	Float Voltage	Equalization Voltage
Fixed Voltage	GEL	12 VDC	14.1 VDC	13.6 VDC	14.1 VDC[1]
		24 VDC	28.2 VDC	27.2 VDC	28.2 VDC[1]
		48 VDC	56.4 VDC	54.4 VDC	56.4 VDC[1]
	Flooded	12 VDC	14.6 VDC	13.4 VDC	15.5 VDC
		24 VDC	29.2 VDC	26.8 VDC	31.0 VDC
		48 VDC	58.4 VDC	53.6 VDC	62.0 VDC
	AGM1[2]	12 VDC	14.3 VDC	13.3 VDC[5]	15.5 VDC
		24 VDC	28.6 VDC	26.6 VDC[5]	31.0 VDC
		48 VDC	57.2 VDC	53.2 VDC[5]	62.0 VDC
	AGM2[3]	12 VDC	14.5 VDC	13.5 VDC	14.5 VDC[1]
		24 VDC	29.0 VDC	27.0 VDC	29.0 VDC[1]
		48 VDC	58.0 VDC	54.0 VDC	58.0 VDC[1]
	LFP	12 VDC	14.4 VDC	13.6 VDC	14.4 VDC[1]
		24 VDC	28.8 VDC	27.2 VDC	28.8 VDC[1]
		48 VDC	57.6 VDC	54.4 VDC	57.6 VDC[1]
Adjustable Voltage	Custom[4]	12 VDC	12.0-16.0 VDC	12.0-16.0 VDC	12.0-16.0 VDC
		24 VDC	24.0-32.0 VDC	24.0-32.0 VDC	24.0-32.0 VDC
		48 VDC	48.0-64.0 VDC	48.0-64.0 VDC	48.0-64.0 VDC
	CC/CV	12 VDC	12.0-16.0 VDC	12.0-16.0 VDC	12.0-16.0 VDC
		24 VDC	24.0-32.0 VDC	24.0-32.0 VDC	24.0-32.0 VDC
		48 VDC	48.0-64.0 VDC	48.0-64.0 VDC	48.0-64.0 VDC

Note[1]: *Voltage same as absorption voltage—to prevent equalization charge.*
Note[2]: *Charge voltages for Concord (Lifeline Series) AGM batteries.*
Note[3]: *Charge voltages for East Penn, Deka, Discover and Trojan AGM batteries.*
Note[4]: *When using Custom setting, the EQ (Equalization) voltage adjustment cannot be set lower than the Absorb Voltage setting. Also, the EQ Voltage adjustment cannot be set higher than 2 volts (12-volt systems), 4 volts (24-volt systems), or 8 volts (48-volt systems) above the Absorb Voltage setting.*
Note[5]: *For inverter models <Level 5, the Float Voltage level is 13.1 VDC (12-volt models); 26.2 VDC (24-volt models); or 52.4 VDC (48-volt models). See Section 3.2 for inverter level information.*

CAUTION: If using Lithium batteries and selecting the LFP battery type profile—to prevent the charger's output voltage level from changing based on temperature—REMOVE the BTS from the inverter.

Info: The charge voltage levels shown in Table 3-4 are with the Battery Temperature Sensor (BTS) at a temperature of 77° F (25° C), or not connected. If the BTS is connected, the actual charge voltage level will increase if the temperature around the BTS is below 77° F (25° C), and decrease if higher than 77° F (25° C). This ensures the batteries receive the correct charge voltage regardless of temperature.

- **SETUP: 05 Charge Rate** – Sets the maximum charge rate allowed to charge the batteries during Bulk, Absorption, Float, and Equalize charging. The *Max Charge = 0%* setting helps minimize charging while continuing to allow pass-thru power. The rest of the selections are provided to limit the charge rate to the battery bank, which helps prevent battery overheating caused by charging at too high a charge rate.

The *Max Charge* selections are provided as a percentage of the inverter/charger's maximum charging capability. Refer to the label on the side of the inverter (or owner's manual) to determine the inverter's maximum charge rate. Once you find this maximum charge rate, determine the percentage needed to limit the charge rate to your battery bank.

Example: The maximum charge rate of your inverter/charger is 120 amps and you need to limit the charge rate to 72 amps. Choose the *Max Charge = 60%* setting (72 amps = 60% of 120 amps).

Default setting: *Max Charge = 80%*

Range: *0-100%*

Info: *If "CV/CC Controlled" displays on this menu's screen, you will not be able to adjust the settings because "CC/CV" has been selected as the battery type from the 04 Battery Type menu.* This prevents access to settings that may cause a charging conflict while in the CC/CV profile.

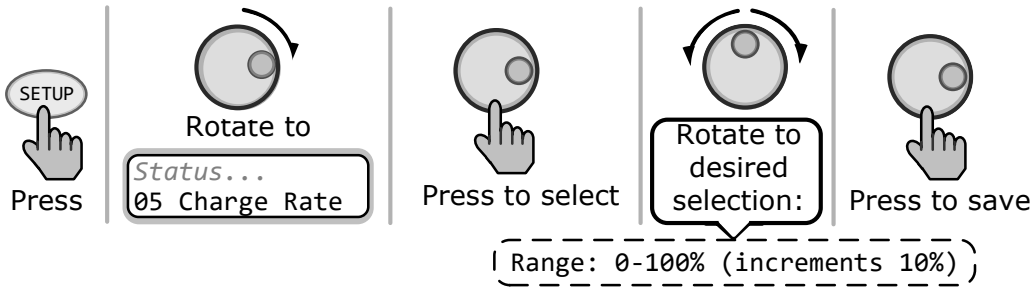

Figure 3-15, SETUP: 05 Charge Rate Selections

Where should I set my Maximum Charge Rate? The maximum charge rate is generally set to a C/5* rate (C = the total amp-hour capacity of the battery bank—using the 20-hour AH rate). The C/5 rate is usually used when the objective is to charge the batteries as quickly as possible (i.e., 400 AH ÷ 5 = 80 amp maximum charge rate). A lower rate such as C/20* is used when the batteries need to be charged as slow as possible.

CAUTION: The C/5 or C/20 charge rate settings are guidelines; they are not requirements on how to set the charge rate. For specific charge rate requirements, refer to your battery's manufacturer.

Info: If multiple inverter/chargers are used on a single battery bank, you must ensure that the total charge rate from all inverter/chargers is limited to the maximum charge rate needed for your battery bank. The maximum *Charge Rate* setting only limits the charging on each inverter/charger individually, not on all inverter/chargers.

** C/5 or C/20 rate – charge rates are commonly expressed as a ratio of the total amp-hour (AH) capacity of the battery bank. For example, with a 400 AH battery bank (C = 400), the C/5 charge rate is 80 A (400/5 = 80 A).*

- **SETUP: 06 VAC Dropout** – **03B VAC Dropout** – Selects the minimum AC voltage that must be present on the input before the inverter connects to the AC input and switches from Inverter mode to Standby mode. This setting also determines the lowest AC voltage that is allowed before the charger disengages and the inverter (if enabled) resumes powering the AC loads from the inverter's battery power—to protect AC loads during utility outages.

Setting for all models except dual-source inverters:

◇ **Set VAC Dropout** (AC1 only) – Sets at what AC voltage—from the HOT IN 1 to NEUT IN 1 terminals—will connect to or disengage from the incoming AC.
Default setting: *80 VAC (150 VAC for export models)*
Range: *60-100 VAC, UPS Mode*

Setting for dual-source inverters (i.e., MSH4024RE):

Info: Some Magnum inverters have two AC source inputs (AC1/GRID and AC2/GEN), with *VAC Dropout* settings for each input. The *Set VAC Dropout* menu only displays both the *VAC Dropout* and *VAC Dropout2* settings if connected to a dual-source model.

◇ **Set VAC Dropout** (AC1 and AC2 inputs) – The *VAC Dropout* setting determines at what AC voltage—from the AC1 to NEUT terminals—will connect to or disengage from the incoming AC. The *VAC Dropout2* setting determines at what AC voltage—from the AC2 to NEUT terminals—will connect to or disengage from the incoming AC.
Default setting: *VAC Dropout=80 VAC*, *VAC Dropout2=80 VAC*
Range: *60-100 VAC, UPS Mode*

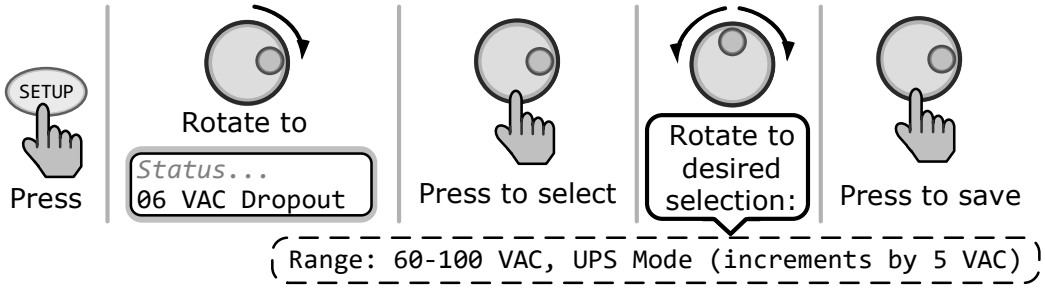

Figure 3-16, SETUP: 06 VAC Dropout Selections

Where do I set my VAC Dropout? It depends on the application and what you are using as the AC source. The settings not only look at the incoming voltage level to determine when to transfer, but also determine how quickly the charger disconnects and starts inverting.

Use a VAC dropout setting from 60 VAC to 100 VAC (export models—dropout from 110 VAC to 190 VAC) when the AC source may have fluctuations in RMS voltage. These settings attempt to prevent the charger from disengaging unnecessarily due to poor quality voltage, and are highly recommended if using a generator for charging. The transfer time from Standby mode to Inverter mode is >16 milliseconds when using these settings.

Use the *UPS Mode* setting when the AC source is well regulated above 105 VAC (200 VAC for export inverter models) and the inverter loads are sensitive to voltage fluctuations. This setting is intolerant of voltage fluctuations, so the *UPS Mode* setting is not recommended when using a generator as your AC source. The transfer time from Charge mode to Inverter mode is ≤16 milliseconds when using this setting.

- **SETUP: 07 Power Save** – This setting allows you to turn off the Power Save feature, or to select a time (from *1 minute* to *60 minutes*) that determines how often the display goes into Power Save mode.

Default setting: *PwrSave = 15min*
Range: *OFF, 1-60 Minutes*

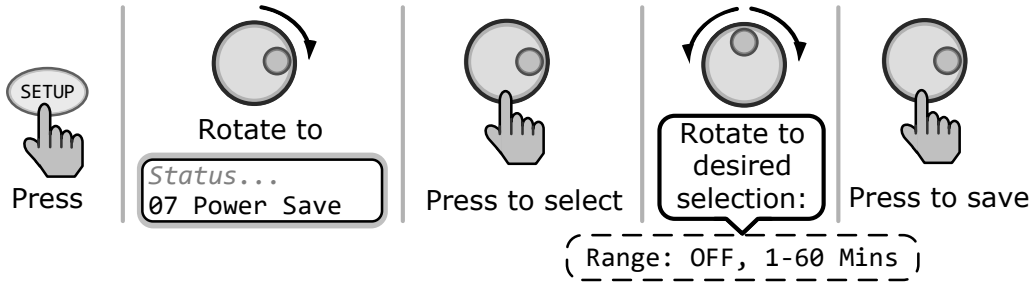

Figure 3-17, SETUP: 07 Power Save Selections

What is the Power Save feature? The Power Save feature causes the LCD backlight and LEDs on the remote display to turn off to conserve energy. The remote goes into Power Save mode if there hasn't been a button press or fault message for a set period of time. Whenever the remote goes into Power Save mode, the LCD backlight and LEDs can be reactivated by pressing any menu button. During Power Save mode, the LCD backlight and Fault LED will come on and stay on as long as a fault is detected.

If you want the LCD backlight and LEDs to always be on, you will need to turn the Power Save feature off by selecting *PwrSave = OFF*.

- **SETUP: 08 Screen Setup** – Used to adjust the contrast of the LCD screen and the backlight brightness for the best looking display based on the current lighting conditions and viewing angle.

Default settings: *Contrast = 100%*; *Brightness = 50%*
Range: *Contrast: 0-100%, Brightness: 0-100%*

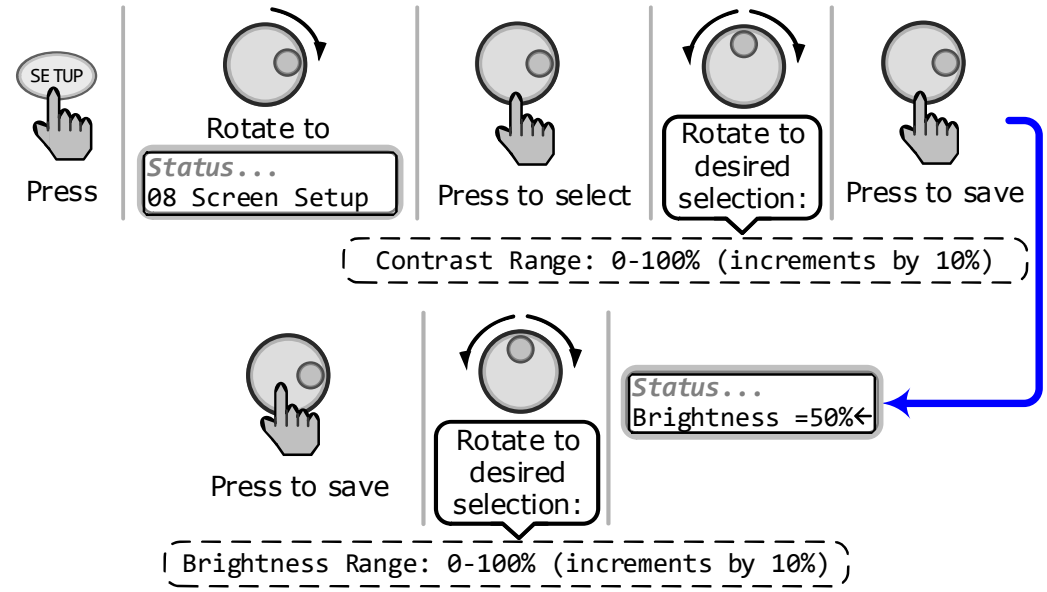

Figure 3-18, SETUP: 08 Screen Setup Selections

- **SETUP: 09 Final Charge** – The *Final Charge* stage setting is the stage to which the charger will transition after the absorption stage has finished—as set in the *03 Absorb Time* menu.

Default setting: *Final = Multi*

Selections: *Multi, Float, Silent (Rebulk)*

Note: *If "CC/CV Controlled" (or "LFP Controlled") displays on this menu's screen, you will not be able to adjust the settings because either "CC/CV" (or "LFP") has been selected as the battery type from the 04 Battery Type menu.* This lock-out screen prevents access to settings that may cause a charging conflict while in the CC/CV (or LFP) battery charge profile.

◇ **Set Final Charge = Multi** – The *Multi* setting (which is short for "Multi-Stage"), transitions from the Absorption stage to Float. After being in the Float stage for 4 hours with no DC load on the batteries, the charger enters the Full Charge stage (i.e., Battery Saver mode). In Full Charge mode, the charger automatically stops charging but is still on and actively monitoring the battery voltage. The charger remains in the Full Charge stage until the battery voltage drops below 12.7 VDC (for 12-volt batteries), 25.4 VDC (for 24-volt batteries), or 50.8 VDC (for 48-volt batteries)—at which time it returns to the Float stage. The charger continues to cycle between Float and Full Charge as long as incoming AC is available. See Figure 3-19.

Why would I use Multi-Stage? Multi is the most commonly used charge mode. It is suitable for most applications and will assure a full charge to the batteries, without overcharging. If there is another alternate charge source charging the batteries, such as PV, wind or hydro, then Multi mode will use the inverter/charger to complete a full charge. When the charger transitions to Full Charge, the alternate charge source will then maintain the battery voltage. If the alternate source is unable to maintain the voltage, the charger will enter Float mode for another four hour period. The Full Charge feature helps reduce water consumption in flooded batteries when they are left in the charge mode for extended periods, like in a backup power application.

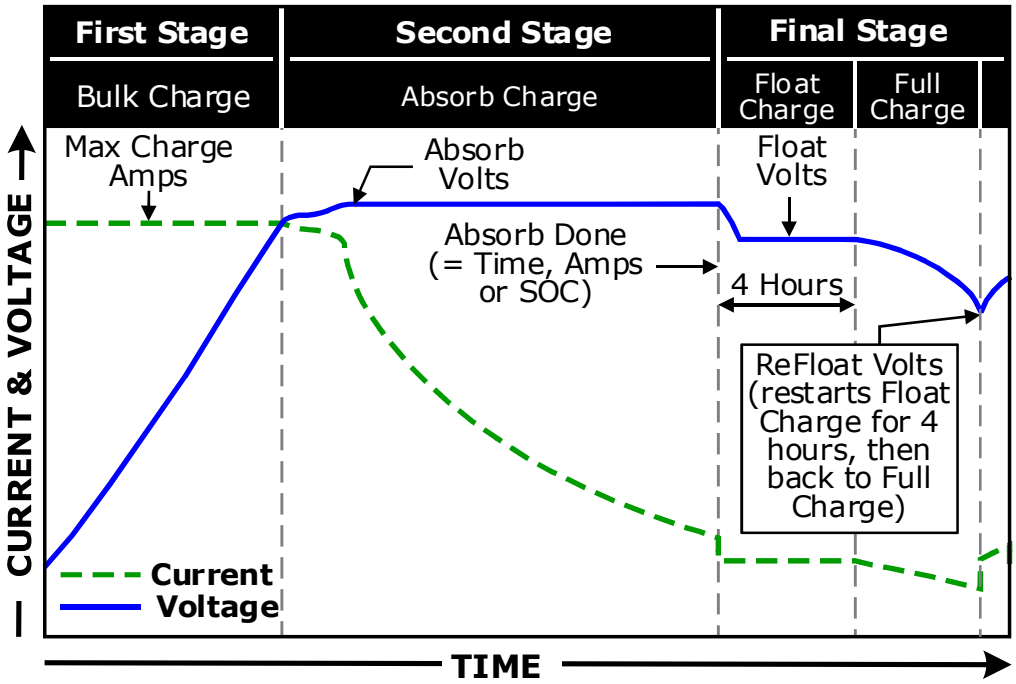

Figure 3-19, Final Charge Stage - Multi-Stage

◇ **Set Final Charge Stage = Float** – The Float stage is a maintenance charge mode that maintains a constant voltage—while delivering up to the maximum rated current of the charger in order to power any DC loads connected to the batteries. Most 3-stage chargers finish the charge mode in Float and remain in Float as long as an AC source is available on the input of the charger. The float voltage is determined by the battery type selected in the *04 Battery Type* menu. Unlike Multi mode, in Float mode there is no Full Charge feature. See Figure 3-20.

Why would I use the Float Charge Stage? Float mode is typically used when the charger is the only charge source connected to the batteries. This mode will maintain the batteries at the float voltage. If using flooded batteries and the charger is in float for an extended period, the water level should be checked every two to three weeks for proper levels.

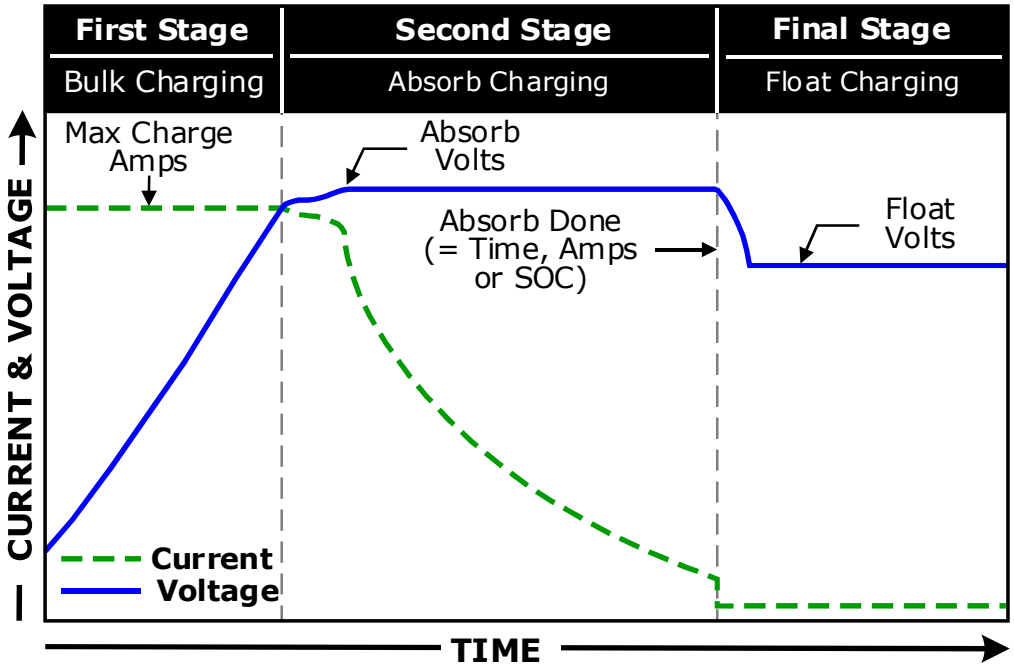

Figure 3-20, Final Charge Stage - Float Stage

◇ **Set Final Charge Stage = Silent** – Silent mode stops charging once it transitions from Absorb mode to '*Silent*'. Once the charger enters Silent mode the battery voltage is continuously monitored. If the batteries fall to the *Rebulk* value, the charger restarts the Bulk Charge mode and then transitions to Absorb Charge mode. After the Absorb Charge mode, the charger again transitions to Silent mode. This silent to rebulk to absorb and back to silent cycle will continue as long as it is required. See Figure 3-21.

- **ReBulk** – When *Silent* is selected, you must also set the DC voltage set-point where the charger restarts the Bulk Charge mode. This setting should be at the lowest DC volts you want the batteries to fall before starting a new bulk charge. Typically, the lowest DC volts the batteries are allowed to fall is 12.0 to 12.2 VDC (12-volt systems), 24.0 to 24.4 VDC (24-volt systems), and 48.0 to 48.8 VDC (48-volt systems) respectively.

  Default setting: *Rebulk = 12.0V (for 12v inverter)*

  Ranges: *12.0-16.0 VDC (12v), 24.0-32.0 VDC (24v), 48.0-64.0 VDC (48v)*

Why would I use the Silent Stage? Silent mode is typically used when an alternate charge source is available and able to fully charge or finish the charge cycle after the Absorb stage. A major difference between Multi mode and Silent mode is that the Silent mode returns to Bulk mode instead of Float mode. In Silent mode you can also adjust the Rebulk set-point in order to allow the alternate charge source to provide more of the battery charging.

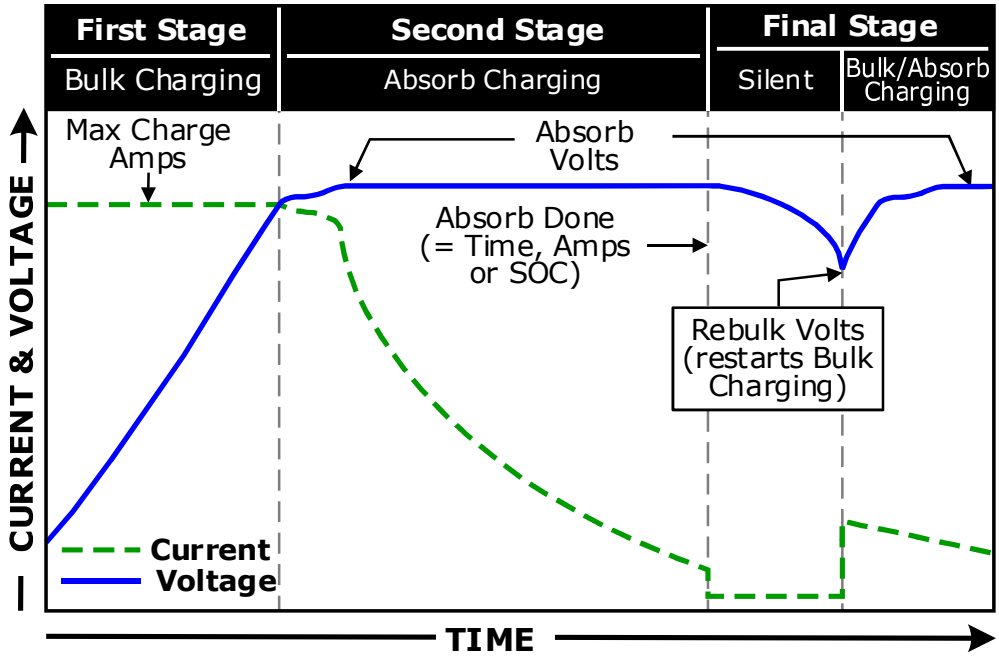

Figure 3-21, Final Charge Stage - Silent Stage

- **SETUP: 10 Pwr Up Always** – Allows the inverter to power up and provide AC power automatically once DC voltage is connected to the inverter.

Default setting: *Pwr Up = NO*

Range: *YES, NO*

What is the Power Up Always feature? Normally, when DC power is connected to the inverter, the user is required to press the power button—on the inverter or remote—to turn the inverter on. When the Power Up Always feature is activated by selecting *YES*, the inverter is automatically turned on and starts searching or inverting—depending on the *01 Search Watts* setting. Once the inverter has connected to DC power and is automatically turned on, the power button—on the inverter or remote—can be used to turn the inverter on or off.

Why use the Power Up Always feature? Some customers are familiar with Uninterruptible Power Supplies (UPS) that power-up automatically when DC power is connected. The Power Up Always feature can be used by customers that want to obtain the same automatic power-up feature with which they are familiar.

- **SETUP: 11 Bulk Always** – When this setting is turned ON, the charger automatically goes into the Bulk charge mode each time AC is connected to the inverter's AC input.

Default setting: *Bulk Always= OFF*

Range: ON, OFF

Info: The inverter has an internal two-minute timer that monitors the AC input source. If the AC input source goes missing and returns within two minutes, this timer forces the charger to return to the previous charge mode. This is done to prevent battery over-charging.

If the "Bulk Always" setting is turned on, it will not override this internal two-minute timer.

Why would I use the "Bulk Always" feature? Normally, when an AC source is connected to the inverter's AC input, the inverter makes a decision on which charge mode to enter based on the battery voltage level. If the battery voltage is at a high level (>13.0 for 12-volt inverters, >26.0 VDC for 24-volt inverters, or >52.0 VDC for 48-volt inverters), the charge automatically goes into the Float charge mode to keep from overcharging the batteries.

However, some battery types (i.e., Lithium) normally rest at a high voltage level. With these battery types, the charger would always go into float charge, which may not allow these battery types to be fully charged. Enabling the *Always Bulk* setting will force the charger to automatically go into the Bulk charge mode and go through a full charge each time AC is connected to the inverter's AC input.

3.3.5 TECH Menu

The TECH menu button provides access to selections that are used to assist service technicians in troubleshooting. It provides access to system information along with a selection that allows all system settings to be returned to the original factory default values.

- **TECH: 01 Temperatures** – Displays the various temperatures measured throughout the system. Rotate the SELECT knob to scroll through these temperature readings. The following read only temperature displays are available:

BTS: Displays temperature of the inverter's Battery Temp Sensor (BTS)—if one is connected to the battery bank.

Tfmer: Displays temperature of the main power transformer (Tfmer) inside the inverter.

FETs: Displays temperature of inverter's Field Effect Transistors (FETs).

AGS: Displays the temperature of the AGS (Auto Generator Start) temp sensor—if one is connected. If no AGS is connected, "*No Comm*" displays.

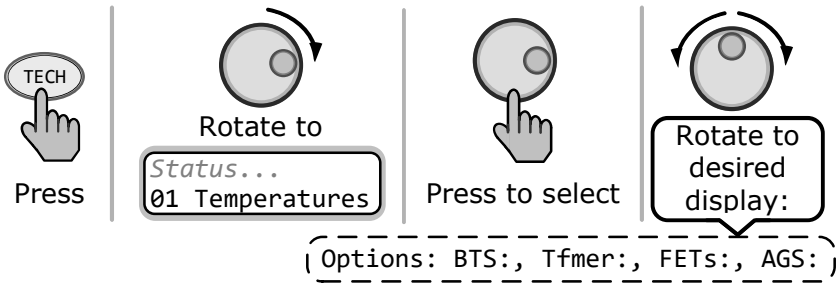

Figure 3-22, TECH: 01 Temperatures Display

- **TECH: 02 Revisions** – Displays the firmware revisions of the devices that are connected to the Magnum network. Rotate the SELECT knob to scroll through the revisions. The following devices display revisions (if connected to the remote): Inverter, Remote, AGS, BMK, and Router.

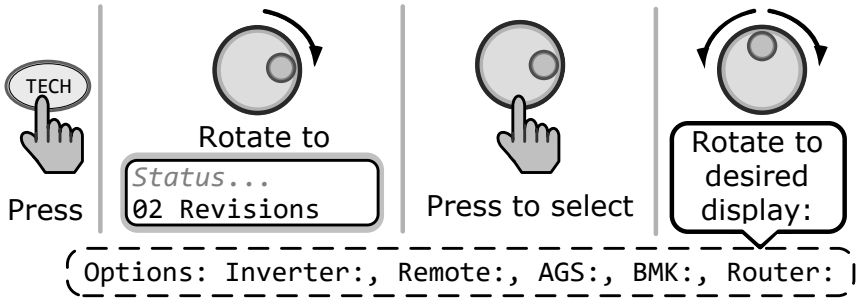

Figure 3-23, TECH: 02 Revisions Display

Info: The BMK, AGS, and the remote accessories may display a "*0.0*" revision. If this happens, then the accessory is not installed, there is no communication because of a bad or miswired network cable, the device is not powered, the device is bad, or the port on the inverter is bad.

- **TECH: 03 Inverter Model** – This read only menu displays the model number of the connected inverter.

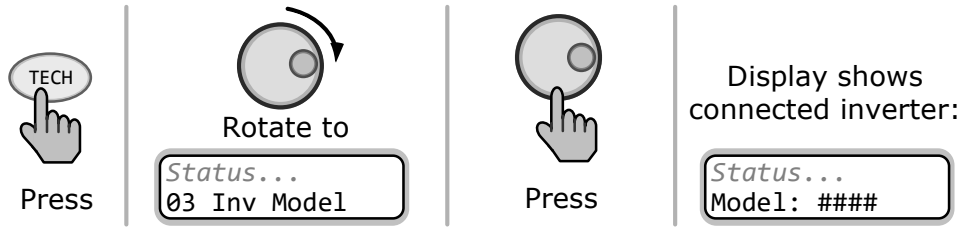

Figure 3-24, TECH: 03 Inv Model Display

Info: When "*Model: UNKNOWN*" is displayed, the remote is unable to determine the inverter model. This happens when the remote is connected to a later/newer inverter model not recognized by an older remote. All remote menu selections and features that are available in the inverter will function normally.

Info: The revision may display *"0.0"* for several reasons. Either the inverter is not installed, there is no communication due to a bad/ miswired network cable, or the inverter is not powered or not working.

- **TECH: 04 Load Defaults** – This menu restores all settings on the inverter/charger, and any settings on accessories that are networked and controlled by the inverter (i.e., ME-AGS-N) to the factory default settings. To restore, press and hold the rotary SELECT knob for 5 seconds. Once restored, the display will show *DEFAULTS LOADED*. The inverter/charger's factory defaults are listed in Table 3-5.

Note: *If a password (PIN) has been previously set, this menu will be unavailable (i.e., locked). Refer to the TECH: 06 SETUP PIN section on the next page for information on how to unlock this menu.*

Info: For information on the factory default settings for any networked accessory, refer to the owner's manual for that accessory.

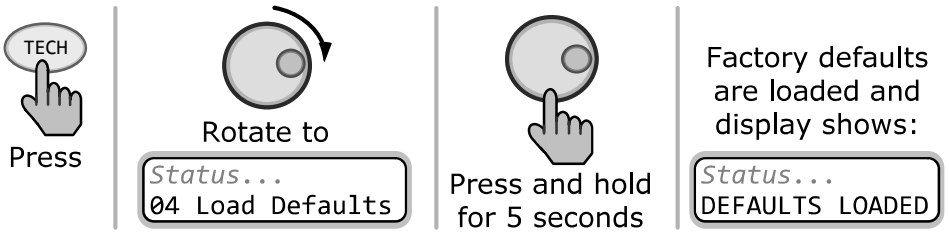

Figure 3-25, TECH: 04 Load Defaults Selection

Table 3-5, ME-RC's Inverter/Charger Default Settings

Menu Items		Default Settings
SHORE Pushbutton		Shore Max = 30A*
SETUP Pushbutton	01 Search Watts	Search = 5W
	02 LowBattCutOut	LBCO = 10.0 VDC (12-volt models), 20.0 VDC (24-volt models), or 40.0 VDC (48-volt models)
	03 Absorb Time	Absorb Hrs = 1.5
	04 Battery Type	BatType = Flooded
	05 Charge Rate	Max Charge = 80%
	06 VAC Dropout	Dropout = 80 VAC* (150 VAC for export models)
	07 Power Save	PwrSave = 15min
	08 Screen Setup	Contrast =100%
		Brightness =50%
	09 Final Charge	Final = Multi
	10 Power Up Always	Pwr Up = NO
	11 Bulk Always	Bulk Always = OFF

** - If using a dual-source model inverter (which has two AC source inputs), both the AC1 and AC2 inputs have the same default setting. The Shore Max = 30A, and VAC Dropout = 80 VAC).*

- **TECH: 05 Ext Control** – Some functions (*VAC Dropout, Charge Rate,* or *Shore Max* settings) of the inverter/charger can be controlled externally—by an external device. This display will show **INT** if the setting has not changed, even if an external device is in control; and show **EXT** if an external device is controlling the setting—and, the external device has changed the setting.

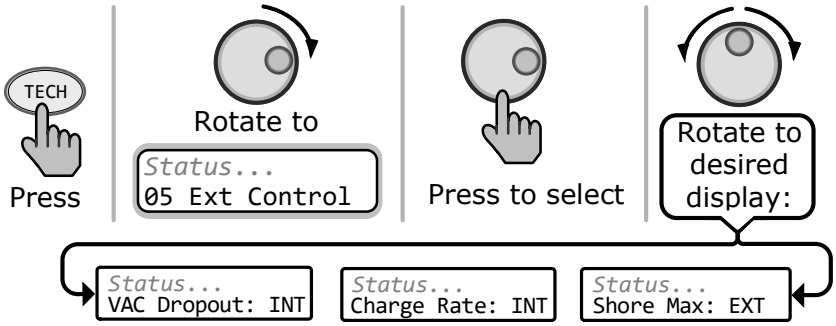

Figure 3-26, TECH: 05 Ext Control Display

Example: When an external device is connected and is changing one of the controllable functions, the text will change from "*INT*" to "*EXT*" to denote that particular function is being changed. In the example as shown in Figure 3-27 below, the *VAC Dropout* and *Charge Rate* settings are not being changed, but the *Shore Max* setting is being changed by the external device.

Figure 3-27, Example: Ext Control Scrolling Screens

- **TECH: 06 SETUP PIN** – This menu sets the password (PIN – Personal Identification Number) and locks/unlocks the ME-RC's SETUP button menus (as well as the TECH button's *04 Load Defaults* menu).

Why should I use the PIN feature? This feature is useful when the operation of the inverter has been set up by an experienced user or installer. Restricting access to menus with a password can avoid unauthorized changes to your settings by inexperienced users.

Setting a PIN

If a PIN has not been set, the SETUP menus are accessible. When you first enter (press SELECT) the SETUP PIN menu, "*PIN = 0000*" displays with the first "*0*" blinking. "*0000*" is the default setting when no PIN has been set.

From the *PIN = 0000* menu:

1. Rotate the SELECT knob to the desired number (0-9), and then press SELECT.
2. Repeat Step 1 to set the remaining three digits until the desired PIN number displays.
3. After pressing the SELECT knob for the last digit, the PIN is set. The *Unlock SETUP* menu displays. Rotate the SELECT knob to view the Lock SETUP and Change PIN menus.

   Unlock Setup – Press SELECT to allow all users to access the SETUP button menus.

   Lock Setup – Press SELECT to restrict access to the SETUP button menus to only those users with the valid PIN.

   Change PIN – Press SELECT to change the existing PIN.

Entering an Existing PIN

When entering a menu (or pressing the SETUP button) the "*PIN = 0****" menu displays. The correct PIN must now be entered in order to access the menu. If the incorrect PIN number is entered, "*Invalid PIN*" displays. (No limit on how many attempts can be made to enter the correct PIN number.)

From the *PIN = 0**** menu:

1. Rotate the SELECT knob to the correct digit, and then press SELECT.
2. Repeat Step 1 to enter the remaining three digits of the existing PIN.
3. After pressing the SELECT knob for the last digit, access to the remote/ menu is allowed. Refer to Step 3 in the 'Setting a PIN' procedure to lock/ unlock the SETUP button menus.

Info: After the correct PIN has been entered you do not need to reenter it to access another protected menu, unless five minutes have passed without any button push.

Changing an Existing PIN

Change your PIN at any time. However, to change an existing PIN, you must first enter that PIN in order to access the *TECH: Change PIN* menu item.

From the TECH menu's *PIN = 0**** setting:

1. Use the SELECT knob to enter the existing PIN (see above procedure).
2. Once the existing PIN is entered and you press SELECT for the last digit, the Unlock SETUP menu appears.
3. Rotate the SELECT knob to the *Change PIN* menu option, and then press the SELECT knob. The PIN entry menu appears with the current PIN displayed and the first PIN digit blinking.
4. Enter the new PIN (see the Setting a PIN procedure on previous page). ***Note:*** *"0000" is not a valid PIN.*
5. After pressing the SELECT knob for the last digit, the new PIN is set. You are returned to the PIN setup options menu where you can lock/unlock the SETUP button menus.

Resetting/Clearing a PIN

You can override a previously entered PIN. When "*PIN = 0****" displays, press and hold the SELECT knob until "*PIN = 0000*" displays (approximately 7 seconds). Enter a new PIN number as previously described.

4.0 Menu Map: ME-RC Remote Control

Figures 4-1 thru 4-3 are a complete overview of the inverter/charger settings and information displays available in the ME-RC.

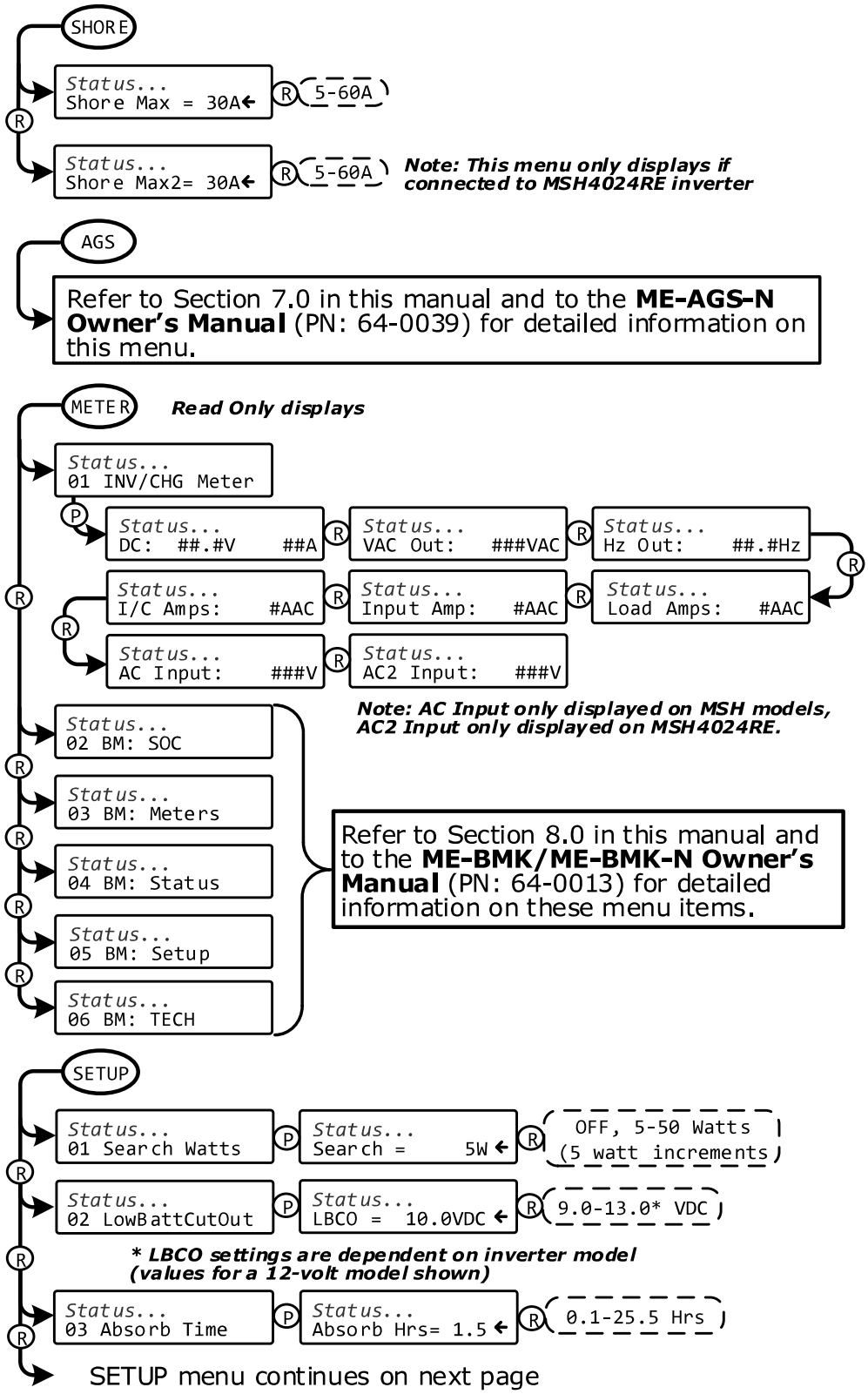

Figure 4-1, Inverter/Charger Menu Map

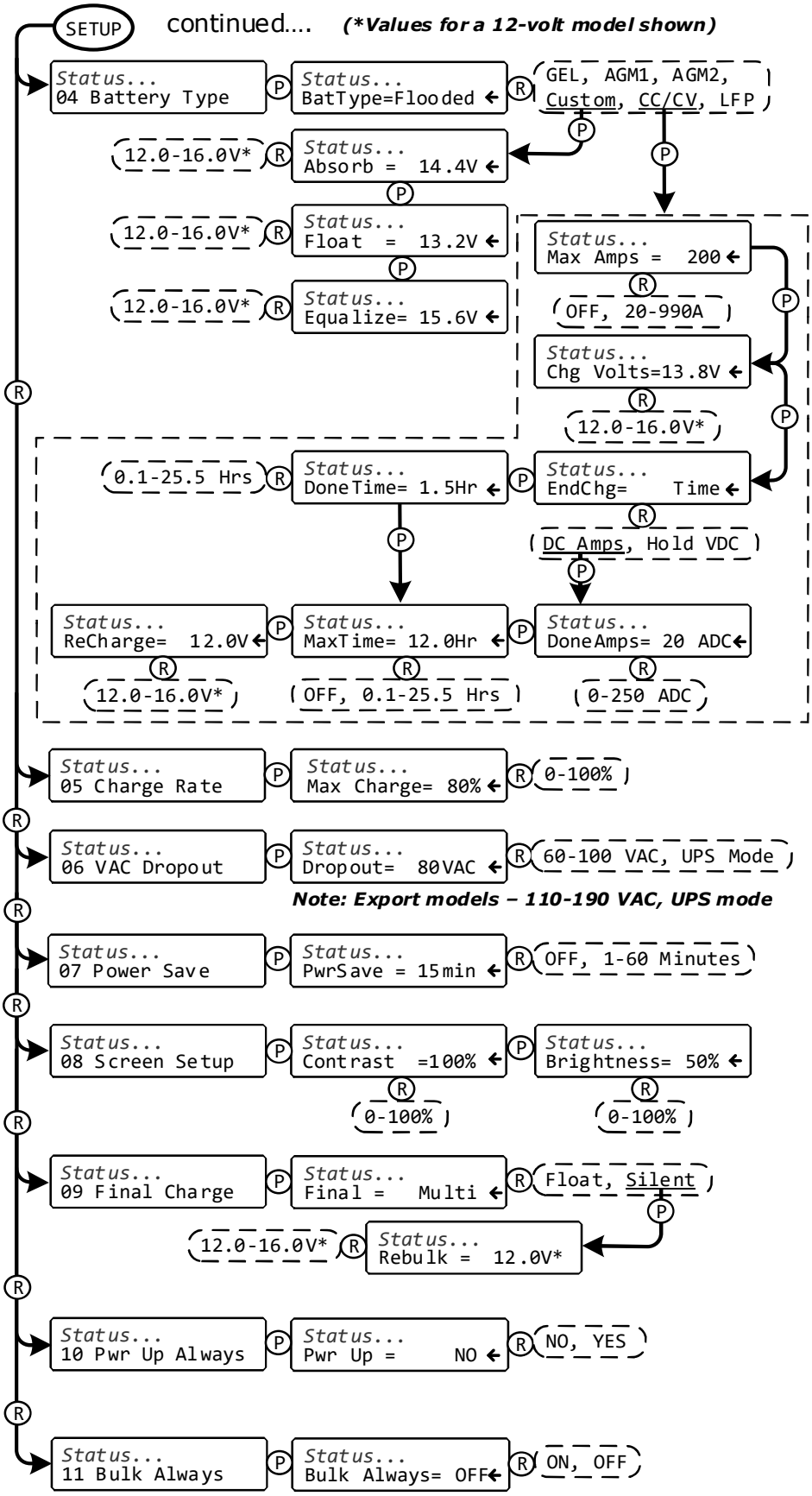

Figure 4-2, Inverter/Charger Menu Map

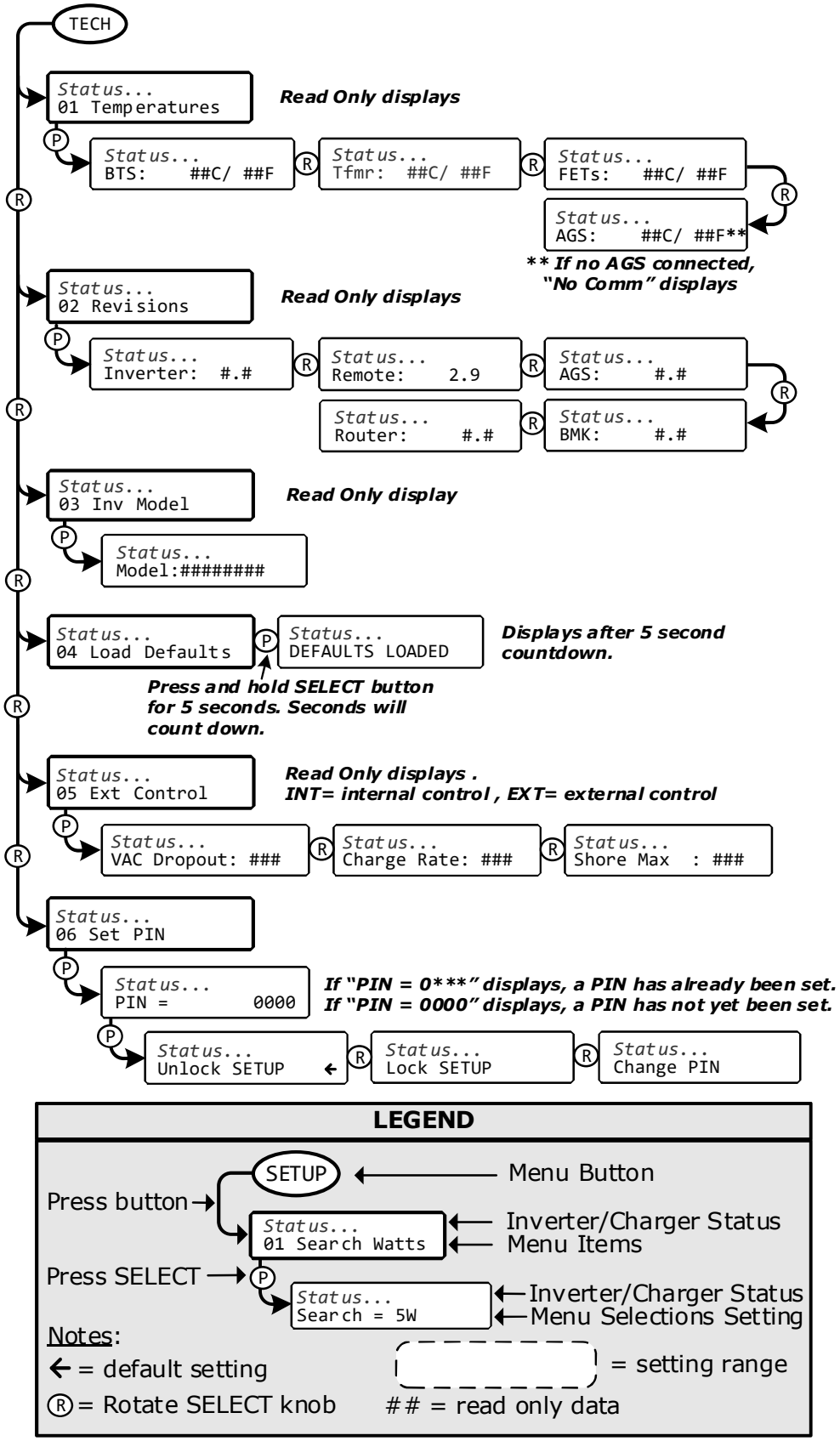

Figure 4-3, Inverter/Charger Menu Map

5.0 Operation

This section explains how to operate the inverter/charger using the ME-RC remote. It also provides information on the LED indicators and the LCD display that are used to show the operational status of the inverter/charger.

5.1 Front Panel

The ME-RC's front panel contains LED indicators and a LCD display for viewing system status, buttons to control system operation, and a rotary knob that enables you to locate and select system information and settings.

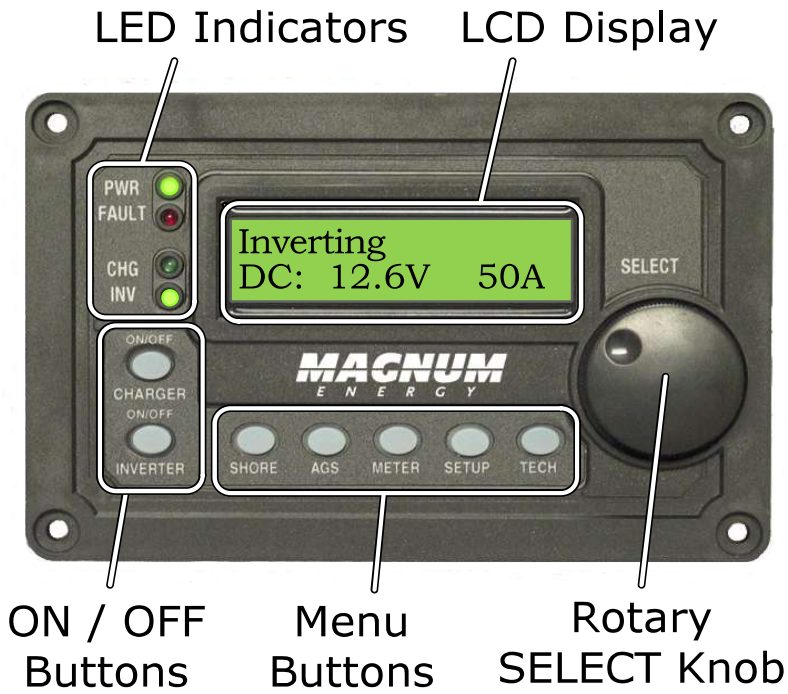

Figure 5-1, ME-RC Front Panel Controls and Indicator

5.1.1 LED Indicators

There are four LED indicators on the front panel that light solid or blink to indicate the inverter/charger's status. When the remote is first powered-up, all the LEDs come on as it goes through a self-test (see Section 2.5). Once the self-test is complete, the LEDs along with the LCD provide the operating status of the inverter/charger. See Section 5.3.4 for info on LED indicators.

5.1.2 LCD Display

The LCD display is used for setting up the system operation, as well as viewing the current operating status and fault conditions. This display has two lines of alphanumeric characters and features a backlight that can be set to turn off to conserve power. The top line provides the inverter/charger status, which is detailed in this section. The bottom line displays battery information while using the METER menu, system troubleshooting information while in the TECH menu, and displays menu items that can be configured for your specific system operation when using the SETUP menu. This display automatically powers-up with the current system status on the top line and the home screen (detailing the inverter's DC voltage and current as shown in Figure 5-1) on the bottom line.

5.1.3 ON/OFF Pushbuttons

- **ON/OFF INVERTER** – This button toggles the inverter function on and off. The green INV LED turns on and off with the button.
- **ON/OFF CHARGER** – This button toggles the charger function on and off whenever the charger is actively charging. The green CHG LED turns on and off with the button. This button is also used to initiate an Equalize charge. For more information on using the Equalize charge feature, see Section 5.2.2 and the Equalizing information on page 51.

5.1.4 Menu Buttons

These five buttons provide quick access to menu items that can help with configuring, monitoring and troubleshooting your inverter/charger system.

- **SHORE** – This button allows you to set the appropriate breaker size for the incoming utility/shore power and is used to control the amount of AC amps the battery charger uses from the HOT 1 IN input. See Section 3.3.1 for more detailed information.
- **AGS** – This button allows the networked Auto Generator Start (ME-AGS-N) controller to be configured to specific system preferences and enables you to check the AGS's status (when connected). Refer to Section 7.0 for detailed information on this menu.
- **METER** – This button provides meter information on the inverter/charger system. See Section 3.3.3 for more detailed information.
- **SETUP** – This button allows the inverter/charger to be configured to your specific system preferences. See Section 3.3.4 for more detailed information.
- **TECH** – This button allows you to access menu selections that can help service personnel with troubleshooting and also allows the factory default setting to be restored. See Section 3.3.5 for more detailed information.

5.1.5 Rotary SELECT Knob

The rotary SELECT knob is similar to a car dash radio knob, and is used to view and select various menu items and settings displayed on the LCD screen. Turn the rotary knob clockwise and counterclockwise to view the different menu items and available settings. Press the SELECT knob to select/enter a menu item or to save a setting once it is displayed on the LCD screen. Press and hold the SELECT knob for 10 seconds to refresh the LCD display.

CAUTION: An accessory that is networked to the inverter may have adjustable settings that revert back to default if all power to the inverter is lost. Refer to the owner's manual for the networked accessory to determine if any setting is affected.

Info: All adjustable inverter/charger settings in the ME-RC (except for the SHORE menu's *Shore Max,* the *01 AGS Control* setting under the AGS menu, and SETUP menu's *08 Screen Setup* settings (which all revert back to default) are saved in non-volatile memory and are preserved until changed—even if an inverter reset is performed, or if all power to the remote or inverter is removed.

5.2 Operating the Inverter/Charger

5.2.1 Inverter Mode

Turning the inverter on: Press the ON/OFF INVERTER button to activate the inverter function. The inverter will either be actively "inverting" by using power from the batteries to power the AC loads; or, the inverter will be "searching" for a load by using very little power from the batteries, if in Search mode. The green INV LED is on when the inverter is actively inverting, and flashes while searching.

Turning the inverter off: While the inverter is actively inverting or searching, press the ON/OFF INVERTER button to switch the inverter function off. This will turn the green INV LED off.

Inverter Standby – The inverter is a slave unit in a parallel stacked system. Inverter Standby occurs when the inverter is enabled (green INV LED is on), but not actively providing power from the batteries to the inverter loads. During Inverter Standby mode, the loads connected to the inverter are powered by the other inverters in the parallel stacked system. The standby inverter will come on automatically if the AC loads increase and require more inverter power.

5.2.2 Charger Mode

Turning the charger on: The Charge mode is automatically activated and begins when acceptable AC power (utility or generator) is connected to the input of the inverter. When in Charge mode, the display may show: *Absorb Charging, Bulk Charging*, *Charger Standby*, *Charging*, *Equalizing*, *Float Charging*, *Full Charge, Load Support AAC, Load Support VDC, and Silent*.

Charger Standby – While the charger is actively charging, press the ON/OFF CHARGER button to switch the charger to Charger Standby. While in Charger Standby, the incoming AC is still available on the inverter's output, but the charger is not allowed to charge. The LCD displays "*Charger Standby"* and the CHG LED flashes.

Info: To resume charging, press the ON/OFF CHARGER button or disconnect/reconnect AC power to the inverter's input.

Equalize charging: Equalizing is a "controlled overcharge" performed after the batteries have been fully charged. It helps to mix the battery electrolyte (to reverse the buildup of stratification) and to remove sulfates that may have built up on the plates. These conditions if left unchecked, will reduce the overall capacity of the battery. To enable the Equalization charge, see the information on page 51.

WARNING: Do not perform an Equalize charge without reading and following all safety precautions pertaining to charging/equalization as noted in this manual and provided by the battery manufacturer, and any equalization information in the inverter owner's manual.

CAUTION: Ensure your batteries can be equalized—only equalize your batteries if permitted by your battery manufacturer. Performing an Equalize Charge on batteries other than liquid lead acid or certain AGM types could permanently damage them. Refer to your battery manufacturer on how to properly equalize your batteries.

Info: Equalization charging is not available if GEL, AGM2, or LFP is selected under the SETUP menu's *04 Battery Type* menu.

5.3 System Status Messages

A status message may be an operational or fault message indicating the inverter/charger's current operating status. This section will cover the inverter/charger's operating and fault modes, and the available status messages under each mode.

Use the displayed status message and the status LEDs on your ME-RC remote (see Figure 5-2) to determine the inverter/charger's current operating status, and to help troubleshoot the system if a fault occurs.

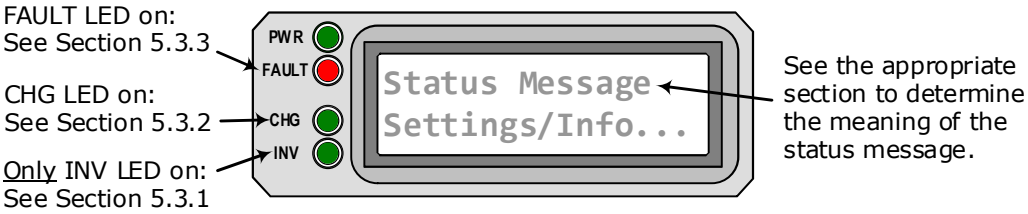

Figure 5-2, System Status Screen (Example)

There are three modes of operation for the inverter/charger:

Inverter modes:

- Inverting
- Inverter Standby
- No Inverter Comm
- Off
- Searching
- Unknown Mode ##

Charger modes:

- Absorb Charging
- AC Coupling
- Bulk Charging
- Charger Standby
- Charging
- Constant Current
- Constant Voltage
- Equalizing
- Float Charging
- Full Charge
- Load Support AAC
- Load Support VDC
- Silent

Fault modes:

- AC Backfeed
- AC Overload
- Breaker Tripped
- Dead Batt Charge
- FET Overload
- High Batt Temp
- High Battery
- High Volts AC
- Internal Bridge
- Internal Charger
- Internal NTC
- Internal Relay
- Low Battery
- Overcurrent
- Overtemp
- StackClock Fault
- Stack Mode Fault
- StackPhase Fault
- Stuck Relay
- Tfmr Overtemp
- Unknown Fault ##

5.3.1 Inverter Mode Status Messages

There are several Inverter mode messages. View the top line of the LCD display and the corresponding message in this section to determine and understand the particular Inverter mode.

- **Inverting** – The inverter is providing AC voltage on its output by inverting power from the batteries.
- **Inverter Standby** – The inverter is on but not actively providing power. However, the inverter remains active and an external AC power (utility or generator) is passing through the inverter to power the AC loads.
- **No Inverter Comm** – The remote is not receiving any communication data via the Magnum Network.

Remedy: Disconnect the remote communications cable from the inverter for five seconds, and then reconnect to reset the remote (see Figure 2-2). If the fault continues, examine the remote cable for damage, and replace if needed (4-wire telephone cable).

What if the cable is not the issue?

- Try another remote display
- Move the remote cable from the Remote port to the Network port
- The inverter may need servicing

- **Off** – This message tells you that there is no AC available on the inverter's AC output. The inverter function is OFF, and there is no utility or generator AC power sensed on its input.
- **Searching** – The inverter is in Search mode. This means the AC loads on the inverter output are less than the *SETUP: 01 Search Watts* setting. The Search mode function is used to reduce the inverter draw from the battery when the inverter loads are off. Turn the Search mode off if you want full inverter output voltage available at all times (see the Search Watts section).
- **Unknown Mode ##** – This status displays when the inverter/charger has sent an operational status code that the RC remote does not identify.

Remedy: Call Technical Support at DMX Power for assistance in identifying and understanding the actual status.

5.3.2 Charger Mode Status Messages

When AC power (utility or generator) is connected to the inverter/charger, it begins to monitor the AC input for acceptable voltage. Once the AC input is accepted, the AC transfer relay (inside the inverter) closes and charge mode begins. There are ten Charger mode status messages. View the top line of the LCD display and the corresponding message in this section to identify and understand the particular Charger mode.

Info: The AC input becomes acceptable after a minimum 12-second input qualifying delay and the voltage is greater than the *SETUP: 06 VAC Dropout* setting.

- **Absorb Charging** – The Absorb charge state is the constant voltage stage and begins when the absorb voltage is reached (determined by the *SETUP: 04 Battery Type* setting) while Bulk charging. During this stage, the DC charging current decreases in order to maintain the absorb voltage setting. This charge stage continues until the absorb charging time (determined by the SETUP menu's *03 Absorb Time* setting) is finished.

- **AC Coupling** – The inverter is in the AC Coupling mode because AC current is being pushed back into the inverters output. ***Note:*** *This status only shows when the inverter is a MSH Series inverter/charger.*
- **Bulk Charging** – The battery charger is delivering maximum current (determined by the SETUP menu's *05 Charge Rate* setting) to the batteries. The charger will remain in Bulk Charge until the absorb voltage (determined by the SETUP menu's *04 Battery Type* setting) is achieved.
- **Charger Standby** – This indicates the charger has been disabled to prevent further charging, but the AC power (from utility or generator) to the AC input is still available on the AC output. This display is shown when the ON/OFF CHARGER button is pressed while the AC power is passing through the inverter/charger.

Info: Press the ON/OFF CHARGER button to enable charging again. When enabled, the charger continues in the previous charge mode and the CHG (green) LED will come on solid (not flashing).

- **Charging** – Once Charger mode has been enabled, the unit waits and displays "*Charging*" to determine the charge routine. If the DC voltage is low (≤12.8 VDC/12v models, ≤25.6 VDC/24v models, or ≤51.2 VDC/48v models), the charger initiates bulk charging. If the DC voltage is high (≥12.9 VDC/12v models, ≥25.7/24v models, or ≥51.3/48v models), the charger skips the Bulk and Absorb charging stages and go directly to the final charge stage (Float or Silent).

Info: If battery type is CC/CV, the charger enters the Constant Current mode after "charging".

Info: If the LFP battery type has been selected, the charger will go into the Bulk charge mode each time AC is connected—regardless of the battery voltage. However, if AC is reconnected less than two minutes after being disconnected, the charger will return to the previous charge mode.

- **Constant Current** – The battery charger is delivering maximum current to the batteries (determined by the *Max Charge Amps* setting under the SETUP button's *04 Battery Type: CC/CV menu*). The charger will remain in Constant Current charge until the CV Charge Volts or Max CC/CV Charge Time is reached (determined by the settings under the SETUP button's *04 Battery Type: CC/CV* menu).

Note: *This status only displays if "CC/CV" has been selected from the SETUP button's 04 Battery Type menu.*

- **Constant Voltage** – This mode begins when the *CV Ch Volts* is reached (determined by the settings under the SETUP button's *04 Battery Type: CC/CV* menu) while in the Constant Current charge mode. During this stage, the DC charging current decreases in order to maintain the absorb voltage setting. This charge stage continues until the *EngChg setting (Time, Amps, or Hold)* or *MaxTime* settings under the SETUP button's *04 Battery Type: CC/CV* menu) is reached.

Note: *This status only displays if "CC/CV" has been selected from the SETUP button's 04 Battery Type menu.*

- **Equalizing** – This display indicates that the battery charger is delivering the equalize voltage to the batteries. See Table 3-4 to determine the equalize voltage for your battery type.

Equalize charging can be enabled by the ON/OFF CHARGER button if the *SETUP: 04 Battery Type* setting allows. Equalization charging can only be enabled while the charger is in Float Charge or Full Charge mode. To turn on Equalize charging, ensure the LCD display reads "*Float Charging"* or "*Full Charge"*, then press and hold down the ON/OFF CHARGER button (about five seconds) until the LCD screen displays "*Equalizing"*.

The Equalize charge will continue for four hours and then automatically stop and return to float charging. The Equalize charge can be manually stopped by pressing and holding down the ON/OFF CHARGER button (about five seconds) until the LCD screen displays "*Float Charging"*.During the Equalize Charge stage the batteries will begin gassing and bubbling vigorously, which consumes water. Ensure each cell has adequate distilled water levels prior to equalizing, and add water as needed after equalizing.

Why would I equalize? Equalizing helps to mix the battery electrolyte and attempts to reverse the build-up of stratification by removing sulfates that may have built up on the plates. These conditions if left unchecked, reduce the overall capacity of the battery bank.

How often should I equalize? Some experts recommend that heavily used batteries should be equalized periodically, ranging anywhere from once a month to once or twice per year. Other experts only recommend equalizing when the cells have a low specific gravity, or when the difference between any individual cell has a specific gravity reading greater than .015 after being fully charged.

How long should I equalize? While the batteries are gassing, monitor the specific gravity readings every hour. When the specific gravity readings no longer increase, the Equalization charge is complete and should be stopped.

WARNING: Equalizing produces excessive hydrogen and oxygen gas. This condition is not only corrosive, but can also be dangerous. Ensure the battery compartment can divert these gases away from the inverter to prevent corrosion; and has adequate ventilation to dissipate these gases in order to avoid explosions.

CAUTION: During the Equalize Charge stage the batteries will begin gassing and bubbling vigorously, which consumes water. Ensure each cell has adequate distilled water levels prior to equalizing, and add water as needed after equalizing.

CAUTION: If there are DC loads connected to you batteries, ensure they will not be damaged by the higher voltage applied during the Equalize Charge. If in doubt, disconnect the DC loads.

Info: Equalization charging is not available if GEL, AGM2, or LFP is selected under the SETUP menu's *04 Battery Type* menu.

- **Float Charging** – At the end of the absorb charge time, the charger reduces the charge voltage and tries to maintain the batteries at the Float Charge voltage setting. This is determined by the SETUP menu's *04 Battery Type* setting as shown in Table 3-4.

Info: Unless the Silent mode is enabled, when the battery voltage falls ≤12.1 VDC (12-volt models), ≤24.2 VDC (24-volt models), or ≤48.4 VDC (48-volt models) the unit will initiate bulk charging.

- **Full Charge** – This status indicates that you have entered the Battery Saver™ mode. This mode maintains the batteries without overcharging, and prevents excessive loss of water in flooded batteries or drying out of GEL/AGM batteries. After four hours of float charging, the charger turns off and "*Full Charge*" displays (charger is now in Battery Saver™ mode). If the battery voltage drops to ≤12.6 (12-volt models), ≤25.2 (24-volt models) or ≤50.4 (48-volt models), the charger automatically initiates another four hours of float charging. This cycle helps to ensure the batteries are maintained and continues as long as AC power is continuously connected to the AC input. "Full Charge" only displays if *Multi* is selected from the *09 Final Charge* menu.
- **Load Support AAC** – The inverter is in the Load Support (Amps AC) mode because the inverter load is requiring more power than the incoming AC source can provide on its own. The inverter pulls the additional current—that is needed for the loads—from the inverter batteries to keep the incoming AC current from exceeding the *SHORE: Shore Max* setting.

Info: The Load Support AAC feature operates in parallel with the AC input to support the inverter loads and is only available on MSH Series inverter/chargers. It is only active when the inverter is enabled (INV LED is on).

Info: When in Inverter Standby mode (charging and pass-thru), the current is normally a positive value. However, in Load Support AAC mode, the inverter amps reading is a negative number to indicate how much current is being provided/removed from the inverter's batteries. The inverter batteries will continue to provide current to assist the AC input current as long as the battery voltage stays 0.5 volts above the *SETUP: 02 LowBattCutOut* setting.

- **Load Support VDC** – The inverter/charger is in the Load Support (Volts DC) mode because an external DC source (solar, alternator, etc.,) is providing more current than needed—which causes the battery voltage to rise. The inverter/charger reduces the incoming AC current in an effort to keep the battery voltage from rising above the temp-compensated *04 Battery Type* setting.

Info: The Load Support VDC feature operates in parallel with the AC input to support the inverter loads and is only available on MSH Series inverter/chargers. This feature is only active in the Absorb or Float charge modes and when the inverter is enabled (INV LED is on); it is deactivated if the charger is in Charger Standby.

- **Silent** – This displays at the end of the Absorption stage if *Silent* is selected from the *09 Final Charge* menu. In Silent mode, the charger is not actively charging but does monitor the battery voltage. When the battery voltage reaches the *ReBulk* voltage setting (from *09 Final Charge Stage* menu) the charger will restart a Bulk and Absorb charge cycle, and then transition back into Silent mode at the end of the Absorb cycle.

5.3.3 Fault Mode Messages

The FAULT LED comes on and a fault status is displayed when an abnormal condition is detected. View the LCD display and use the information in this section to determine and correct the issue.

Info: Many of the faults will automatically restart when the fault is cleared. Some faults will require a manual restart (ON/OFF INVERTER button on remote is pressed and released). Finally, if the fault does not clear, an inverter reset (Section 6.2) may be required.

5.3.3.1 System Fault Messages

These faults are usually caused by an external issue that directly affects the inverter/charger system.

- **AC Backfeed** – This fault causes the inverter to shut down because AC voltage from an external AC source has been detected on the inverter's AC output. When the unit shuts down because of this condition, an inverter reset or power reset will be required to resume operation (see Sections 6.2 & 6.3).

Remedy: This fault usually occurs because the AC output wiring is connected to (or able to be connected to) the incoming AC source. When this fault happens, all system wiring should be re-checked to ensure the incoming hot and/or neutral wires are unable to be connected to the AC output.

- **AC Overload** – This fault message displays when the AC load on the inverter/charger's output has exceeded the inverter's AC current protection limits. If the overload lasts for less than 10 seconds, the unit will automatically restart and resume operation. However, if the overload occurs for more than 10 seconds, the unit will shut down and will require a manual restart.

Remedy: This fault usually occurs because the connected AC loads are larger than inverter's output capacity, there is a wiring short on the output, or the output wires are incorrectly wired. Once the AC loads are reduced or the output wiring is corrected, the inverter can be restarted after a manual restart has been accomplished.

- **Breaker Tripped** – The AC input breaker on the inverter/charger has opened due to excess current flow through the inverter to the AC loads.

Remedy: After reducing the AC loads, push in the inverter's AC input circuit breaker to reset and resume operation. Ensure the current to the inverter loads do not exceed the input breaker rating.

- **Dead Battery Charge** – This fault has detected a very discharged battery bank, or a battery bank not connected to the inverter. The unit is attempting to enter the Charge mode, but has detected that the battery bank is less than 9 volts (12-volt), 18 volts (24-volt) or 36 volts (48-volt).

Remedy: Check the DC voltage on the inverter's DC terminals and ensure it is the same as the battery bank—these two voltages should be very close (<0.5 VDC difference). If not, check to ensure all connections are tight and the fuse/circuit breaker between the inverter and battery bank is good.

This fault automatically clears if the AC input power is removed or when the voltage is greater than 12.6 volts (12-volt models), 25.2 volts (for 24-volt models), or 50.4 volts (for 48-volt models) as detected by the inverter.

- **FET Overload** – This fault message indicates the inverter/charger has shut down because the temperature of the internal FETs (Field Effect Transistors) started rising abnormally fast. When the FETs have cooled, the unit will require a manual restart to resume operation.

Remedy: Allow the inverter to cool down, then press the remote's INVERTER ON/OFF pushbutton (manual restart) to resume operation. If the fault returns, perform an inverter reset (see Section 6.2). If the fault continues to occur, disconnect all the inverter's AC output wires and perform a power reset (Section 6.3). If this fault does not clear after doing the power reset, the inverter will require service.

- **High Batt Temp** – This fault message indicates the inverter/charger has shut down because the Battery Temperature Sensor (BTS) has reached a temperature greater than 54°C/129°F.

Remedy: Once the BTS cools down (≤49°C/120°F) it automatically restarts and continues operation. Ensure the BTS hasn't been placed in a hot area or near a hot device. If this is not the issue, then monitor the BTS display under the *TECH/01 Temperatures* menu—this reading should be above 54°C/129°F. Now remove the BTS from the inverter BTS port. If the BTS reading goes to 25°C/77°F, replace the BTS. If the reading does not go to 25°C/77°F, then inspect the BTS port for cleanliness and/or have the inverter/charger serviced.

- **High Battery** – The inverter has turned off because the battery voltage is at a very high level. The fault occurs when the battery voltage is above the High Battery Cut-Out (HBCO) value. The inverter will automatically restart and resume operation when the battery voltage drops 0.3 VDC (12-volt models), 0.6 VDC (24-volt models), or 1.2 VDC (48-volt models) below the HBCO value.

Info: The HBCO value is dependent on your inverter revision and model. Normally, the HBCO value for ME/MM/RD Series inverters is preset to 16 VDC (12-volt models) or 32 VDC (24-volt models). The HBCO value for MS/MMS Series inverters is preset to 17 VDC (12-volt models), 34 VDC (24-volt models), or 68 VDC (48-volt models).

Remedy: This fault usually occurs when an external DC source is charging the inverter's battery bank. Turn off any other additional charging source to allow the DC voltage level to drop.

- **High Volts AC** – This fault causes the charger to be disabled because a very high AC voltage (>150 VAC, or >300 volts for export inverters) has been detected on the AC input.

Remedy: Remove all AC power from the inverter's AC input for at least 15 minutes to automatically reset this fault. Ensure only 120VAC power is connected to each of the inverter's AC inputs.

- **Internal Bridge**[1] – This fault message displays when the FET bridge shuts down after the inverter has been inverting—the inverter output circuit can no longer detect any AC output voltage or current.

- **Internal Charger**[1] – This fault message displays when the FET bridge shuts down because the charger circuit is trying to provide maximum current, but is not detecting a current or voltage rise to the battery bank.

- **Internal NTC**[1] – This fault message displays when the internal NTC (Negative Temperature Coefficient) sensor suddenly detected a very large but unexpected temperature change.

- **Internal Relay**[1] – This fault message displays when the internal AC transfer relay is not closed while charging.

Note 1: *The inverter continually monitors several internal components and will shut down to help protect itself if an "internal" faults occurs.*

Remedy: If an "internal" fault occurs, perform an inverter or power reset to clear it (see Sections 6.2 & 6.3). After the reset, press the ON/OFF INVERTER pushbutton on the remote to turn the inverter on. If the internal fault remains or returns, the inverter will require repair at an authorized service facility.

- **Low Battery** – The inverter turned off to prevent the batteries from being over-discharged. The fault message occurs when the battery voltage drops below the SETUP menu's *02 LowBattCutOut* (LBCO) setting for more than one minute.

Remedy: This fault clears and the inverter automatically will restart and resume operation after one of the following conditions: 1. If the battery voltage rises to the inverters LBCI level; or, 2. If AC power is connected to the inverter's input and battery charging begins.

- **Overcurrent** – This fault shuts down the inverter to protect internal power components. It may be caused by an excessive load connected to the inverter's AC output. If the overload condition lasts for less than 10 seconds, the unit will automatically restart and resume operation. However, if the overcurrent condition occurs for more than 10 seconds, the unit will shut down and will require a manual restart.

Remedy: This fault usually occurs because the connected AC loads are larger than the inverter's output capacity, there is a wiring short on the AC output, or the wires are incorrectly installed. Once the AC loads are reduced or the output wiring is corrected, manually restart the inverter to resume operation. If this fault condition continues after all these recommendations, perform a inverter reset (see Section 6.2).

- **Overtemp** – This fault message indicates the inverter/charger has shut down because the internal power components (FET's and/or transformer) have exceeded their safe temperature operating range. Once the unit has cooled down, the fault automatically clears and the unit will automatically restart and continue operation.

Remedy: If this fault occurs while inverting, reduce the inverter loads. If it occurs when charging, lower the charge rate. If this fault happens often, ensure the inverter is not in a hot area, has proper ventilation, and the cooling fans inside the inverter are working.

- **StackClock Fault** – There is a stacker cable problem; or, one inverter is losing synchronization with the other inverter.

Remedy: Ensure you are using a Magnum Stacking Cable (this is not a telephone/data cable, this is a custom made cable). Inspect the stacker cable and reconnect at both ends (listen and make sure you hear an audible "click" from the connectors at both inverters).

Info: This fault has been known to occur when a Magnum Energy accessory is plugged into the inverter's Stack port, but the installation is not using multiple inverters in a stacked configuration. If this occurs, perform an inverter reset (see Section 6.2).

- **Stack Mode Fault** – This unit has detected a problem with the "other" stacked inverter. Check that unit for a fault condition.

Remedy: This fault will automatically clear when the fault with the other inverter is corrected.

- **StackPhase Fault** – 1. The AC input wiring is incorrect; 2. One phase was lost from the AC input source; 3. One of the inverter's internal transfer relays is bad; or, 4. The inverter's AC input circuit breaker may be open.

Remedy: If this fault doesn't clear after checking these four recommendations, perform an inverter reset (see Section 6.2).

- **Stuck Relay** – This fault message displays when the inverter is "inverting", but the internal AC pass-thru relay that should be open while inverting, is closed.

Remedy: The AC pass-thru relay is most likely stuck. A relay usually sticks because of damage to the contacts from trying to handle currents greater than they are rated. This is usually caused by not protecting the relay or by switching high current inductive loads. The internal relay contacts are rated to handle 30 amps AC continuously and should be protected with an input breaker sized no larger than 30 amps. If you are connected to an AC source (grid or generator) and running large inductive loads (i.e., pumps, motors, etc.,) on the inverter output, turn those particular loads off prior to removing the AC input source. This fault requires an inverter or power reset (Sections 6.2 and 6.3) to clear.

- **Tfmr Overtemp** – This fault message is displayed when the TCO (Temperature Cut-Out) opens and causes the inverter to shut down to protect the internal power transformer from damage. When the TCO has cooled down, the inverter will automatically restart and resume operation.

Remedy: If the fault continues to occur, disconnect all the inverter's AC output wires and reset the inverter (see Section 6.2). If this fault does not clear after doing a reset, the inverter may require service.

- **Unknown Fault ##**– This fault message displays when the inverter/charger has sent a fault code that cannot be determined by the remote.

Remedy: Contact the Magnum Technical Support team to assist you.

5.3.4 LED Indicator Guide

Use the LEDs along with the LCD display to determine the operating status.

Table 5-1, LED Indicator Guide

LED	Status	Meaning
PWR (green)	OFF	1. Inverter is disabled; 2. Remote is in Power Saver mode – press any button to activate LEDs; 3. No power to remote (check remote cable or power to inverter); or, 4. No AC power at the inverter's AC output terminals.
	ON	AC power is available from inverter, shore, or generator at the inverter's AC output terminals.
FAULT (red)	OFF	Normal operation.
	ON	A fault condition has been detected. Check the LCD display to find and correct the cause.
CHG (green)	OFF	1. Remote is in Power Saver mode – press any button to activate LEDs; or, 2. Charger off – no utility or AC generator present.
	ON	Bulk, Absorb, Float, or Equalize Charge mode (see LCD display to determine charge status).
	BLINKING, display says "*Charger Standby*"	The charger is in Charger Standby mode. This occurs when the ON/OFF CHARGER button is pressed to disable the charger.
	BLINKING, display says "*Full Charge*" or "*Silent*"	The charger is in Battery Saver mode. This mode monitors battery voltage level and only charges if the battery voltage decreases to a low level. Silent mode will automatically start charging when the *Rebulk* setting is reached.
	BLINKING, display shows a charging status (i.e., Bulk, Absorb, Float)	The charger current is automatically decreased because: 1. Charger Back-off – the inverter's internal temperature is getting hot, current is decreased to reduce/maintain temperature; or, 2. Low AC Input Voltage – the input AC voltage is low, charger is disabled to help stabilize incoming AC voltage to prevent AC disconnect.
	BLINKING, display does **not** show any charge status	The inverter is detecting AC voltage (from utility or an AC generator) on the inverter's AC input terminals.
INV (green)	OFF	1. Inverter disabled; or, 2. Remote in Power Saver mode – press any button to activate LEDs.
	ON	Inverter is enabled – 1. Supplying AC power on the output; or, 2. In Inverter Standby (if both INV and CHG LEDs are on); the inverter will automatically supply AC power to the loads if shore or generator power is lost.
	BLINKING	Inverter is in Search mode (the AC load is below the SETUP menu's *01 Search Watts* setting).

6.0 ME-RC Remote Troubleshooting

The remote may not be functioning correctly, use the following table to help find a solution.

Table 6-1, Remote Control Troubleshooting Guide

Symptom	Possible Cause	Solution
Display shows unrecognizable letters or symbols	Static electricity may have been discharged into the LCD display.	**Refresh display**: Press and hold the SELECT button for 10 seconds.
Display shows "*fatal error*" or "*illegal address*"	The remote's internal data addressing was unrecognizable.	**Reset remote**: Disconnect remote communications cable from inverter for 5 seconds and reconnect (see Figure 2-2).
LCD text display is locked-up, pressing any button has no response – may show "*revision*" or "*connecting*"	RJ11 connections on communication cable are not making a good connection.	**Reset remote**: 1) Disconnect remote cable from inverter for 5 seconds and reconnect; 2) Check RJ11 cable connection on back of remote (see Fig. 2-2). Important: Ensure the RJ11 connector is pushed into the correct port. You should feel/hear "click" when the connection is made.
	Remote not getting sufficient power from inverter.	Ensure inverter batteries are connected and inverter is operating correctly. Inverter should be able to invert and power AC loads from batteries (ensure no AC power is connected to the inverter AC inputs).
LEDs and backlight are off	Remote may be in the Power Saver mode.	Press any button to reactivate the remote (or turn Power Saver mode *OFF*).
Remote is nonfunctional (no lights, no text on LCD display, and no response when pressing any button)	Communication cable bad or not correctly connected to REMOTE port on inverter.	Check communications cable from inverter to remote; ensure: 1) it is connected to the REMOTE port, 2) the correct communications cable is used (a 4-conductor telephone cable may be substituted to determine if cable is good).
	Inverter is not connected to batteries.	Ensure inverter batteries are connected and the inverter is operating correctly without any AC power connected (can invert and power AC loads from batteries).

6.1 Inverter/Charger Troubleshooting Tips

6.1.1 Inverter Problems

- **Inverter turned on, green INV LED on inverter blinking, no output:** Inverter is in Search mode. Either turn off Search mode—if not needed—or turn on loads greater than the *Search Watts* setting.

6.1.2 Charger Problems

- **Unit won't transfer to Charge mode with AC applied:** Is charge (CHG) LED on remote blinking? If not, then the charger does not recognize the incoming AC being within acceptable limits. Measure the input AC voltage at the inverter input terminals—should be 120VAC +/ 20 VAC (230 VAC +/- 40 VAC for export models). Also, check that the *VAC Dropout* setting on the remote is 80 VAC or less (160 VAC or less for export models). If the CHG LED is blinking, the transfer relay should close within 20 seconds and the unit should then begin charging. If the LED is on solid, the transfer relay should be closed and the charger should be charging.
- **Transfer relay closes, then opens and continues to cycle:** AC voltage is too low, or has transients that drop the AC voltage momentarily. Change the *VAC Dropout* setting to 60 VAC (110 VAC for export models) and check for improvements. If the cycling continues, back off the *Charge Rate* from *100%* to *10%* (or *OFF*, if available).

This cycling may also occur if the AC output of the inverter is connected to the inverter's AC input. Check for proper input and output AC wiring.

- **Charger not charging even though CHG LED is on steady and the unit says "*Charging*":** Full charge rates are not obtained in Charging mode, only obtained after this mode changes to Bulk Charging, Absorb Charging, or Float Charging modes.
- **Charger not charging even though CHG LED is on steady and the unit says "*Bulk Charging*" (or "*Absorb Charging*"):** Check the *DC Amps* and the *DC Volts* meters on the ME-RC display, it should be 80% or more of rated charge current if the battery voltage is under 14.0 VDC (28.0 VDC on 24-volt models or 48.0 VDC for 48-volt models). If not, check the *05 Charge Rate* setting and verify the setting is 80% or greater. Still low charge rate? Check the *Shore Max* setting to verify. If no AC loads are being 'passed thru' the inverter, the S*hore Max* setting must be 15 amps (25 amps for 3kW unit) or greater, to receive full charge rate.
- **Charger says "*Float Charging*" not "*Bulk Charging*" when the AC is first plugged in:** Check the *DC Volts* meter on the ME-RC display. If the battery is over 13.0 VDC (26.0 VDC for 24-volt models or 52.0 VDC for 48-volt models) then the battery was already charged, and the charger automatically goes to Float Charging to keep from overcharging the batteries.
- **Charge amps are lower than expected, or is 0 amps DC:** Measure input AC voltage and increase if the input voltage is under 90 VAC. The charge rate is reduced to keep the input voltage above 90 VAC. Also, check the *Shore Max* and *05 Charge Rate* settings to determine if the current is being limited.
- **Charger output voltage is higher than expected:** Check the Battery Temperature Sensor (BTS) temperature. If the BTS is installed, the charge voltage settings will increase if the temperature around the BTS is below 77° F (25° C), and will decrease if the temperature around the BTS is higher than 77° F (25° C).

6.2 Performing an Inverter Reset

To perform an inverter reset (i.e., "soft reset"):

1. Remove all AC power (utility or generator power) to the inverter.
2. Press and hold the inverter's Power ON/OFF pushbutton (see Figure 6-1) for approximately fifteen (15) seconds—until the inverter's Charging/ Inverting Status LED comes on and flashes rapidly.
3. Once the rapid flashing has begun, release the Power ON/OFF pushbutton. The Status LED will go off after the button is released.
4. After the inverter reset is completed, press the inverter's Power ON/OFF pushbutton to turn on the inverter.

Some older inverter models do not allow an inverter reset. If the inverter reset fails, you will need to perform a power reset using the procedure below. In either case, if an internal fault does not clear the inverter will require repair at a Magnum Authorized Service Center (ASC).

Info: The Power ON/OFF pushbutton is a small momentary type switch which operates by lightly pressing and releasing.

Info: All adjustable inverter/charger settings in the ME-RC (except for SHORE menu's *Shore Max* and SETUP menu's *08 Screen Setup* settings (which revert back to default) are saved in non-volatile memory and are preserved until changed—even if an inverter reset is performed, or if all power to the remote or inverter is removed.

1. Ensure all AC power (i.e., shorepower or generator) is removed from the inverter's input.
2. Press and hold the Power ON/ OFF pushbutton for 15 seconds.
3. Watch the Charging/Inverting Status LED, after approximately 15 seconds it should come on and flash rapidly to indicate the inverter has reset. The Status LED will go off after the pushbutton is released.

Figure 6-1, Performing an Inverter Reset

6.3 Performing a Power Reset

To perform a power reset (i.e., "hard reset"):

1. Remove all AC power (utility or generator power) to the inverter.
2. Open all the inverter DC disconnects (or disconnect the positive battery cable to the inverter).
3. Ensure the inverter and the remote are disconnected from all AC and DC power (the remote display will be blank).
4. After the inverter has been disconnected from all power for 30 seconds, reconnect the inverter DC disconnects (or reconnect the positive battery cable) and resume operation.

Info: If DC disconnects are not used, there may be a momentary spark when the positive battery cable is connected to the inverter's terminal. This is normal and indicates that the inverter's internal capacitors are being charged.

7.0 Using an AGS

The ME-RC remote's AGS menus under the AGS and TECH buttons allow you to customize and monitor the operating parameters of the ME-AGS-N (Automatic Generator Start - Network) controller. To help configure and operate the AGS with your ME-RC, refer to the mini index below to direct you to the appropriate section.

7.1 AGS Setup page 61
7.2 AGS Functional Tests page 65
7.3 AGS Operation/Monitoring page 65
7.4 Enabling the AGS page 68
7.5 Starting and Stopping the Generator page 68
7.6 AGS Menu Map page 69

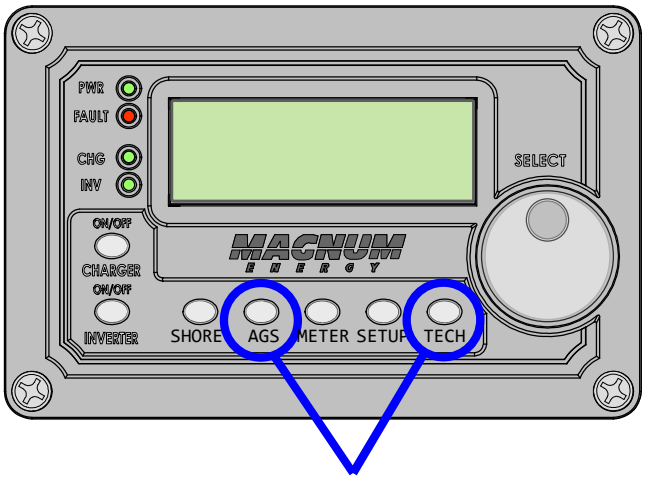

Figure 7-1, ME-RC's AGS Configuration Access Buttons

7.1 AGS Setup

Press the AGS button on ME-RC remote (Figure 7-1), and then rotate the SELECT knob to navigate to the AGS menus. These menus allow the generator to be automatically started and stopped based on different parameters. Using Table 7-1, determine the specific autostart and autostop condition with which you want the generator to be automatically controlled, and then use that specific menu setting to configure the AGS.

Note: *For information on using the AGS: 01 AGS Control, AGS: 02 AGS Status, and AGS: 08 AGS TECH menus, refer to Section 7.3 "AGS Operation/ Monitoring".*

Table 7-1, ME-RC Autostart/Autostop Matrix

Autostart Condition	See AGS Menu	Autostop Condition	See AGS Menu
Gen starts on high temperature, or	04 Start Temp F (page 62)	Gen stops after a set time period, or	03 Run Time Hour (page 62)
Gen starts on low inverter battery voltage	05 Start Volts (page 63)	Gen stops at Quiet Time	07 Quiet Time (page 64)

AGS: 03 Run Time Hour Menu

This menu provides the settings that determine the length of time the generator will run once it has been autostarted by the AGS.

Default setting: *Run Time = 2.0 Hrs*

Range: *0.5 - 25.5 Hrs (0.5 hr increments)*

How long should I set the generator run time? This depends on whether you are using the high temperature or low battery voltage autostart feature.

- **Using high temperature to autostart:** When using the high temperature autostart feature, the generator autostarts and runs until the *AGS: 04 Start Temp F* setting is reached. This means you could set the time to the lowest time setting (*0.5 Hrs*), knowing the generator will run until the temperature setting is satisfied.
- **Using low battery voltage to autostart:** When using the low battery voltage autostart feature, the generator run time is normally set to help recharge the batteries. Use Table 7-2 below to help determine the generator run time setting based on the 20-hour AH capacity of your inverter's battery bank.

Table 7-2, Battery AmpHrs Capacity to Suggested Gen Run Time

Battery AmpHrs Capacity	Suggested Gen Run Time	Battery AmpHrs Capacity	Suggested Gen Run Time
200 to 300	1 hour	1310 to 1500	4 hours
310 to 500	1.5 hours	1510 to 1700	4.5 hours
510 to 700	2 hours	1710 to 1900	5 hours
710 to 900	2.5 hours	1910 to 2100	5.5 hours
910 to 1100	3 hours	2110 to 2300	6 hours
1110 to 1300	3.5 hours	2310 to 2500	6.5 hours

AGS: 04 Start Temp F Menu

This menu allows you to set and enable a temperature value that will cause the generator to automatically start—to power an air conditioner (A/C) unit for cooling—based on an increase in temperature, or by using an air conditioning thermostat control.

Info: Optional ME-PT1 or ME-PT2 pigtail adapters can be used to connect an AC control circuit or a relay control circuit. For more info, refer to the instruction sheet for each pigtail adapter—part # 64-0025 (ME-PT1 instructions), or #64-0026 (ME-PT2 instructions).

This temperature autostart feature requires that the AGS's remote temperature sensor cable or an optional ME-PT1 or ME-PT2 pigtail adapter be connected to the REMOTE port on the AGS. The location of the remote temperature sensor determines the area being monitored for temperature. When the temperature around the remote temperature sensor (based on the *AGS: 08 AGS TECH* menu's *Temp* display) increases to the *AGS: 04 Start Temp F* setting, the generator automatically starts and runs based on the *AGS: 03 Run Time Hour* setting. When this run time period is finished, the temperature sensor reading is checked. If the temperature sensor (or thermostat control—if using the optional pigtail adapter) reading is below the *AGS: 04 Start Temp F* setting, the generator will autostop. If the temperature

sensor (or thermostat control) reading is above the *AGS: 04 Start Temp F* setting, the generator will continue to run for a second run time period. At the end of this second run time period, the temperature sensor reading (or thermostat control) is checked again. This cycle continues as long as the *AGS: 01 AGS Control* menu is set to *Enable* (or *Enable w/QT*).

If the temperature autostart feature is not needed, set to the *OFF* position.

- **65F - 95F** – This setting determines the rising temperature value that will trigger a generator autostart.
- **Ext Input** – This setting is used when an optional AGS adapter (PT1 or PT2) is used. When an AGS adapter is connected to the AGS's REMOTE port, an external command from a thermostat connection on an A/C control unit causes the generator to start. See the ME-PT1 or ME-PT2 instruction sheets for info on pigtail adapters. (See *08 AGS TECH: Temp*)

Default setting: *StartTemp = OFF*

Range: *OFF, Ext Input, 65F - 95F (5 deg. increments)*

Why should I use Start Temp? Typically, in a mobile application (RV or boat) where the A/C unit is too much power for the inverter to run from the batteries, this feature is used to start the generator to run an A/C unit. Many RV and marine customers travel with pets and do not want them to be at risk from dangerous inside temperatures if they are away from the coach/boat. With this feature, you can set the A/C to turn on and then leave. If the inside temperature rises to the start setting, the generator automatically starts to provide power to the A/C unit. This keeps the area cool and comfortable—plus, while the generator is on, the inverter batteries are being charged.

Where should I set Start Temp? If you are using this feature to power an air conditioning unit, the *AGS: 04 Start Temp F* setting should be slightly above the A/C unit's thermostat "cool" temperature (usually around 70-72F). Once the temperature setting is reached, the generator will start providing power to the A/C unit. The reason the temperature is set above the A/C unit's thermostat is to ensure the A/C unit will run when the generator starts. If the AGS's temperature setting is below that of the air conditioning unit's thermostat setting, the generator will run, but the A/C unit is not calling for a run period or cooling; your generator is running, but the power is not being used by the A/C unit—resulting in wasted fuel and run time.

Info: If using temperature to autostart a generator that is powering two A/C units, it is suggested that the second A/C unit's thermostat be set 2° to 5° higher than the first A/C unit. This staggered setting will allow the first A/C unit to start and run in an effort to keep the coach cool. If the temperature continues to rise inside the coach, the second A/C unit will turn on to further cool the coach.

AGS: 05 Start Volts Menu

This menu allows you to set and enable a battery voltage value that causes the generator to automatically start. Starting the generator on voltage is the most common method of autostarting the generator—it is considered the simplest and easiest to understand. When the battery voltage (on Terminals #3 & #4) decreases to or below this setting for two continuous minutes, the generator will automatically start and run based on the *AGS: 03 Run Time Hour* setting. If the DC voltage start feature is not needed, ensure this setting is set to the *OFF* position.

Default setting: *Start VDC = 11.0 VDC (12v), 22.0 VDC (24v), 44.0 VDC (48v)*

Range: *10.0-12.2 VDC (12v), 20.0-24.4 VDC (24v), 40.0-48.8 VDC (48v)*

Info: The default settings and range are automatically determined based on the connected inverter and the measured VDC.

Where should I set Start Volts? When setting the VDC start voltage, it must be high enough to not over-discharge the battery, but also low enough to keep from nuisance starting the generator. Typically, start volts is set based on what is determined to be approximately 50% of the battery capacity. Since this is an inverter/battery system, and the battery is normally loaded, the VDC used to determine 50% battery capacity should be set lower than what is shown on typical battery voltage SOC charts (approximately 11-11.5 in a 12-volt system), which show the battery at rest (not loaded).

Info: The DC voltage the AGS uses to determine when to autostart is displayed in the *AGS: 08 AGS TECH* menu under the *AGS VDC* meter.

AGS: 06 Set Time Menu

This menu is used to set the ME-RC remote's internal clock. The ME-RC contains a real time clock that must be set for proper operation of the AGS button's *07 Quiet Time* feature. If the Quiet Time feature is not used, the time does not need to be set.

Info: The clock obtains power from the inverter and resets if the ME-RC is disconnected from the inverter, or the inverter is powered down.

To set the current time:
(From the *06 Set Time* menu)

- **Hour** – Rotate the SELECT knob to the correct hour of day, and then press SELECT.
- **Minute** – Rotate the SELECT knob to the correct minute setting, and then press SELECT.
- **AM-PM** – Rotate the SELECT knob to the appropriate AM or PM setting, and then press SELECT.

AGS: 07 Quiet Time Menu

This setting is used to prevent the generator from autostarting during a specific designated time period each day.

Info: If the generator is running when the Quiet Time start time setting is reached, it automatically stops and does not allow the generator` to autostart until after the Quiet Time stop time setting has passed.

To enable, access the *Quiet Time* menu and select a time period.

Default setting: *Quiet = OFF*

Range: *OFF, 9PM-7AM, 9PM-8AM, 9PM-9AM, 10PM-8AM, 11PM-8AM*

Why should I use Quiet Time? Quiet Time is used when there are park rules or local noise regulations that prevent generators from running during a certain time. It is usually set in consideration of when people may be sleeping. If there are no local rules or regulations, you may not want to use Quiet Time—which would allow the generator to run at any time in a 24-hour period.

Where should I set Quiet Time? Select the time period that coincides with any local noise requirements, or any time period that you do not want the generator to automatically run.

7.2 AGS Functional Tests

Once you establish all the autostart/autostop settings you need, perform the following tests to verify that the AGS system is functioning correctly and the communication from the remote/inverter to the ME-AGS-N is correct.

7.2.1 Remote to Generator Communication Test

This section describes how to determine the current AGS status and how to use the ME-RC remote to start the generator.

7.2.1.1 Determining AGS Status

Use your ME-RC to determine the AGS's status by pressing the AGS button, rotating the SELECT knob to the *02 AGS Status* menu, and then pressing the SELECT knob.

The AGS's status should be *Off* or *Ready*. If it displays either status, then the remote/inverter is correctly communicating with the AGS. If the AGS status displayed is not *Off* or *Ready*, then refer to Section 7.8.2 "Resolving Operational Statuses" or Section 7.8.3 "Resolving Fault Statuses" for assistance before continuing.

7.2.1.2 Starting the Generator from the Remote

To confirm that the generator will turn on and run from the remote:

1. Press the AGS button, the bottom line of the remote should display the *01 AGS Control* menu.
2. Press the SELECT knob and rotate it to *AGS = Test*.
3. Press the SELECT knob to activate the generator test.

Once the generator starts, it should run for approximately 30-60 seconds before automatically turning off. View the AGS module's STATUS LED and ensure it turns solid green (solid green STATUS LED means the generator has started successfully and is providing the gen run sense signal to the AGS module).

Note: *If the generator attempted to start but did not run, continue to wait, the AGS will attempt to start the generator 3 more times.*

If your AGS/generator system passes all three steps (may attempt an autostart 4 times), then the wiring from the AGS to the generator is correct. You are now ready to activate the AGS using your remote control panel.

Info: The AGS attempts to start the generator 4 times. If after 4 attempts the generator fails to start, the STATUS LED turns red—indicating a fault.

If the remote control displays an AGS fault (under *02 AGS Status*) or the AGS module's STATUS LED shows a fault condition (solid red LED indication), refer to Section 7.8.3 for assistance.

7.3 AGS Operation/Monitoring

This section covers the AGS menus in the ME-RC remote that determine how to control and operate the generator. The section also includes menus that are used to monitor starting and running conditions for the AGS and the generator.

7.3.1 Controlling the AGS using the ME-RC

Press the AGS button, and then rotate and press the SELECT knob to access the following menus:

AGS: 01 AGS Control Menu

This menu is used to enable the AGS (selecting *Enable* or *Enable w/QT*). A "*Test*" setting is also available to ensure the start/stop wiring from the generator to the ME-AGS-N is correct. The available settings are:

- **OFF** – This option disables the AGS's generator start/stop functions. It also turns the generator off if it is running from an autostart command. When *OFF* is selected, the generator will not start automatically. This is the default setting. If you have an AGS fault, select *OFF* to clear it.

Info: If DC power is lost to the remote or to the system, this menu resets to the default *OFF* position for safety.

- **Enable** – Select this option to have the AGS monitor temperature (*04 Start Temp F*) and/or the inverter's battery voltage (*05 Start Volts*) to determine when to automatically start the generator.
- **Test** – Select this option to test the generator. This option starts the generator, runs it for approximately 30-60 seconds, and then stops the generator. Use this setting for testing generator wiring and operation. After a successful start/stop sequence test, this selection returns to *OFF*.
- **Enable w/QT** – Select this option to have the AGS monitor temperature (*04 Start Temp F*) and/or the inverter's battery voltage (*05 Start Volts*) to determine when to automatically start the generator—with the Quiet Time parameters enabled.

WARNING: Never allow the generator to start/run in an enclosed garage or any other type of enclosed structure without proper ventilation. Carbon monoxide, an odorless, colorless, deadly gas may accumulate and cause serious injury or death.

7.3.2 Monitoring the AGS using the ME-RC

The following menus are helpful for the proper operation and monitoring of your AGS/generator system. Press the AGS button, and then rotate and press the SELECT knob to access the following menus:

AGS: 02 AGS Status Menu

This menu allows you to view the AGS's current status. There are 14 different status messages to identify the AGS's current state, but only one is displayed at any one time (refer to Figure 7-2).

Available statuses are (refer to Tables 7-3 thru 7-5 for detailed descriptions of each):

- AC In
- Manual Run
- No Comm
- Off
- Quiet Time
- Ready
- Start Temp
- Start Test
- Start VDC
- Fault Gen Run
- Fault Temp
- Fault Test
- Fault VDC
- Lockout

Info: This menu is important when determining if the AGS is working correctly, or for troubleshooting an AGS installation.

Info: For any fault mode displayed in the status menu, please refer to Section 7.8.3 "Resolving Fault Statuses" in this manual.

Note: *AGS menus 03-07 were covered in Section 7.1.*

AGS: 08 AGS TECH Menu

This menu displays meter data on the operating condition of the generator and AGS, and has an AGS mode setting.

- **Gen Run** – Displays the number of hours the generator has been currently running from an autostart condition. This menu does not determine run time when the generator has been manually started.

- **AGS VDC** – Displays battery voltage currently connected to the AGS (Terminals #3 & #4). This voltage is used to power the AGS and is the voltage reading the *AGS: 05 Start Volts* setting is monitoring.

- **Temp** – Displays the current temp reading (##C/##F) of the AGS temp sensor, and is the temperature the *AGS: 04 Start Temp F* setting is monitoring to determine when to start. The following may also display:

TS Open: indicates the temperature sensor is not connected.

TS Hot: indicates a very hot temperature—usually appears because of a short (wires crossed, touching) in the temperature sensor wires.

TS Cold: indicates a very cold temperature—usually appears because there is an opening (not connected, cut) in the temperature sensor wires.

No Comm: there is no AGS connected.

Ext ON/Ext OFF: if an optional ME-PT1 (or ME-PT2) pigtail adapter is connected to the AGS, and the AGS button's *04 Start Temp F* is set to *Ext Input*, this display shows "*Ext ON*" when the ME-PT1 has +12 volts present on its input (or the ME-PT2 is closed); and, shows *Ext OFF* when the ME-PT1 does not have +12 volts on its input (or the ME-PT2 is open).

- **AGS Rev** – Displays the software revision of the connected AGS.

Info: The AGS accessory may display a "*0.0*" revision for several reasons. Either the AGS is not installed, there is no communication because of a bad or miswired network cable, the AGS is not powered, or the AGS is bad.

- **AGS Mode** – Allows you to configure the AGS to comply with RVIA standards[1]. When the AGS is set to "*RV*", it is automatically disabled any time the generator is manually turned on or off. Select *Other* if your system is not for a RV, or your requirements do not need the AGS to be disabled should the generator be manually started/stopped.

Default setting: *AGS Mode = RV*
Settings: *RV, Other*

Info: When the RV mode is used and the AGS system feature is required, the user will need to re-enable the AGS system each time the generator is manually turned on or off.

Info: If the AGS is automatically disabled when using RV mode, the AGS status displays "*Lockout*".

Note[1] *- RV manufacturers use the NFPA 1192 Standard on Recreational Vehicles for installing an AGS system. This standard has a requirement that states when the generator is manually turned on or off, the AGS system must also be turned off. Selecting the "RV" setting satisfies this requirement by automatically disabling the AGS system when it senses that the generator has been manually turned on or off. In installations where the requirement to automatically disable the AGS system is not needed, the "Other" setting can be chosen. When the AGS is in the "Other" mode, manually turning the generator off or on will not automatically disable the AGS system.*

Press the ME-RC's TECH button, and then rotate and press the SELECT knob to access the following menus:

TECH: 01 Temperatures Menu (AGS)

This read-only menu displays the ambient temperature reading of the AGS's temperature sensor (if installed).

Note: *This AGS temperature meter displays the same info as the AGS: 08 AGS TECH menu's Temp meter (see info for this meter on previous page).*

TECH: 02 Revisions Menu (AGS)

This read-only menu displays the firmware revision level of the AGS module that is installed and networked.

7.4 Enabling the AGS using the ME-RC

Before the AGS can begin operating/monitoring for an autostart condition (using the active AGS settings in the ME-RC remote), it must be enabled.

To enable the AGS:

1. Press the AGS button. The *01 AGS Control* menu displays.
2. Press the SELECT knob. The current gen control setting displays with an arrow to the right.
3. Turn the SELECT knob to the *AGS = Enable* setting (or to *Enable w/QT*).
4. Press the SELECT knob again to select this setting. The selection arrow appears to the right of the screen.

The AGS is now ready to automatically start/stop the generator once an autostart condition is satisfied.

Note: *If power is lost to the remote, the AGS control setting returns to the default OFF setting. Once power is restored, you must enable the AGS again.*

Note: *Despite enabling the AGS, you must check the AGS's current status and ensure the status displays as "Ready".*

7.5 Starting/Stopping the Generator using ME-RC

The generator can be manually stopped, as well as autostarted/autostopped using the available settings from your ME-RC.

To autostart/autostop the generator:

In order for the generator to autostart/autostop, one or more of the following autostart/autostop conditions must be pre-set:

Autostart Conditions	Autostop Conditions
• 04 Start Temp F (pages 62-63)	• 03 Run Time Hour (page 62)
• 05 Start Volts (pages 63-64)	• 07 Quiet Time (page 64)

To manually stop the generator (only if autostarted by AGS):

1. Press the AGS button. The *01 AGS Control* menu displays.
2. Press the SELECT knob. The current gen control setting displays with an arrow to the right.
3. Turn the SELECT knob to the *AGS = OFF* setting.
4. Press the SELECT knob again to select this setting. The selection arrow appears to the right of the screen and the display returns to the *01 AGS Control* menu. The generator should stop at this time.

If the generator does not stop as expected, refer to your AGS Owner's Manual.

7.6 AGS Menu Map using the ME-RC

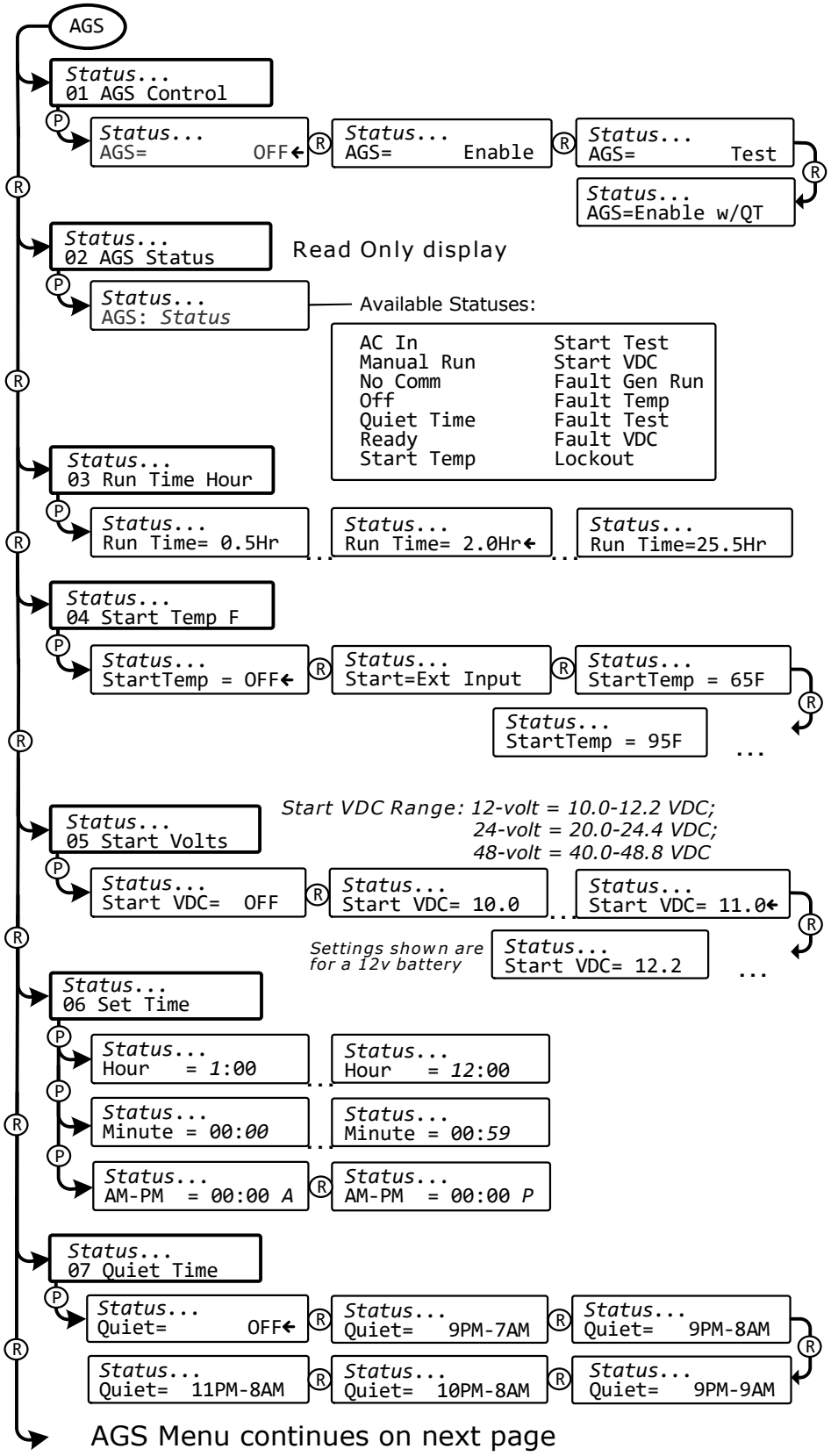

Figure 7-2, AGS Menu Maps in ME-RC Remote (Section 1)

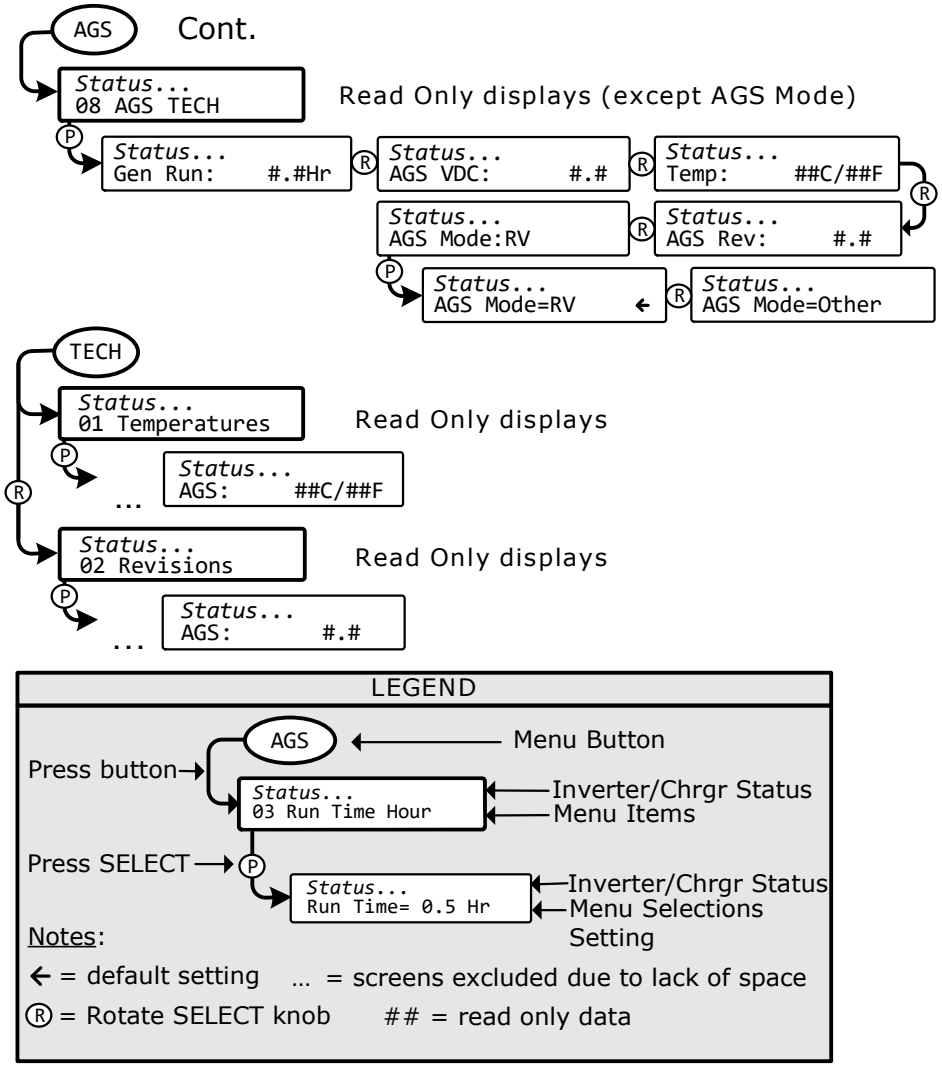

Figure 7-3, AGS Menu Maps in ME-RC Remote (Section 2)

7.7 AGS Remote Status Messages

A status message may be an operational or a fault message. Access the AGS status menu (AGS button's *02 AGS Status* menu) to view the AGS's current operating status. This menu is important when determining if the AGS is working correctly, or for troubleshooting an AGS installation.

7.7.1 AGS Remote Operational Statuses

Refer to Table 7-3 for a brief description of the possible AGS operational statuses that may display.

Table 7-3, AGS Remote Operational Statuses

STATUS	DESCRIPTION
AC In	The inverter/charger is connected to another source such as a grid or an alternate generator, and is not controlled by the AGS. When *AC In* displays, the AGS is prevented or locked out from all autostarting conditions, except for when the generator needs to exercise—if enabled.
Lock-out	Lockout occurs when the AGS system is automatically disabled because the generator has been started or stopped for any condition outside the control of the AGS.
Note: *When a Lockout status occurs, the AGS: 01 AGS Control menu automatically changes from Enable (or Enable w/QT) to OFF. For assistance in clearing or disabling this status, refer to Section 7.8.2.* ***Note:*** *This lockout is a requirement for RV installations—per RVIA. For installations where the requirement to automatically disable the AGS system is not needed, the AGS mode can be changed to "Other". For information, refer to Section 7.8.2 and on the AGS Mode under the AGS: 08 AGS TECH menu on page 74.*	
Manual Run	Generator was started manually from a switch directly connected to the generator, and the *AGS Mode = Other* (if the *AGS Mode=RV*, a Lockout fault displays instead).
Note: *The AGS determines that the gen has been manually turned on if the gen run sense voltage is detected on Terminal #2 of the AGS's 8-port terminal. However, if the Gen Type DIP switch is set to "2-Wire Standby"—which does not require the gen run sense voltage—manually turning the gen on displays "AC In" rather than "Manual Run".*	
No Comm	The AGS is not communicating with the inverter/remote. This is a normal status if there is no AGS (Network version) connected in the system. If an AGS is installed, then refer to Section 7.8.2 "Resolving Operational Statuses".
Off	The *AGS: 01 AGS Control* menu is set to *OFF*. This setting will not allow the AGS to autostart the generator.
Quiet Time	The ME-AGS-N has entered Quiet Time per the *AGS: 07 Quiet Time* setting.
Note: *The generator will not autostart during Quiet Time*.	
Ready	The *AGS: 01 AGS Control* menu is set to *Enable* or *Enable w/ QT*, and the AGS is ready to automatically start the generator based on the AGS button's active autostart settings.

7.7.2 AGS Remote Start Statuses

The following "Start" statuses identify the condition that autostarted the generator. If you determine that the autostart condition occurred sooner than expected (or didn't want this autostart condition), refer to the Setup section for that condition to change (or defeat) the autostart setting.

Table 7-4, AGS Remote Start Statuses

STATUS	DESCRIPTION
Start Temp	The generator has started based on the *AGS: 04 Start Temp F* setting.
Start Test	The AGS is in Test mode. Test mode may be started from the red TEST button located on the AGS or by selecting "*Test"* from the *AGS: 01 AGS Control* menu (refer to your AGS Owner's Manual for further information).
Start VDC	The generator has started based on the *AGS: 05 Start Volts* setting.

7.7.3 AGS Remote Fault Statuses

The following "Fault" statuses indicate that the generator wasn't able to start based on an expected autostart condition. Refer to Section 7.8.3 "Resolving Fault Statuses" for help in diagnosing the problem.

Table 7-5, AGS Remote Fault Statuses

STATUS	DESCRIPTION
Fault Gen Run	The generator stopped before the autostop condition was satisfied.
Fault Temp	The generator failed the autostart cycle in Start Temp mode.
Fault Test	The generator failed the autostart cycle in Test mode.
Fault VDC	The generator failed the autostart cycle in Start VDC mode.

7.7.4 General AGS Operational Notes

- If a fault condition occurs, select the *OFF* setting from the *01 AGS Control* menu, and then select *Enable* or *Test*. If the problem persists, refer to your AGS Owner's Manual.
- When AGS control is set to *Enabled* and an autostart condition occurs, it attempts an automatic generator start. This is done by closing its internal relays (based on the Gen Type selection) to control the starter—much like a person does when manually starting the generator. The starter is turned on for short periods of time and then turned off. If the AGS determines that the engine has started while cranking (STATUS indicator lights solid green), the starter is turned off after a short delay. If the engine does not start, another attempt is made to turn on the starter after a long delay period. This is repeated until the generator starts or until all its start attempts are reached, which causes the AGS to go into a fault condition (indicated by a blinking FAULT indication on the remote and a solid red STATUS indicator on the AGS Module).

- When the gen control setting in the remote is in the *OFF* position, all generator autostart functions are disabled and the AGS module's STATUS indicator will also be off.
- If using the temperature autostart feature in an RV coach, set the air conditioner thermostat slightly less than the setting (*04 Start Temp F* menu). If using two air conditioners, set the second air conditioner thermostat 2° to 5° higher than the first air conditioner. This staggered setting will allow the first air conditioner to start and run in an effort to keep the coach cool. If the temperature continues to rise inside the coach, the second air conditioner will turn on to further cool the coach.
- When the generator starts successfully, the STATUS indicator on the AGS module will turn solid green. The generator will run until an autostop condition is reached or until it is manually turned off; at which time a stop signal will be sent to the generator.
- If the generator is running when the AGS module's TEST button is pressed (or the *Test* setting is selected from the *01 AGS Control* menu), the generator will stop and then start again. The generator will then run for approximately 30-60 seconds before shutting off.
- When using a ME-RC remote, there is a two-minute delay before the AGS attempts to start the generator if the voltage to the AGS module falls to the *05 Start Volts* setting. There is no delay if the AGS attempts to start the generator when the temperature around the remote AGS temp sensor rises to the *04 Start Temp F* setting.
- Several autostart/autostop settings can be active at once. However, once an autostart condition becomes active, all other autostart conditions are ignored until the specific condition that caused the generator to start is satisfied by its autostop condition. Once the generator has completed this autostart/autostop cycle, the AGS immediately begins to monitor for any active autostart/autostop settings again.

7.8 Troubleshooting the AGS with the ME-RC

This section assists you in using your ME-RC to identify a fault, and to resolve an abnormal operational condition detected within your AGS system.

7.8.1 AGS Fault Message Screens for the ME-RC Remote

When an AGS fault is detected, the remote's FAULT LED comes on (blinks), and the AGS fault status is displayed on the top line of the LCD screen (alternates with the inverter/charger status). Figure 7-4 is an example of how fault messages appear on the ME-RC remote. Use the remote's LCD screen and the information in this section to identify and correct the issue.

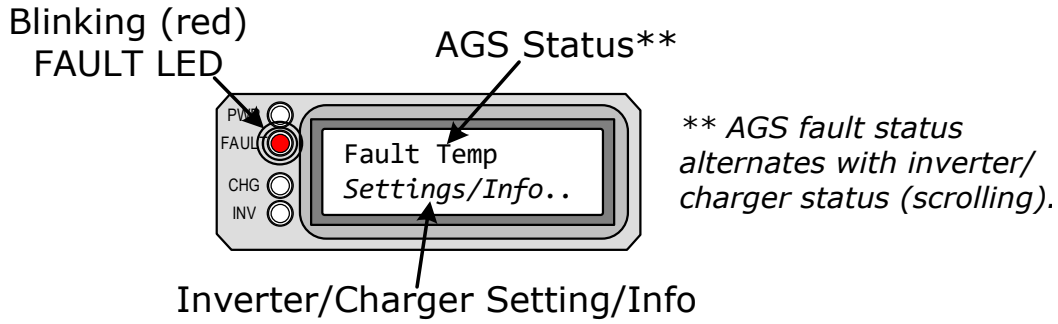

Figure 7-4, Example: AGS Fault Message on ME-RC Remote

7.8.2 Resolving Operational Statuses

The following operational statuses can display on your remote control, and some may indicate an abnormal condition. Use the info below to resolve.

- **No Comm** – This is a normal status if there is no AGS installed. If an AGS is installed, use the information below to determine the remedy.

Remedy: If an AGS is installed, then follow these steps:

1. Ensure the green READY indicator on the AGS module is on (blinking or solid) to indicate the AGS is getting power.
2. Ensure the communications cable is connected from the inverter's Network port to the AGS's NETWORK port.
3. Ensure you have the correct communications cable.

- **AC In** – A normal status when the input to the inverter/charger is connected to an AC source such as utility/grid power, or to an alternate generator that may not be controlled by the AGS.

Remedy: The *AC In* status prevents the AGS from autostarting. To enable the AGS to autostart the generator, remove any AC power connected to the input of the inverter/charger.

- **Lockout** – This status indicates the AGS has been configured to comply with RVIA requirements (for use in an RV). *Lockout* displays whenever the generator is started/stopped for any condition outside the control of the AGS. To clear or disable this status, refer to the remedies below.

Remedy: To clear a *Lockout* status: Go to the *AGS: 01 AGS Control* menu (the current setting should be *AGS = OFF*), then press the SELECT knob to re-enter the "*OFF*" selection. Once you re-select the *OFF* setting, the *Lockout* status clears (now should read "*OFF*"). You must re-enable the AGS for autostart operation by changing the AGS control from *AGS = OFF* to *AGS = Enable*, or *AGS = Enable w/ QT* (under the *AGS: 01 AGS Control* menu).

Remedy: To disable the *Lockout* feature: If the AGS is not used in an RV installation (or you do not need to comply with RVIA requirements), you can disable the Lockout feature. Under the *AGS: 08 AGS TECH* menu, access the *AGS Mode* setting and change it from *RV* to *Other* (*AGS Mode = Other*).

7.8.3 Resolving Fault Statuses

For these faults, refer to the remedy that follows.

- **Fault Temp** – The generator failed to autostart and run per the *04 Start Temp F* menu's start parameters.
- **Fault Test** – The generator failed to start and run after pressing the red TEST pushbutton on the AGS module.
- **Fault VDC** – The generator failed to autostart and run per the *05 Start Volts* menu's start parameters.

Remedy: Fault message may display on the remote control if: A. The AGS attempts to start the generator four times, but the gen failed to start and run per the specific autostart parameters; or, B. The generator started, but did not provide the correct gen run sense signal to the AGS module. For either scenario, refer to the AGS Owner's Manual to troubleshoot.

- **Fault Gen Run** – The generator successfully started and ran for more than two minutes, but the generator unexpectedly stopped by itself before the active AGS autostop condition was finished.

Info: The AGS module determines the generator is running by monitoring the gen run sense voltage/signal. When this gen run sense voltage/signal is no longer available, the AGS thinks the gen is off or has stopped.

Info: Gen run fault detection is not active if the generator is manually started.

Remedy:

A. If the generator is still running: Confirm you are getting the correct gen run sense signal to the AGS module. For further assistance, refer to your AGS Owner's Manual.

B. If the generator is not running: Check the generator for fault codes and adequate fuel. If neither is an issue, check the generator's owner's manual for troubleshooting tips to determine why it may have shut down on its own.

7.8.4 How to Clear AGS Faults

Go to the *AGS: 01 AGS Control* menu and select *AGS= OFF*.

Note: *After the fault clears and the reason for the fault is determined, be sure to re-enable the AGS to autostart. Go to the AGS: 01 AGS Control menu and select AGS= Enable or AGS= Enable w/QT.*

Once the fault is cleared and the reason for the fault is determined, you should re-enable the AGS to see if the fault returns, or test the AGS/ generator system by performing the AGS Functional Test for your remote (see your AGS Owner's Manual).

8.0 Using a BMK

This section discusses how to set up and monitor Magnum's BMK (Battery Monitor Kit) using the menu options in the ME-RC remote.

8.1 Setting Up the BMK using the ME-RC

Use the BMK SETUP menus to establish your battery's charge efficiency and to set the capacity of the battery bank (AH size). Use the ME-RC remote's METER button to access the Charge Efficiency menu (see Figure 8-1 below).

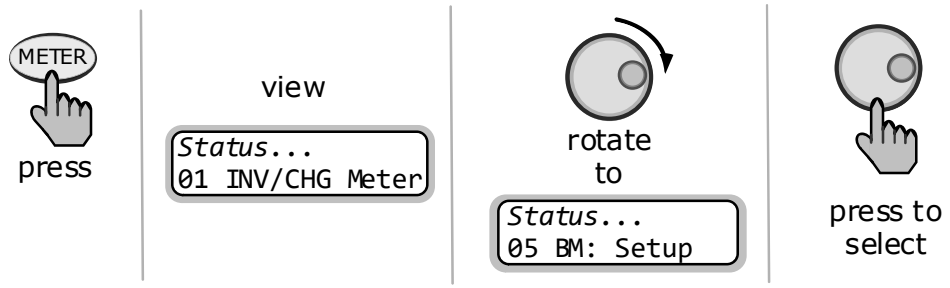

Figure 8-1, Accessing the BM Setup Menu

8.1.1 Charge Efficiency Setting

What is charge efficiency? When a certain amount of energy is removed or discharged from the battery, this removed energy will need to be returned to keep the batteries at a 100% state of charge. As batteries are being charged, they lose energy; either in the form of heat, or while gassing. This loss of energy while charging means the battery will not be fully charged if you only return the current that was removed. To compensate for the battery's inefficiencies while charging, a charge efficiency setting is provided. The charge efficiency setting compensates the *AH I/O* (Amp-Hrs In/Out) reading by ensuring the AH returned to the battery are greater than the AH removed.

Example: The *AH I/O* display reads "*000"* and you begin powering a 25-amp load for two hours—the display will show *-050*. This indicates that you have discharged 50 AH (2 x 25) from the battery. If the charge efficiency setting is set to *95%*, then as you begin charging and return 50 AH, the AH I/O reading will be less than zero, indicating that the AH removed have not been fully returned. The 95% charge efficiency setting requires 52.5 AH (50/95) to be returned before the AH I/O returns to 0.

8.1.1.1 Accessing the Charge Efficiency Setting

Normally, the ME-BMK battery monitor automatically calculates the battery's efficiency. To change from the *Auto* default setting, press the ME-RC remote's METER button. After pressing the METER button, the *01 INV/CHG Meter* menu should appear; from this menu, rotate the SELECT knob to the *05 BM: Setup menu* to access and adjust the *Charge Eff* menu (see Figures 8-1 and 8-2).

- **Charge Eff** – This setting allows the battery monitor to calculate the battery's charge efficiency. The charge efficiency can be calculated automatically using the *Auto* setting, or can be calculated based on a fixed efficiency value that either you have determined, or were recommended to use.

Default setting: *Auto*
Range: *Auto, 50%-99%*

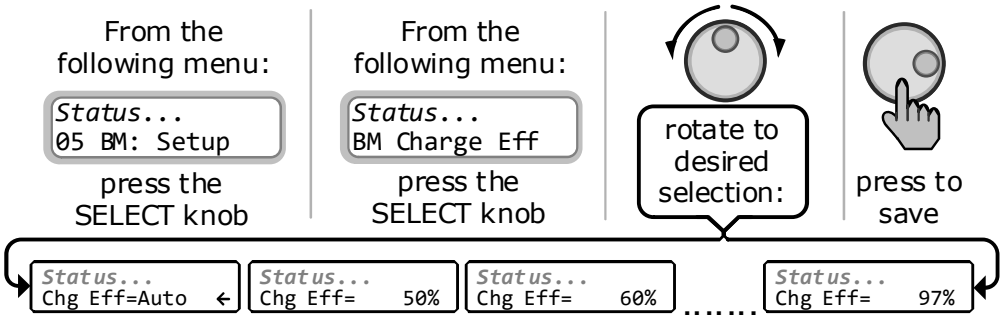

Figure 8-2, Changing the Charge Efficiency Setting

8.1.1.2 Changing the Charge Efficiency Setting

The factory default charge efficiency setting is *Auto*. This setting allows the battery monitor to automatically calculate variables that affect the charging efficiency, such as battery type, battery age, and how the batteries are maintained—which is not always constant. With the *Auto* setting, the efficiency is automatically recalculated each time the batteries reach a 100% state of charge (SOC).

The charge efficiency setting can also be set to a fixed value from 50% to 99% if the battery's charge efficiency is known. With a setting other than *Auto*, the battery monitor uses the fixed setting to calculate the *AH I/O* display, under the *03 BM: Meters* menu. For example, if you set the charge efficiency to 90% and 100 AH are removed from the battery, the *AH I/O* display would read *000* only after 111 AH have been returned to the battery.

CAUTION: The factory default charge efficiency setting is *Auto*, which allows the charging efficiency to be automatically calculated. In most circumstances, this setting determines the best charge efficiency. If you do not know your battery's charging efficiency, leave it at the factory default setting (Auto). If the setting is adjusted to a fixed value, but this value is not correct, the state-of-charge information will become more inaccurate with every charge.

To access the *AH I/O* display: Press the METER button, then turn the SELECT knob until the *03 BM: Meters* menu appears, press the SELECT knob again, and then turn the SELECT knob to the *AH I/O* display.

After several charge/discharge cycles (below 80% SOC), the *AH I/O* reading should be slightly positive when the *02 BM: SOC Batt SOC* display reads *99%*.

To view the *Batt SOC* display: Press the METER button, then turn the SELECT knob until the *02 BM: SOC* menu appears. If the *AH I/O* reading is below 000 (negative#) when the *Batt SOC* display reads *99%*, then increase the charge efficiency setting. If you find that the *AH I/O* reading is substantially above zero when *Batt SOC* reads *99%*, then decrease the charge efficiency setting.

8.1.2 Batt AmpHrs Setting

8.1.2.1 Accessing and Setting the Batt AmpHrs Setting

Press the METER button on the ME-RC, and then rotate the SELECT knob until the display shows the *05 BM: Setup* menu. When the *05 BM: Setup* menu appears, press the SELECT knob to display the *BM Charge Eff* menu item. Turn the SELECT knob until the *BM Amp Hours* menu appears. Press the SELECT knob to display the current *Batt Amphr* setting. Turn the SELECT knob to adjust the *Batt AmpHr* setting. Press the SELECT knob to select and save the new setting (see Figure 8-3 below).

CAUTION: It is important that the METER button's *05 BM: Setup* menu's *Batt Amphrs* setting is correct or else the calculations used to determine the *02 BM: SOC* display will be inaccurate.

- **AmpHour Size** – This setting is used by the battery monitor to calculate the battery's SOC. The AH size represents the amount of energy the battery can deliver.

Default setting: *400 AH*
Range: *200-2500 AH*

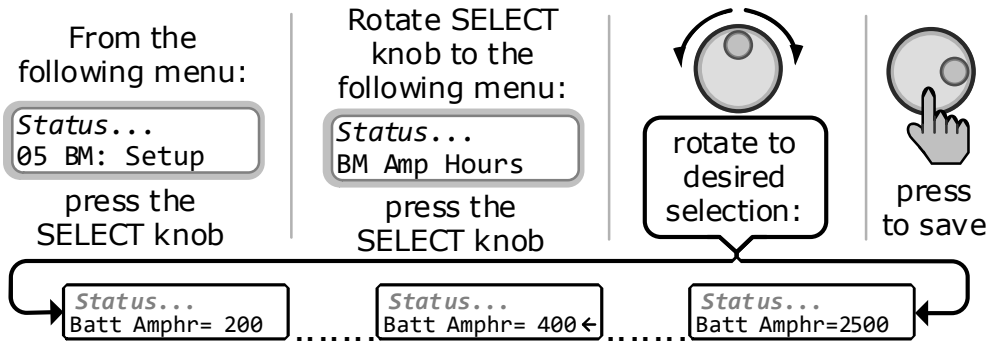

Figure 8-3, Adjusting the AmpHour Size

Where do I set the AmpHour Size setting? Select a setting based on the 20-hr AmpHour capacity of the battery bank.

How do I determine my Battery Amp-Hour capacity? Refer to the battery manufacturer to obtain the 20-hr amp-hour capacity of your particular batteries. Use this capacity and the total amount of batteries to determine the AmpHour capacity of the inverter battery bank.

Info: For batteries in parallel strings – add the AHr capacity of each string (Ex.: three 250 AH batteries in parallel = 750 AH).

For batteries in a series string – use the amp-hour capacity of one battery (Ex.: three 250 AH batteries in series = 250 AH).

Info: The batteries should be a deep-cycle type and rated either by AH or reserve capacity in minutes.

- Amp-hour (AH) capacity is a measurement of how many amps a battery can deliver for a specified length of time (usually 20 hours) until the voltage achieves 1.75 VDC/cell at 80°F/27°C.
- Reserve Capacity (RC) is a measure of how many minutes a battery can deliver a certain amount of current (usually 25A) and maintain a voltage above 1.75 VDC/cell at 80°F/27°C. If using the Reserve Capacity (25A), the 20-hour AH capacity can be estimated by multiplying 'minutes reserve capacity' by 50%.

8.2 ME-RC50 Remote's BMK METER Menu Maps

The diagram below is a complete overview of the battery monitor settings and information displays available from the ME-RC50 remote's METER menu.

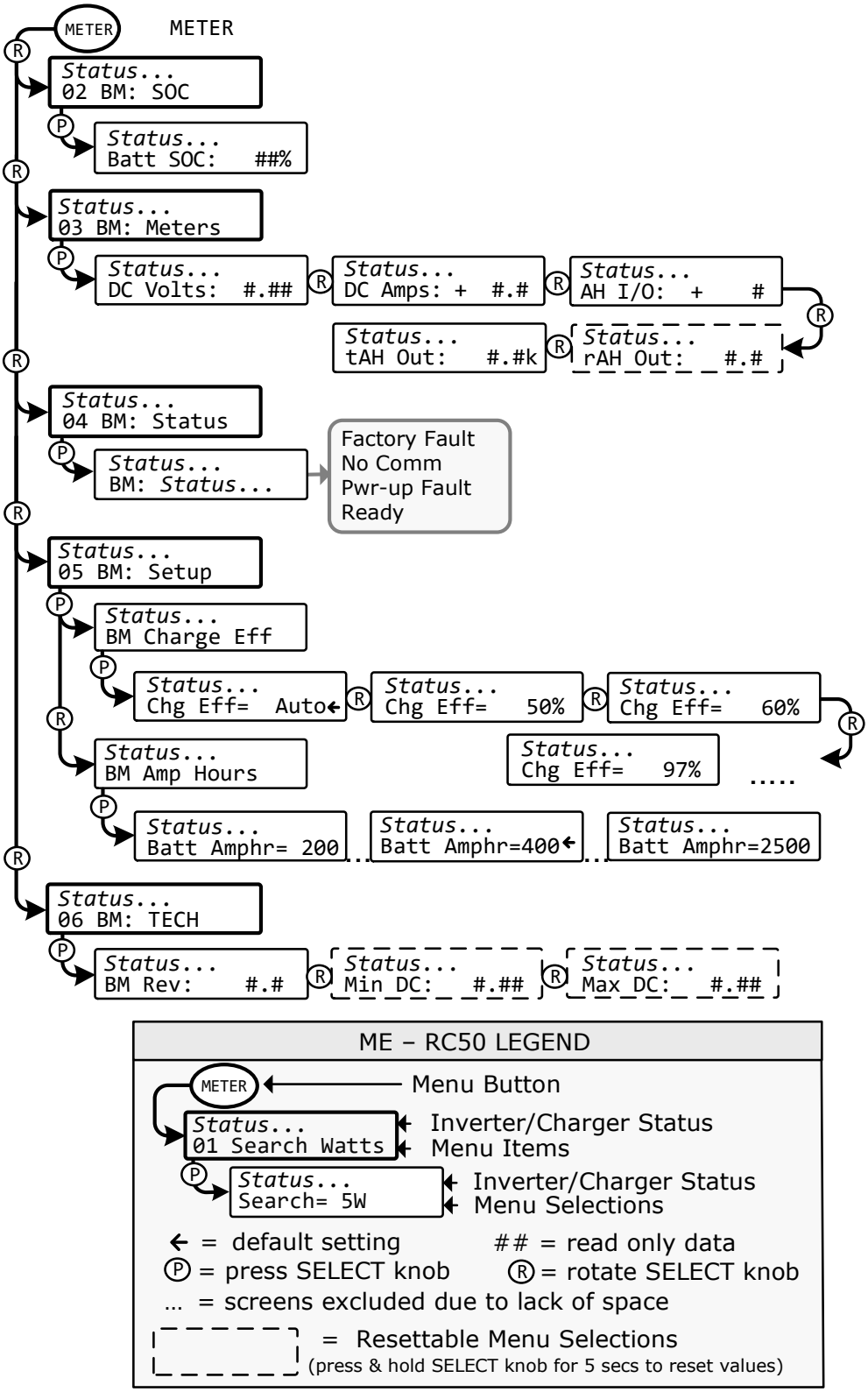

Figure 8-4, ME-RC50 METER Menu Map (Displays w/BMK Settings)

8.3 Operating the BMK using the ME-RC

This section explains how the BMK battery monitor works, and how to use the ME-RC50 remote control to obtain battery bank information. It also covers the various LCD displays that are related to the battery monitor and the status of the Sense Module's LED indicator.

8.3.1 How the Battery Monitor (ME-BMK) Operates

The ME-BMK battery monitor uses a precision resistor known as a shunt to measure current flow into and out of the battery. The shunt provides a small voltage to the Sense Module that is proportional to the current flow. When current starts flowing into or out of the battery, the Sense Module measures the current flow and determines the amount of current removed from and returned to the battery. The amount of current (or AHrs) removed or returned is displayed on the remote control as the *AH I/O* (AHrs In/Out). The AH I/O number is compensated by a charging efficiency value that accounts for energy loses while charging, and is one of the factors used to determine the battery's State Of Charge (SOC).

The battery's state of charge—which is the best indicator of the condition of the batteries—is indicated on the *Batt SOC* display. This display will show that the batteries are fully charged (i.e., *Batt SOC = 100%*) once the following three conditions have been met:

1. The charging voltage has stabilized over a period of time.
2. The charging current has decreased to a low percentage of the amp-hour capacity—normally less than 2%.
3. The AHrs that were removed from the battery are within 1% of fully being returned.

After the batteries have reached 100% SOC and have discharged ≥0.5% of the battery capacity setting, the charge efficiency value will be recalculated and the AH I/O read-out will reset to the recalculated value.

Info: Charging from a generator (non-inverter topology) adds some concern about the cost of fuel. A balance should be considered between the use of fuel and the need to charge your batteries to 100% SOC—to maintain the full service life of a battery. Batteries discharged to 50% SOC and then normally recharged to 85-90% SOC would be an efficient compromise between fuel cost and battery life. Trying to restore the last 10-15% of a full battery charge requires a long time—typically several hours.

8.4 ME-RC METER Menu Items and Settings for BMK

Press the METER button on the ME-RC to access the different meters that determine the status of the inverter/charger and battery system.

01 INV/CHG Meter – This menu provides the DC voltage and current of the inverter/charger when inverting or charging. These are **not** BMK readings.

02 BM: SOC – This display is the best way to monitor the actual state of the battery. The read only display shows the State Of Charge (SOC) for the connected battery bank. The SOC represents the condition of the battery as a percentage of the available capacity left in the battery. The range is 0% to 100%, where 100% represents a fully charged battery and 0% means the battery is completely discharged.

When the Sense Module is first connected, the batteries will need to be fully charged (i.e., *Batt SOC = 100%*) at least once to establish a SOC reference point. While this reference point is being calculated, the display will show "*Think'n*", to indicate that the SOC reference point is being calculated. After the batteries are fully charged, the display will change from *Think'n* to *100%* and begin to provide accurate SOC percentage values.

Info: *Think'n* can take up to several days depending on the charge source and its ability to completely recharge the batteries (e.g., a small PV array may not be large enough to replace all the AHrs in a reasonable amount of time).

If the Sense Module is disconnected from power, this display resets to *Think'n* and the batteries will require another full charge before this display begins providing SOC percentage information.

Info: If using lead-acid type batteries, try to limit battery discharging to 50% of capacity (keep battery above 50% SOC). If batteries are allowed to be continually discharged below 50% SOC, their effective service life will be considerably shorter. This 50% rule has been determined to be the best compromise between available energy and the maximum number of discharge cycles a battery can provide.

03 BM: Meters – This menu shows the battery bank's DC voltage, DC current, and AH information that has been provided by the battery meter. The values for these meter displays are updated each second.

- **DC Volts** – Displays the real-time battery voltage from 7.00 to 70.00 volts (± 0.02 volts).
- **DC Amps** – Displays the real-time charge current (amps into the battery) or discharge current (amps out of the battery). Charging is shown as a positive (+) number and discharging is shown as a negative (-) number. The range is from ±0.1 to 999 amps, with a 1.0% accuracy.
- **AH I/O** (**Amp-Hours In/Out**) – Displays the AHrs returned to/removed from the battery. When the value is positive, it represents AHrs returned to the battery during any subsequent charging. A negative value represents AHrs removed from a full battery. The range is ±32,768 AH.

When using the charge efficiency's *Auto* setting, the AH I/O value is recalculated after the battery has been fully charged (i.e., 100% SOC) and ≥0.5% of the battery capacity has been discharged. If the Sense Module is disconnected from power, the *AH I/O* value resets to zero.

Info: The *AH I/O* display correlates with the battery's *Batt Amphr* setting to help determine the *02 BM: SOC* display.

Info: AH I/O example: if you run a 10-amp load for three hours, the display will show *-30 AH*. When you begin charging, the display will count from *-30 AH* back toward *0 AH*.

- **rAH Out (Resettable AHrs Removed)** – This meter displays the total AHrs removed from the battery since it was last reset. This display can be used as a battery load indicator to help identify and monitor the battery load consumption. The range is 0 to 65,535.0 AHrs (0.1 amp-hour resolution).

To reset the AHrs value to zero, press and hold the rotary SELECT knob for >5 seconds when this display is shown. After this display has been reset, it will begin calculating and displaying new rAH Out values. This display automatically resets to zero if the Sense Module is disconnected from power.

- **tAH Out** (**Total AHrs Removed**) – This meter displays the total AHrs removed from the battery since the Sense Module was first connected. This display can be used as a battery service life indicator. The value is displayed in 0.1k [or 100 AHrs ("k" equals 1000)] resolution up to a maximum of 6,553.5k AHrs (6,553,500 AHrs). The displayed number resets to 0.0k when the Sense Module is disconnected from power.

04 BM: Status – This menu selection offers read only displays that give the current operating status of the battery monitor. This selection also provides information to determine if there is a power-up fault condition.

- **BM: Factory Fault** – The BMK has lost its calibration setpoints that were established at the factory.
- **BM: No Comm** – The battery monitor is not communicating with the remote. This typically means a ME-BMK is not installed in the system. If installed, view the Sense Module LED and refer to your BMK owner's manual to help determine the issue.
- **BM: Pwr-up Fault** – The battery monitor faulted when it was powered-up. The fault occurred because the power-up self-test failed. Refer to your BMK owner's manual.
- **BM: Ready** – The battery monitor is connected and actively monitoring the battery system.

05 BM: Setup – This menu allows the battery's charging efficiency to be automatically calculated or manually selected, and the battery's amp-hours to be set. Refer to Section 8.1.1 for more information on the *Charge Efficiency* setting, and to Section 8.1.2 for the *Batt AmpHr* setting.

06 BM: TECH – These menu selections allow you to access the system information used to assist service technicians in troubleshooting the battery monitor or the charging system.

- **BM Rev** – This read only menu displays the firmware revision level of the connected battery monitor. If the battery monitor is not connected or not communicating, the display will show "*0.0*".

Min DC – This menu displays the lowest battery voltage since the last reset. The voltage shown on the display is averaged each second, and is helpful when troubleshooting or detecting an over-discharge condition.

To reset this display, press and hold the rotary SELECT knob (~45-60 seconds) while the *Min DC* display is shown. After this value has been reset, the display will begin monitoring and showing new minimum DC input values. If the battery monitor is not connected or not communicating, the display will show "*0.0*".

Max DC – This menu displays the highest battery voltage since the last reset. The voltage shown on the display is averaged each second, and this allows you to check your charging system (battery charger, charge controller, etc.,) to ensure the charging voltage has been attained. This display is also helpful when troubleshooting or detecting if an over-charge condition has occurred.

To reset this display, press and hold the rotary SELECT knob (~45-60 seconds) while the *Max DC* display is shown. After this value has been reset, the display will begin monitoring and showing new maximum DC input values. If the battery monitor is not connected or not communicating, the display will show "*0.0*".

MAGNUM ENERGY

DMX POWER

64-0003 K Owner’s Manual, ME-RC