DIMENSIONS™

N Series 1800-3000W

Pure Sine Wave Inverter

Owner's Manual

DMX POWER

Disclaimer of Liability

The use of this manual and the conditions or methods of installation, operation, use, and maintenance of the L-Case N Series inverter is beyond the control of DMX Power. Therefore, this company assumes no responsibility and expressly disclaims any liability for loss, damage, or expense whether direct, indirect, consequential, or incidental that may arise out of or be in anyway connected with such installation, operation, use, or maintenance.

Due to continuous improvements and product updates, the images shown in this manual may not exactly match the unit purchased.

Restrictions on Use

The L-Case N Series inverter may only be used in life support devices and systems with the express written approval of DMX Power. Failure of this inverter can reasonably be expected to cause failure of that life support device or system, or to affect the safety or effectiveness of that device or system. If the L-Case N Series inverter fails, it is reasonable to assume the health of the user or other persons may be endangered.

Copyright Notice

Copyright © 2026 by DMX Power LLC. All rights reserved. Permission to copy, distribute, and/or modify this document is prohibited without express written permission from DMX Power.

Document Information

Description – L-Case N Series inverter Owner's Manual
Part Number and Revision – 122234 Rev A
Date Published – January 2026

The entire manual is available for download—with many of the diagrams available in color—from our website at: www.dmx-power.com

Contact Information

DMX Power
Phone: 800-553-6418 or 651-653-7000
Technical Questions: support@dmx-power.com
Warranty or RMA: warranty@dmx-power.com
Web: www.dmx-power.com

Statement of Appreciation

Thank you from all of us at DMX Power for purchasing this L-Case N Series inverter. At DMX Power, we are committed to providing you with quality products and services, and hope that your experience with us is pleasant and professional.

Record the inverter model and serial number in case you need to provide this information in the future.	
Model:	**Serial Number:**
12/1800N	
12/2400N	
12/2400DN	
12/3000N	
12/3000DN	
12/3600NPL	

IMPORTANT SAFETY INSTRUCTIONS
SAVE THESE INSTRUCTIONS

THIS MANUAL CONTAINS IMPORTANT INSTRUCTIONS FOR THE L-CASE N SERIES INVERTER THAT SHALL BE FOLLOWED DURING THE INSTALLATION AND OPERATION OF THIS PRODUCT. Before using the L-Case N Series inverter, read all instructions and cautionary markings. Always be sure to review the individual manuals provided for each component of the system. The installation instructions are for use by qualified personnel only. Do not perform any installation or servicing other than that specified in this owner's manual unless you are qualified to do so. Incorrect installation or servicing may result in a risk of electric shock, fire, or other safety hazard.

Safety Symbols

The following safety symbols have been placed throughout this manual to indicate dangerous and important safety instructions.

DANGER

Indicates a hazardous situation which, if not avoided, will result in death or serious injury.

WARNING

Indicates a hazardous situation which, if not avoided, could result in death or serious injury.

CAUTION

Indicates a hazardous situation which, if not avoided, could result in minor or moderate injury. This symbol may also be used to indicate equipment damage can result.

NOTICE

Draws the reader's attention to important or unusual information not directly related to safety.

Safety Precautions

- All electrical work must be performed in accordance with local and national electrical codes.
- There are no user serviceable parts inside the product. Do not remove the cover.
- This product should not be exposed to rain, moisture, or liquids of any type.
- Do not install the product in a **zero clearance closure.**
- Listed or labeled equipment shall be installed and used in accordance with any instructions included in the listing or labeling.
- Power inverters contain a circuit breaker and a capacitor that may produce a spark upon connection or during normal operation.
- Always verify proper wiring prior to starting the inverter.

⚠WARNING

- Power inverters produce harzardous voltages. To avoid risk of harm or fire, the unit must be properly installed.
- Do not mount in a confined battery or gas compartment.
- Live power may be present at more than one point since an inverter utilizes both DC (batteries) and AC (generator) power. To reduce risk of personal injury and/or damage to the inverter, ensure all DC and AC wiring is disconnected prior to installing or performing maintenance on the inverter. Turning off the inverter will not reduce this risk, the inverter must be totally disconnected from all sources.
- Working near lead-acid batteries is dangerous. There is a risk of acid exposure.

⚠CAUTION

- Use insulated tools to reduce the chance of electrical shock or accidental short circuits.
- Damage to the power inverter will occur if correct polarity is not observed when installing the inverter's DC input cables
- Damage to the power inverter will occur if an external AC power source is applied to the inverter's AC hardwire output.
- Overcurrent protection for the battery supply is not provided as an integral part of this inverter. Overcurrent protection of the battery cables must be provided as part of the system installation.
- The AC output should be protected by a branch rated breaker external to the inverter if required to comply with the National Electric Code, NFPA 70, or the Canadian Electrical Code, C22.1.

Battery Safety

- Batteries are sensitive to changes in temperature. Never charge a frozen battery.
- Provide at least one inch (2.5 cm) of air spave between batteries to provide optimum cooling.
- Install batteries in a stable environment. Installation area should be a clean, dry, ventilated environment where batteries are protected from high and low temperatures. The location must be fully accessible and protected from exposure to heat producing devices, and away from any fuel tanks.

⚠DANGER

- Use extreme care and insulated tools working around batteries. If short-circuited, a battery can produce extremely high currents (e.g., dropping a metal tool across the battery terminal), which could cause shock, fire, or explosion.

⚠WARNING

- Read and follow the battery manufacturer's safety precautions before installing the inverter and batteries. Always verify proper polarity and voltage before connecting the batteries to the inverter. Once the batteries are connected to the inverter, ensure the maintenance requirements provided by the battery manufacturer are followed to extend the life of the batteries and to prevent damage to the batteries.

⚠WARNING

- Batteries generate explosive gases during operation, ensure adequate ventilation. For compartment or enclosure installations, always vent batteries from the highest point to the outside. Design the battery enclosure to prevent accumulation and concentration of hydrogen gas in "pockets" at the top of the compartment. Provide at least one inch of air space between batteries to provide optimum cooling. Batteries generate explosive gases during operation
- To prevent a spark at the battery and reduce the chance of explosion, always connect the cables to the batteries first. Then connect the cables to the inverter.
- Never smoke or allow a spark near batteries.
- A fuse must be installed between the battery and the inverter to protect against shorted cables.

⚠CAUTION

- Always wear eye protection, such as safety glasses, and gloves when working with batteries. Avoid touching your eyes and face to keep any fluid or corrosion on the battery from coming in contact with eyes and skin. Prior to beginning work ensure fresh water and soap are available nearby. In case of battery acid contact with skin or clothing, thoroughly wash. In case of battery acid contact with eyes, flood eyes for at least 15 minutes with running water and seek immediate medical attention. Baking soda neutralizes lead acid battery electrolyte and vinegar neutralizes spilled NiCad and NiFe battery electrolyte; depending on your battery type, keep a supply on hand near the batteries.
- Remove all jewelry such as rings, watches, bracelets, etc., when installing or performing maintenance on the batteries or inverter. A battery can produce a short-circuit current high enough to weld metal jewelry, causing severe burns.Dispose of the batteries according to local regulation.
- Never work alone, always have someone within the range of your voice or close enough to come to your aid when working around batteries.
- Never use old or untested batteries. Check each battery's label for age, type, and date code before use to ensure all batteries are identical.

NOTICE

- Once the batteries are connected to the inverter, ensure the maintenance (i.e., yearly inspections for cracks, leaks and swelling) provided by the battery manufacturer is followed to extend the life of the batteries and to prevent damage to the batteries.
- Never charge a frozen battery.

Table of Contents

1.0 Introduction 1
1.1 How an Inverter Works 2
1.2 Advantages of a Pure Sine Wave vs a Modified Sine Wave Inverter 2
1.3 Features and Benefits 2
2.0 Installation 5
2.1 Pre-Installation 5
2.1.1 Unpacking and Inspection 5
2.1.2 Required Components and Materials 6
2.1.3 Locating the Inverter 6
2.1.4 Mounting the Inverter 7
2.1.5 Wiring the Inverter 9
2.1.6 Protecting Wire 9
2.1.7 Wiring Requirement 9
2.1.8 Wire Routing 9
2.1.9 Torque Requirements 9
2.2 DC Wiring 10
2.2.1 DC Wiring Size 11
2.2.2 DC Overcurrent Protection 11
2.2.3 DC Cable Connections 12
2.2.4 Typical Cable Connection Procedure 14
2.2.5 Wiring the Battery Bank 14
2.2.6 Wiring the Inverter to the Battery Bank 15
2.3 AC Wiring 17
2.3.1 Pre AC Wiring Requirements 17
2.3.2 AC Wire Size and Overcurrent Protection 17
2.3.3 Recommended Ground Fault Circuit Interruption (GFCI) Breakers 18
2.3.4 AC Output Wiring Connections 18
2.3.5 Wiring the AC Output 18
2.4 Grounding Inverters 19
2.5 Remove Inverter “On/Off” Switch 19
2.6 Final Inspection 20
2.7 Functional Test 20
3.0 Operation 21
3.1 Inverter Power Mode 21
3.2 Protection Circuitry Operation 21
3.3 Inverter Fan Operation 22
4.0 Maintenance and Troubleshooting 23
4.1 Recommended Inverter and Battery Care 23
4.2 Storage for Mobile Installations 23
4.3 Troubleshooting 24
4.4 Resetting the Inverter 25
4.4.1 Performing an Inverter Reset 25

Table of Contents (Cont.)

Appendix A – Specifications and Optional Equipment 26
A-1 Inverter Specifications 26
Appendix B – Battery Information 27
B-1 Battery Location 27
B-2 Battery Types 27
B-3 Battery Temperature 27
B-4 Battery Bank Sizing 28
B-5 Battery Bank Sizing Worksheet 28
B-6 Battery Wiring Configurations 29
B-6.1 Series Wiring 29
B-6.2 Parallel Wiring 30
B-6.3 Series-Parallel Wiring 30
Appendix C – Power Consumption & Output Waveforms 32
C-1 Appliances and Run Time 32
C-2 Output Waveform 32
Appendix D – Inverter/Charger Terminology 34

List of Figures

Figure 1-1, Power Switch, Status LED, and Accessory Connection Ports 3
Figure 1-2, Electrical Connection Points 4
Figure 1-3, Right Side Features 4
Figure 2-1, Approved Mounting Positions 8
Figure 2-2, L-Case N Series Case Dimensions 8
Figure 2-3, Typical DC Cable Connections 13
Figure 2-4, Typical Wiring Diagram 13
Figure 4-1, Performing an Inverter Reset 25
Figure B-1, Series Battery Wiring 29
Figure B-2, Parallel Battery Wiring 30
Figure B-3, Series-Parallel Wiring 30
Figure B-4, Battery Bank Wiring Examples (12-volt) 31
Figure C-1, AC Waveforms 33

List of Tables

Table 2-1, Min Cable and Max Fusing Guide at 5% Voltage Drop at Full Output 12
Table 3-1, Inverter Battery Turn On/Off Levels 22
Table 4-1, Basic Troubleshooting 24
Table A-1, Inverter Specifications 26
Table C-1, Typical Appliance Power Consumption 32

1.0 Introduction

Congratulations on your purchase of an N Series inverter from DMX Power. The N Series is a low frequency, pure-sine wave, standalone inverter designed to provide 120 VAC in a single unit to power loads in end applications.

The N Series inverter utilizes an iron-core transformer that can handle the frequent power surges associated with industrial grade tools, pumps, heaters, and motors.

NOTICE

This is a sizable manual and much of it is fairly technical. Terms may be used throughout the manual that are unfamiliar to you. Refer to the Inverter/Charger Terminology glossary in Appendix D for clarification.

The N Series inverter includes the following features:

- 1800, 2400, and 3000 watt model in a small footprint—less area needed for installation
- 120 VAC single-phase output in a single inverter
- Engineered construction and cooling methods
- Thermally controlled cooling fan
- Enclosed AC and DC cable connection
- Remote ON/OFF switch hookup
- GFCI outlet protection
- LED indication of External power, Inverter power, Low input voltage, High temperature, and Overload
- Automatic electronic short circuit/overload protection
- Automatic over temperature shutdown
- Output circuit breakers
- Automatic low battery shutdown at 10.5 VDC (with in-rush delay)

Regulatory Compliance

The N series has been tested and listed to UL458, 1st Edition (Inverters, Converters and Controllers for Use in Independent Power Systems) for use in the US; and is also certified to CSA C22.2 No. 107.1-01 (General Use Power Supplies) for use in Canada. It has been tested and certified to these product safety standards by Underwriters Laboratory (known as UL), which is a Nationally Recognized Testing Laboratory (NRTL). NRTL's are qualified organizations that meet Occupational Safety and Health Administrator (OSHA) regulations to perform independent safety testing and product certification. **UL/cUL 458 Power Inverter, E100666W**

1.1 How an Inverter Works

Inverter Mode

When the inverter is properly connected to batteries and turned on, the direct current (DC) from the batteries is transformed into a pure sine wave alternating current (AC). This AC is similar to the voltage provided by your utility and is used to power any electrical appliances (i.e., AC loads) connected to the inverter's output.

1.2 Advantages of a Pure Sine Wave vs a Modified Sine Wave Inverter

Today's inverters come in three basic output waveforms: square wave, modified sine wave (which is actually a modified square wave) and pure sine wave. Modified sine wave inverters approximate a pure sine wave form and will run most appliances and electronics without any problems. These inverters are less expensive, and therefore, offer a viable alternative to more expensive pure sine inverters.

The output of the N Series inverter—which is pure sine wave—is equal to, or in many cases, better than the utility power used in your home. Virtually any electronic device will operate from a pure sine wave inverter. Motors run cooler, microwaves usually cook faster, and clocks keep better time just to name a few examples. Without compromising quality or performance, the N Series provides you with all the advantages of a pure sine wave inverter at a much lower cost than many on the market.

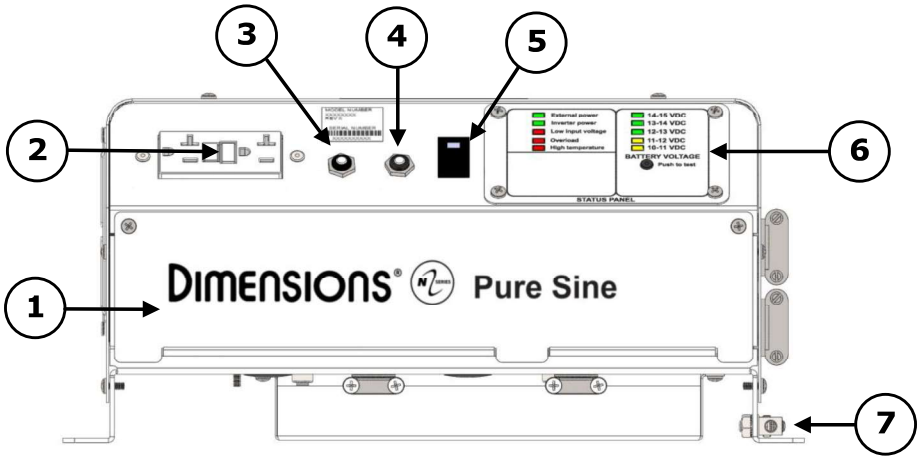

Figure 1-1, Power Switch, Status LED, and Accessory Connection Ports

1.3 Features and Benefits

The N Series inverter is designed to allow quick access to wiring, circuit breakers and controls, and easy viewing of the LED (Light Emitting Diode) status indicators. Its sheet metal chassis with one-piece aluminum cover ensures maximum durability with minimum weight. The L-Case N Series has the following external features (see Figures 1-1, 1-2, and 1-3):

1 **Wiring Access Cover** – an access cover for the DC and AC wiring.

2 **GFCI (Ground Fault Circuit Interrupter)**– an outlet that shuts off automatically when an electrical fault is detected.

NOTICE

Provides 120 VAC output. Only replace with an approved GFCI.
Includes GFCI receptacle protection.

3 **Branch Output Breaker –** a switch that automatically interrupts the current of an overloaded electric circuit. Pushing the button will reset the breaker to normal operation.

4 **Output Breaker –** a switch that automatically interrupts the current of an overloaded electric circuit. Pushing the button will reset the breaker to normal operation.

5 **Local ON/OFF Switch** – a momentary pushbutton switch that alternately turns the

6 **Status LED Indicator** – a green LED that illuminates to provide information on inverter operation.

7 **DC Equipment Ground Terminal** – ties the exposed chassis of the inverter to the DC grounding system.

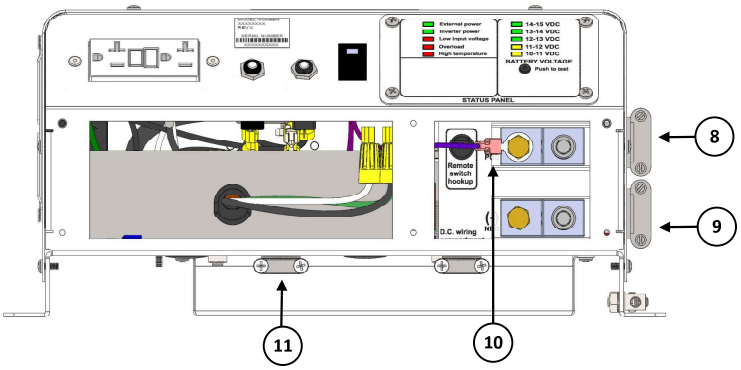

Figure 1-2, Electrical Connection Points

8 **Positive DC Terminal** – a connection point for the positive (+) cable from the battery bank.

9 **Negative DC Terminal** – a connection point for the negative (–) cable from the battery bank.

10 **Remote Switch Hookup "Purple Wire" (Optional)** – Hookup for an optional remote switch with an integral LED. The switch is used to control the inverter remotely.

11 **AC Output Wires** – wires for external load connection.

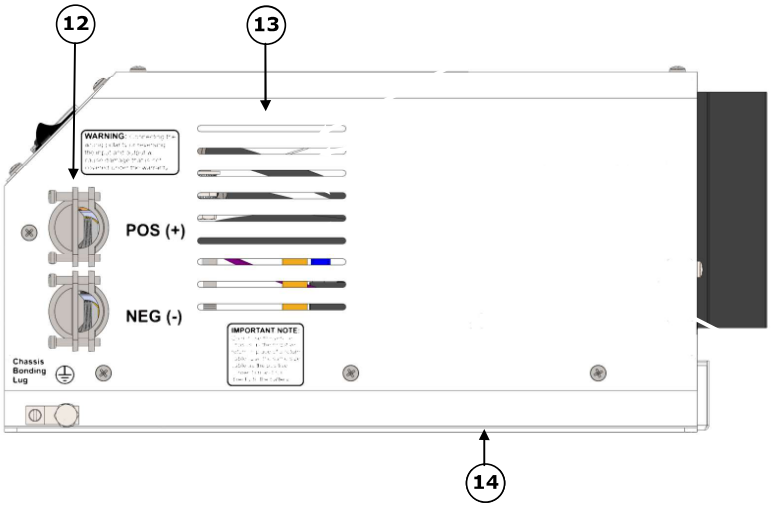

Figure 1-3, Right Side Features

12 **DC Entry Connections** – two 3/4" knockouts with cable-clamp strain reliefs to accommodate and hold the DC input field wiring.

13 **Exhaust Air Vents** – ventilation openings that allows heated air to be removed by the thermally controlled cooling fan.

14 **Mounting Flange**– secures the inverter to a shelf or wall.

2.0 Installation

Before proceeding, read the entire installation section to determine how you are going to install your L-Case inverter. The more thorough you plan in the beginning, the better your inverter needs will be met.

WARNING

Installations should be performed by qualified personnel, such as a licensed or certified electrician. It is the installer's responsibility to determine which safety codes apply and to ensure that all applicable installation requirements are followed. Applicable installation codes vary depending on the specific location and application of the installation.

CAUTION

Review the "Important Product Safety Information" on pages ii-v before proceeding with the installation.

CAUTION

The inverter is heavy (29 lbs). Use proper lifting techniques during installation to prevent personal injury.

The diagrams shown in this manual are provided to assist you in planning and designing your installation. They are not intended to override or restrict any national or local electrical codes. These diagrams should not be the determining factor as to whether the installation is compliant, that is the responsibility of the electrician and the on-site inspector.

2.1 Pre-Installation

2.1.1 Unpacking and Inspection

Carefully remove the L-Case N Series inverter from its shipping container and inspect.

If the inverter appears to be damaged, contact your authorized Dimensions product dealer or DMX Power. If at all possible, keep your shipping box. It will help protect your inverter from damage if it ever needs to be returned for service. Save your proof-of-purchase as a record of your ownership; it will also be needed if the unit should require in-warranty service.

Record the unit's model and serial number in a safe place in case you need to provide this information in the future. It is much easier to record this information now, instead of trying to gather it after the unit has been installed.

2.1.2 Required Components and Materials

Hardware/Materials:

- Cable ties

Tools:

- #2 Phillips screw driver(with magentic end)
- Slotted screw driverdrill and drill bits
- Drill and drillbits
- Wire Termination Crimper
- Wire cutters
- Wire strippers
- Tape measure
- Needle nose pliers
- Pencil or marker

2.1.3 Locating the Inverter

Only install the inverter in a location that meets the following requirements:

Clean and Dry – The inverter should not be installed in an area that allows dust, fumes, insects or rodents to enter or block the inverter's ventilation openings. This area also must be free from any risk of condensation, water, or any other liquid that can enter or fall on the inverter.

Cool – The inverter should be protected from direct sun exposure or equipment that produces extreme heat.

NOTICE

The ambient temperature around the inverter must not exceed 104°F (40°C) to meet power specifications.

Ventilation – In order for the inverter to provide full output power and avoid over-temperature fault conditions, do not cover or block the inverter's ventilation openings or install this inverter in an area with limited airflow. The inverter uses one internal fan to provide forced air cooling, these fans pull in air through the intake vents and blow out air through the exhaust vents. A clearance of 1/2" is required on all sides except the bottom of the inverter.

⚠WARNING

Keep any flammable/combustible material (i.e., paper, cloth, plastic, etc.) that may be ignited by heat, sparks, or flames at a minimum distance of 2 feet (61 cm) away from the inverter. Do not install this inverter in any area that contains extremely flammable liquids like gasoline or propane, or in locations that require ignition-protected devices.

⚠CAUTION

Do not install this inverter in a zero clearance compartment. Do not cover or obstruct the ventilation openings—overheating may result.

DANGER

The unit should not be installed in the same compartment as the batteries or mounted where it will be exposed to gases produced by the batteries.

DANGER

These gases are corrosive and will damage the inverter; also, if these gases are not ventilated and allowed to collect, they could ignite and cause an explosion

NOTICE

The absolute maximum recommended battery cable length is 20 feet (6.09 m).

Accessible – Do not block access to the inverter's ON/OFF switch and status indicator. Also, allow enough room to access the **AC and DC wiring terminals and connections**, as they need to be checked and tightened periodically.

Away from sensitive electronic equipment – High powered inverters can generate levels of RFI (Radio Frequency Interference). Locate any electronic equipment susceptible to radio frequency and electromagnetic interference as far away from the inverter as possible.

2.1.4 Mounting the Inverter

The inverter base should be mounted on a noncombustible surface*****. This surface and the mounting hardware must also be capable of supporting at least 30 pounds. To meet regulatory requirements, the L-Case N-Series inverter must be mounted in one of the following positions—as shown in Figure 2-1:

- above or under a horizontal surface (shelf or table),
- or, on a vertical surface (wall) with the DC terminals toward the bottom

After determining the mounting position, refer to the physical dimensions as shown in Figure 2-3 or use the base of the inverter as a template to mark your mounting screw locations. After marking the mounting screw locations, mount the unit with appropriate mounting hardware. Mounting hardware includes four of each: 1/4-20 steel bolts, flat washers, lock washers, and nuts. The length of the bolts should be equal to the thickness of the mounting surface plus 3/4".

***** *Noncombustible surface – Material that will not ignite, burn, support combustion, or release flammable vapors when subjected to fire or heat as per the ASTM E136 standard (such as fiber cement board, stone, steel, iron, brick, tile and concrete). Common building materials such as gypsum board as well as any paint, wall coverings, and certainly wood will not suffice.*

CAUTION

The inverter shall not be mounted with the cooling fan or vents facing upwards.

NOTICE

This device shall be mounted in a location that is accessible in order to reset a circuit breaker or GFCI (if provided) in case one trips during normal operation

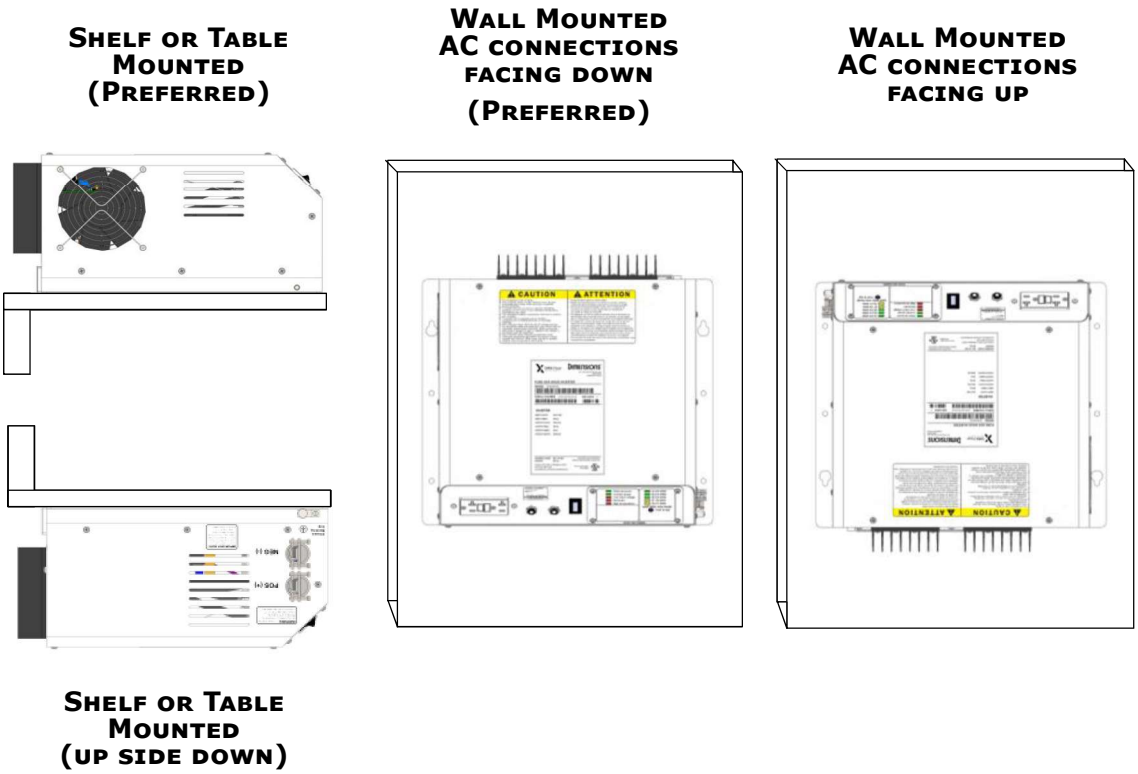

Figure 2-1, Approved Mounting Positions

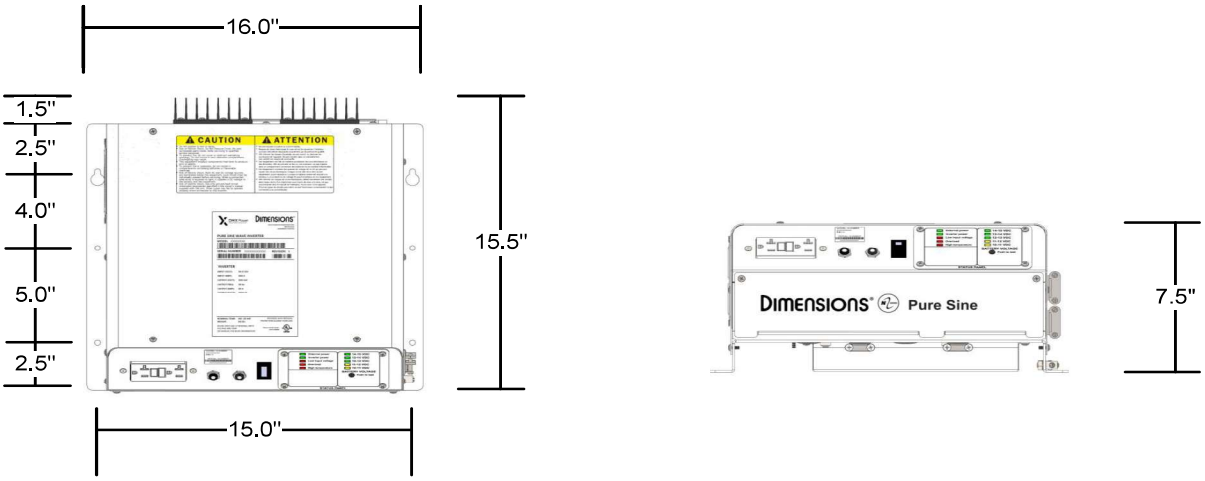

Figure 2-2, L-Case N Series Dimensions

2.1.5 Wiring the Inverter

This section also describes the requirements and recommendations for wiring the L-case N Series inverter. Before wiring the L-case N Series inverter, read all instructions.

All wiring should meet all local codes and standards and be performed by qualified personnel such as a licensed electrician.

The NEC (National Electric Code, ANSI/NFPA 70) for the United States and the CEC (Canadian Electrical Code) for Canada provide the standards for safely wiring residential and commercial installations. The NEC/CEC lists the requirement for wire sizes, overcurrent protection, and installation methods and requirements.

Inverter systems involve power from multiple sources (inverter, generator, utility, batteries, solar arrays, etc.) which make the wiring more hazardous and challenging.

The input and output AC and DC circuits are isolated from the inverter chassis. The inverter system grounding is the responsibility of the installer in accordance with the NEC.

WARNING

To prevent accidental shock, ensure all sources of DC power (i.e., batteries, solar, wind, or hydro) and AC power (utility power or AC generator) are de-energized (i.e., breakers opened, fuses removed) before proceeding.

2.1.6 Protecting Wire – Conduit Box or Inverter Enclosure

The AC and DC wires into and out of the inverter must be protected by rigid tubing, as required by code to comply with installations. This is normally done by feeding the wires through conduit.

2.1.7 Wiring Requirements

- All conductors that are at risk to physical damage must be protected by conduit, tape, or placed in a raceway.
- Always check for existing electrical, plumbing, or other areas of potential damage prior to making cuts in structural surfaces or walls.
- Use only copper wires with a minimum temperature rating of 194°F (90°C).

CAUTION

Both AC and DC overcurrent protection must be provided as part of the installation.

CAUTION

The inverter requires a reliable negative and ground return path directly to the battery.

2.1.8 Wire Routing

Before connecting any wires, determine all wire routes throughout the home to and from the inverter. Typical routing scenarios are:

- DC input wiring from the batteries to the inverter
- AC output wiring from the inverter to dedicated circuits
- Remote control cable (optional) to the inverter
- Ground wiring from the inverter to an external ground

2.1.9 Torque Requirements

Torque all ground connections to 40 in-lbs. Torque DC cable connections to 50 in-lbs The AC wiring connections are done with wire nuts.

2.2 DC Wiring

This section describes the inverter's required DC wire sizes and the recommended disconnect/ overcurrent protection, and how to make the DC connections to the inverter and the battery bank. Refer to Figure 2-1 and Figure 2-4 when connecting the DC wires.

WARNING

Even though DC voltage is "low voltage" significant hazards may be present, particularly from short circuits of the battery system.

CAUTION

The inverter is NOT reverse polarity protected—which means that if the negative and positive battery voltage are connected backwards to the inverter, the inverter will likely be damaged. You should verify the correct voltage polarity using a voltmeter BEFORE connecting the DC wires. To avoid polarity problems, color code the DC cables/wires with colored tape or heat shrink tubing: RED for positive (+), WHITE for negative (−), and GREEN for DC ground.

CAUTION

To remove battery power from the inverter, disconnect the battery positive connection before the negative connection. This requirement can prevent damage to the inverter and/or an accessory connected to the inverter.

CAUTION

Before wiring the DC cables, review the safety information at the beginning of this manual and the following guidelines to ensure a safe and long-lived system:

- The DC positive and negative cables connected to the inverter from the battery bank should be tied together with wire ties or electrical tape approximately every 6 inches (15.2 cm). This helps improve the surge capability and reduces the effects of inductance, which improves the inverter waveform and reduces the wear of the inverter's filter capacitors.
- DC input wires with a maximum size of 1/0 should be used to connect the DC wires to the inverter's DC terminals.
- The battery bank voltage MUST match the DC voltage required by the inverter (i.e., 12-volt battery bank for a 12-volt inverter), or the inverter may be damaged.
- To ensure the maximum performance from the inverter, all connections from the battery bank to the inverter should be minimized—the exception is the DC overcurrent disconnect in the positive line and a shunt in the negative line. Any other additional connection will contribute to additional voltage drops, and these extra connection points may loosen during use.
- Check all connections to the battery terminals periodically (once a month) for proper tightness. The torque requirement for the DC terminals is 50 in-lbs. Be aware that overtightening or misthreading the nuts on the DC terminals can cause the bolts to strip and snap/break off.
- A brief spark or arc may occur when connecting live battery cables to the inverter's DC terminals; this is normal and due to the inverter's internal capacitors being charged.

2.2.1 DC Wire Sizing

It is important to use the correct DC wire to achieve maximum efficiency from the system and to reduce fire hazards associated with overheating. Always keep your wire runs as short as practical to prevent low voltage shutdowns and to keep the DC breaker from nuisance tripping (or open fuses) because of increased current draw.

Use Table 2-1 to select the minimum DC wire size (and corresponding overcurrent device) required based on your inverter model. The cable sizes listed in Table 2-1 for your inverter model are required to reduce stress on the inverter, minimize voltage drops, increase system efficiency, and ensure the inverter's ability to surge heavy loads.

NOTICE

Using a smaller cable may casue a low battery or high temperature fault.

If the distance from the inverter to the battery bank is **>5 feet (1.5 m)**, the DC wire size needs to be increased. Longer distances cause an increase in resistance, which affects inverter performance. While continuing to use the overcurrent device per Table 2-1, **refer then to Table 2-2 to determine the minimum DC wire size needed for various distances—based on the model of your inverter.**

2.2.2 DC Overcurrent Protection

Wiring should meet all local codes and standards and be performed by qualified personnel such as a licensed electrician.

⚠CAUTION

For safety and to comply with electrical code regulations, you must install a DC overcurrent protection device in the positive DC cable line to protect your DC cables.

This DC overcurrent device can be a fuse or circuit breaker and must be DC rated. It must be correctly sized according to the size of DC cables being used—which means it is required to open before the cable reaches its maximum current carrying capability, thereby preventing a fire. In a residential or commercial electrical installation, the NEC requires both overcurrent protection and a disconnect switch. If a circuit breaker is used as the overcurrent protection device, it can also be used as the required DC disconnect. For maximum protection, install the circuit breaker (or fuse/disconnect) as near as practical to the batteries.

If a fuse is used as an overcurrent device, a Class-T type or equivalent is required. This fuse type is rated for DC operation, can handle the high short-circuit currents, and allows for momentary current surges from the inverter without opening. However, because the fuse can be energized from both directions, if it is accessible to unqualified persons, the NEC requires that it be installed in a manner that the power can be disconnected on both ends of the fuse before servicing.

Use Table 2-1 to select the DC overcurrent device based on the minimum wire size according to your inverter model.

		Inverter to Battery Est. Cable Length in Feet		
Inverter Model	**Full Load (ADC)**	**1 to 10 feet @ 25°C (77°F)**	**11 to 15 feet @ 25°C (77°F)**	**16 to 20 feet @ 25°C (77°F)**
12/1800N	180	2 AWG, 300 A Fuse	1/0 AWG, 300 A Fuse	2/0 AWG, 300 A Fuse
12/2400N	240	1/0 AWG, 400 A Fuse	2/0 AWG, 400 A Fuse	4/0 AWG, 400 A Fuse
12/2400DN	240	1/0 AWG, 400 A Fuse	2/0 AWG, 400 A Fuse	4/0 AWG, 400 A Fuse
12/3000N	300	2/0 AWG, 500 A Fuse	4/0 AWG, 500 A Fuse	4/0 AWG, 500 A Fuse
12/3000DN	300	2/0 AWG, 500 A Fuse	4/0 AWG, 500 A Fuse	4/0 AWG, 500 A Fuse
12/3600NPL	360*	4/0 AWG, 500 A Fuse	4/0 AWG, 500 A Fuse	Not Recommended

**12/3600NPL can delivery 3600 watts of continuous power for 30 minutes. The continuous output after 30 minutes is 3000 watts.*

Table 2-1, Min. Cable and Max. Fusing Guide at 5% Voltage Drop at Full Output

2.2.3 DC Cable Connections

Do not put anything between the DC cable ring lug and the battery terminal post. When connecting the DC cable to the battery or to the inverter's DC terminals, the cable should be placed directly against the inverter or battery terminals. Incorrectly installed hardware causes a high resistance connection which could lead to poor inverter performance, and may melt the cable and terminal connections.

Refer to Figures 2-3 and 2-4 for the correct way to connect the DC cables. Tighten the DC cable connections to 50 in-lbs.

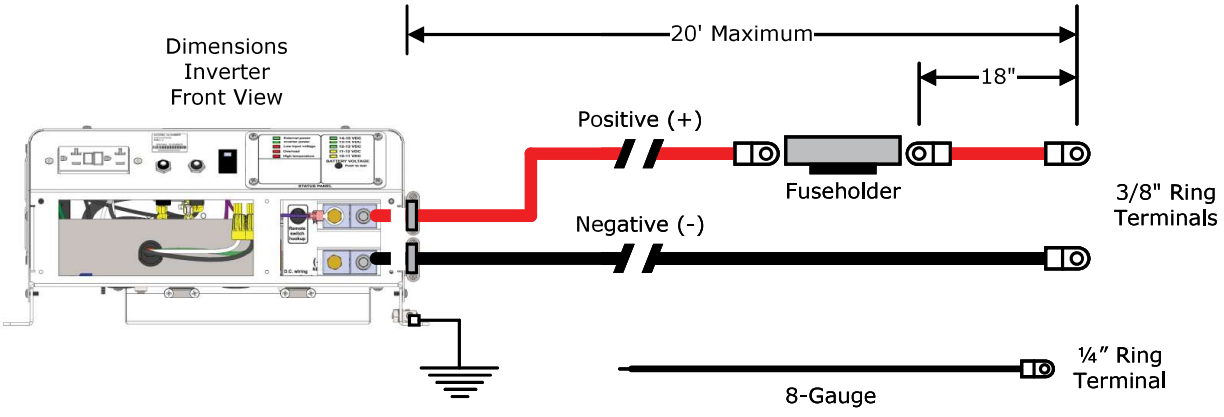

Figure 2-3, Typical DC Cable Connections

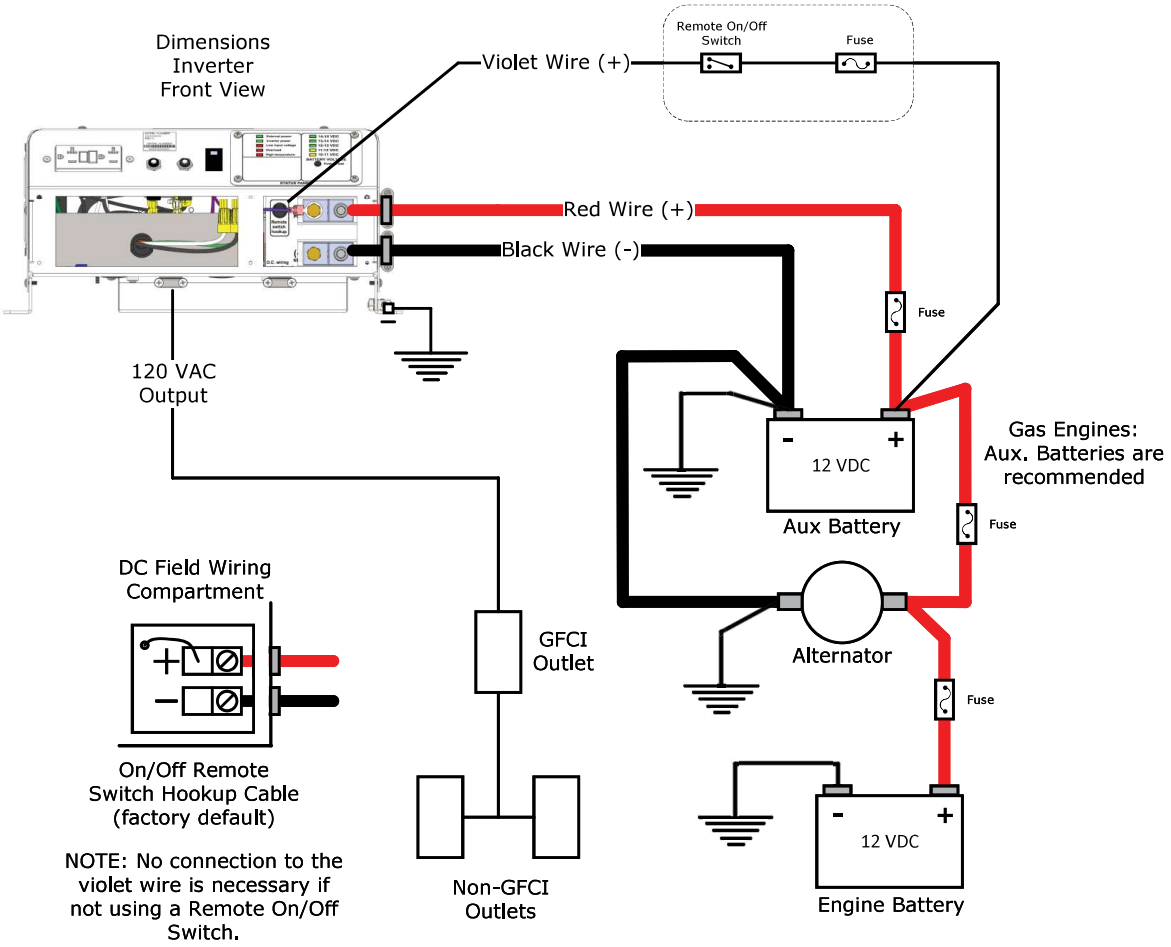

Figure 2-4, Typical Wiring Diagram

2.2.4 Typical Cable Connection Procedure

NOTE: Refer to figures 2-3 and 2-4 for a typical DC wiring diagram. See table 2-1 for proper cable sizes.

1. Remove the in-line fuses from the fuse holders for cable installation.
2. Connect the inverter's bonding lug to ground or vehicle chassis.
3. Connect the "inverter cable" set to appropriate DC input lugs.
4. Connect the ring terminated ends of the "inverter cable" set directly to the appropriate battery post.
5. Connect the load side of the remote "On/Off" switch to the hookup lead cable extending from the inverter and the fused side to the positive post of the battery.
6. Install the in-line fuses removed in step 1 back into the fuse holders. A typical one-time spark will occur when this final connection is made.

2.2.5 Wiring the Battery Bank

⚠DANGER

Lethal currents will be present if the positive and negative cables attached to the battery bank touch each other. During the installation and wiring process, ensure the cable ends are insulated or covered to prevent touching/shorting the cables.

⚠CAUTION

DO NOT connect the DC wires from the battery bank to the inverter until 1) <u>all</u> DC and AC wiring is complete, 2) the correct DC and AC overcurrent protection has been installed, and 3) the correct DC voltage and polarity have been verified.

NOTICE

For the N Series inverter/charger to perform optimally, a <u>minimum</u> battery bank of 200 AH is recommended for moderate loads (<1000W), and greater than 400 AH for heavy loads (≥1000W).

An inverter cable kit (a positive cable, negative cable, and proper fuse) is needed to connect the inverter to a battery bank. See tables 2-1 and 2-2 for proper cable sizes and fuses.

An 8 AWG cable is also required to connect the inverter's bonding lug to the ground.

The inverter cable length and the size of the inverter will determine the cable gauge and the size fuse to use. The maximum inverter cable recommended is 20 ft., and it must be fused within 18 in. from the positive (+) terminal of the battery. Keep the cable lengths between the battery and inverter as short as possible.

Depending upon the type of batteries you use in the installation (6 or 12 VDC), the batteries must be wired in series, parallel, or series-parallel to provide the correct voltage (see Appendix B – Battery Information for guidance on wiring batteries together). The interconnecting DC wires must be sized and rated to handle the current required for each battery string. We recommend sizing the interconnect cables the same as those that are used between the battery bank and the inverter. This ensures the cable can handle the required current and prevents miscalculations that may lead to underestimating the cable size.

Place the batteries as close as practical to the inverter, preferably in an insulated and ventilated enclosure. Allow adequate space above the batteries to access the terminals and vent caps (as applicable). Also, allow at least 1” (2.5 cm) of space between the batteries to provide good air flow. DO NOT mount the batteries directly under the inverter.

WARNING

DO NOT mount the batteries directly under the inverter.

WARNING

Install batteries in a well-ventilated area. Batteries can produce explosive gasses. For compartment/enclosure installations, always vent batteries to the outside.

NOTICE

To ensure the best performance from your inverter system, batteries should be of the same size, type, rating, and age. Do not use old or untested batteries.

2.2.6 Wiring the Inverter to the Battery Bank

CAUTION

The inverter is NOT reverse polarity protected—if this happens the inverter will be damaged and will not be covered under warranty. Before connecting the DC wires from the batteries to the inverter, verify the correct battery voltage and polarity using a voltmeter. If the positive terminal of the battery is connected to the negative terminal of the inverter and vice versa, severe damage will result. If necessary, color code the cables (with colored tape): RED for positive (+), and WHITE for negative (–) to avoid polarity confusion.

NOTICE

The DC overcurrent device (i.e., circuit breaker or fuse) must be placed in the positive (red) DC cable line between the inverter’s positive DC terminal and the battery’s positive terminal (red)—as close to the battery as possible.

DC Ground Wire

1. Route an appropriately sized DC grounding wire (green or bare wire) from the inverter's DC equipment ground terminal (Figure 1-1, Item 7) to a dedicated system ground. Recommended tightening torque is 40 in-lbs. Refer to Section 2.4 for grounding information and sizing the DC ground wires.
2. Ground chassis using 8 AWG cable.

DC Negative Wire

1. Route an appropriately sized DC negative wire (black) from the negative terminal of the battery bank to the inverter's negative terminal (Figure 1-2, Item 9).

NOTICE

If installing a battery monitor such as the ME-BMK, install a DC shunt in-line with the negative battery cable.

DC Positive Wire

1. Mount the circuit breaker assembly as near as practical to the batteries, and then open the circuit breaker.

WARNING

DO NOT close the DC circuit breaker to connect battery power to the inverter at this time. This will occur in the **Functional Test** after the installation is complete.

NOTICE

If connecting live battery cables to the inverter's DC terminals, a brief spark or arc may occur; this is normal and due to the inverter's internal capacitors being charged.

2. Route and connect an appropriately sized DC positive wire (red) from the inverter's positive DC terminal (Figure 1-2, Item 8) to one end of circuit breaker (or DC fuse block).
3. Connect a short wire (same rating as the DC wires) to the other side of the DC circuit breaker and the other end of the short wire to the positive terminal of the battery bank (see Figure 2-3 for reference).
4. Ensure the DC wire connections (on the batteries and inverter) are installed correctly, and the hardware used to hold these connections are stacked correctly. Verify all DC connections are torqued to 50 in-lbs.
5. Attach the DC cover plate over the inverter's DC connectors.

If the batteries are in an enclosure, perform a final check of the connections to the battery terminals, then close and secure the battery enclosure.

2.3 AC Wiring

This section provides information on how to make the AC connections to the inverter using the correct AC wire size and the corresponding overcurrent protection.

2.3.1 Pre-AC Wiring Requirements

CAUTION

Before installing any AC wiring, review the safety information and cautionary markings at the beginning of this manual and the following guidelines.

- Always use properly rated circuit-breakers. If using an electrical sub-panel, circuit breakers can only be moved from the main electrical panel to the sub-panel if the breakers are also listed to be installed in the sub-panel.
- AC wiring must be no less than #10 AWG (5.3 mm^2) gauge copper wire and be approved for residential wiring per the NEC (THHN as an example).
- DO NOT connect the inverter's output to an external AC power source unless used in an AC coupled application*. NOT AC COUPLED Otherwise, severe damage to the inverter may occur; and this damage is easily detected and is not covered under warranty.
- The wire sizes recommended in this manual are based on the ampacities given in Table 310.16 (in conduit) or Table 310.17 (in free air) of the NEC, ANSI/NFPA 70, for 167°F (75°C) copper wire based on an ambient temperature of 86°F (30°C).

2.3.2 AC Wire Size and Overcurrent Protection

The AC output wiring must be sized to ensure the wires' ability to safely handle the inverter's maximum load current. After determining the proper AC wire sizes, the inverter's AC and output wires are required to be protected from short circuits and overloads by an overcurrent protection device, and have a means to disconnect the AC circuits.

Overcurrent protection is not included in the inverter and must be provided as part of the installation. The overcurrent protection device must be a circuit breaker or a fuse, and be properly sized and branch circuit-rated for the wire it is protecting and the appliances being powered.

Note¹ *– Per NEC, if the breaker is not rated for 100% continuous duty it must be derated by 80%.*

Note² *– Copper wire rated with 194°F (90°C) insulation at an ambient temp of 86°F (30°C).*

2.3.3 Recommended Ground Fault Circuit Interruption (GFCI) Breakers

In compliance with UL standards, DMX Power has tested GFCIs to ensure they function properly when connected to the inverter's AC output. See WARNING below.

WARNING

Risk of electric shock. Use only the following GFCIs receptacle: LEVITON GFNT2. Other types may fail to operate properly when connected to this inverter.

2.3.4 AC Output Wiring Connections

The N series I case inverter has a GFCI option and a Hotwire option.

The L-Case N Series inverter has three AC wires that are used to connect the inverter's AC output. To access these wires, remove the two Phillips screws that hold the AC access cover plate on the front of the inverter (see Figure 1-2).

2.3.5 Wiring the AC Output

The N Series L-Case provides 120V on the output. The AC output continues to produce 120VAC.

WARNING

Before making any AC connections, make sure the inverter is disconnected from the battery bank and that no AC power is connected to the inverter.

Final Inspection

Gently pull on the wires to ensure they are securely held, and ensure no bare wire is exposed.

The AC input and output wiring in the L-Case N Series inverter should be complete. Prior to re-attaching the AC access cover, review all AC wiring to ensure all connections are correct and secure.

2.4 Grounding Inverters

The L-Case N Series inverters use two separate electrical systems (AC and DC power), therefore each electrical system is required to be properly connected to a permanent, common "ground" or "earth" reference. An inverter system that is properly grounded limits the risk of electrical shock, reduces radio frequency noise, and minimizes excessive surge voltages induced by lightning. To understand how the conductors in the electrical circuit will be connected to the system ground, the following terms should be understood.

- **Grounded Conductor (GC):** The wire/cable in the electrical system that normally carries current (usually AC neutral and/or the DC negative); and is intentionally connected or "bonded" to the ground system. This wire, or the ends of this wire, should be colored white or gray.
- **Equipment Grounding Conductor (EGC):** A wire/cable that does not normally carry current and is used to connect the exposed metal parts of equipment—that might be accidentally energized—to the grounding electrode system or the grounded conductor. This wire or the ends of this wire should be green or green with a yellow stripe, or this wire can be bare copper.
- **Grounding Electrode Conductor (GEC):** The wire/cable that does not normally carry current, and connects the grounding electrode at the service equipment to the grounded conductor and/or the equipment grounding conductor.
- **Grounding Electrode (GE):** A ground rod or conducting element that establishes an electrical connection to the earth or common ground reference.
- **System Bonding Jumper** (**SBJ**)**:** The connection between the grounded circuit conductor in the electrical system and the equipment grounding conductor at a separately derived system.

There are two types of grounding – equipment grounding and system grounding.

Equipment Grounding – The exposed metal parts of equipment in a system usually don't carry electricity. However, if exposed metal becomes electrified by a live wire, a person touching this live part could complete the electrical circuit and receive a shock. Equipment grounding prevents shock by connecting all the exposed metal parts of equipment (via Equipment Grounding Conductors –EGC) together at a common ground point (Ground Busbar–GBB). This common ground point—installed in the service disconnect panel for each electrical system (AC and DC)—is then connected (via Grounding Electrode Conductor–GEC) to the common ground reference, such as a ground rod (Grounding Electrode–GE). This connection to earth is made at only one point in each electrical system; otherwise, parallel paths will exist for the currents to flow. These parallel current paths would represent a safety hazard and are not allowed in installations wired per the NEC/CEC.

System Grounding – Takes one of the current-carrying conductors (Grounded Conductor–GC) and attaches it to the common ground point (Ground Busbar–GBB), usually by a System Bonding Jumper (SBJ) in each electrical service disconnect panel. On the DC side that is the negative conductor; on the AC side it's the neutral conductor. The closer the grounding connection is to the source, the better the protection from surges due to lightning.

2.5 Remote Inverter "On/Off" Switch

An optional customer supplied remote switch with an integral LED can be used to control the inverter. Route the cable to the inverter and plug into the connector on the back.

1. Mount the remote switch in a convenient location.
2. Use an 18 AWG wire and a single pole single throw switch hookup lead extending from the inverter.
3. Wire from the remaining connection on the remote switch to the battery positive (+) terminal.
4. Install a 5A in-line fuse in series within 10 inches from the positive (+) terminal of the battery.

2.6 Final Inspection

1. Verify all cables/conduit runs are secured with wire ties or other non-conductive fasteners to prevent chafing or damage from movement and vibration.
2. Verify strain reliefs or grommets are in place to prevent damage to the wiring or conduit where it passes through walls, bulkheads, or other openings.
3. Verify all AC connections are correct.
4. Replace the covers on the main electrical/distribution panel.
5. Replace the chassis access cover.

NOTICE

If required by code, have the installation inspected by an electrical inspector.

2.7 Functional Test

After all electrical connections to the inverter, batteries, AC source and sub-panel have been completed, follow these steps to test the installation and the inverter's operation.

⚠CAUTION

Use a multimeter to verify the correct DC voltage for your particular inverter model (i.e., 12-volt battery bank for a 12-volt inverter) and to ensure the polarity of the battery voltage is correct (battery positive connected to the inverter positive terminal and the battery negative connected to the inverter negative terminal).

1. Apply battery power to the inverter by closing the DC circuit breaker. The inverter will remain off, but the green status indicator on the front of the inverter will quickly blink once to indicate that DC power has been connected and the inverter is ready to be turned on.
2. Prior to turning on the inverter, make sure all AC loads (i.e., appliances) are NOT connected to the inverter's output or to any AC outlets powered by the inverter.
3. Move the inverter's ON/OFF switch to turn the inverter on. Verify the inverter's status indicator is on—indicating the inverter is on.
4. Connect a 10-25 watt light bulb to the inverter output and verify it comes on and shines normally. DO NOT connect anything larger than a 25-watt light bulb until all wiring and voltages are confirmed to be correct.

NOTICE

The inverter's AC output voltage will not be correct until a load greater than 5 watts (default setting) is connected to the inverter. A 10-25 watt light bulb is used as it is a sufficient load to bring the inverter up to full voltage.

5. Check the AC output voltage of the inverter by connecting an AC voltmeter to the output terminals as shown in Figure 1-2 (verify the correct output voltages).
6. Move the inverter's ON/OFF switch to turn the inverter off. The inverter's status indicator and the connected load should go off.
7. If the inverter passes all the steps, the inverter is ready for use. If the inverter fails any of the steps, refer to the Troubleshooting section in this manual.

3.0 Operation

Once the inverter has been fully installed, wired, and DC power has been applied, the inverter is ready to turn on. The status LED beneath the AC wiring box on the left side of the inverter shows the current state of the inverter.

3.1 Inverter Power Mode

Usage: Any 120VAC, 60 Hz single phase product within the inverter's power rating.

The inverter front status LED will be green while the inverter is on. The AC power produced by the inverter comes from the energy stored in the battery bank through an electronic inversion process. A transformer, a Metal Oxide Silicon Field Effect Transistors (MOSFET), a filter capacitor, and a microprocessor are used to generate clean AC power.

The inverter will operate at DC input voltages ranging from 10.5 to 20 volts. Above 20 volts, the inverter may stop operating due to input voltage being out of range. The inverter can tolerate up to 24 VDC for 5 minutes. Durations longer than 5 minutes will result in a shut down. The input voltages above 24 VDC will result in an immediate shutdown. The inverter will restart when the input voltage drops below 16 VDC. When the input voltage drops to 10.5 volts, the inverter will stop operating due to a low battery condition. When the lead-acid battery bank voltage drops to 10.5 volts, the battery is fully discharged.

Turn the Inverter On: The local "On/Off" switch located on front or the remote "On/Off" switch can be used to control the inverter. Both the local and remote switch are configured in series. To control the inverter remotely, set the local "On/Off" switch to on.

3.2 Protection Circuitry Operation

The inverter is protected against fault conditions and in normal usage it will be rare to see any. However, if a condition occurs that is outside the inverter's normal operating parameters, it will shut down and attempt to protect itself, the battery bank, and your AC loads. If there is a condition that causes the inverter to shut down, it may be one of the following conditions [also refer to the Troubleshooting section (Section 4.3) to help diagnose and clear the fault condition]:

- **Low Battery** – The inverter shuts off whenever the battery voltage falls to the LBCO (Low Battery Cut Out) level to protect the batteries from being over-discharged. After the inverter has reached the LBCO level and turns off, the inverter automatically restarts after one of the following conditions are met:
  1. Battery voltage rises to the LBCI (Low Battery Cut In) level.

  Refer to Table 3-1 to determine the LBCO and LBCI levels for your inverter model.
- **High Battery** – In the event the battery voltage approaches the HBCO (High Battery Cut Out) level, the inverter automatically shuts down to prevent it from supplying unregulated AC output voltage. The inverter's status LED turns off when a high battery fault condition occurs. The inverter automatically restarts when the battery falls to the HBCI (High Battery Cut In) level. Refer to Table 3-1 to determine the HBCO and HBCI levels for your inverter model.

NOTICE

High battery voltage may be caused by excessive or unregulated voltage from the solar panels or other external charging sources.

- **Overload** – During inverter and standby operation, the inverter monitors the DC and AC current levels. In the event of a short-circuit or an overload condition for more than a few seconds, the inverter will shut down. To start operating after this fault, the inverter must be restarted (turned back on) once the inverter's AC loads are reduced/removed.
- **Over-temperature** – If internal power components begin to exceed their safe operating temperature level, the inverter shuts down to protect itself from damage. The inverter's status LED turns off to indicate the over-temperature fault condition. The inverter automatically restarts after the unit cools down.
- **Internal Fault** – The inverter continually monitors several internal components and the processor communications. If a condition occurs that does not allow proper internal operation, the inverter shuts down to protect itself and the connected loads. The inverter needs to be reset to start operating—refer to Section 4.4 for information on resetting the inverter.

Table 3-1, Inverter Battery Turn On/Off Levels

Inverter Battery Turn ON/OFF Levels	Inverter Model					
	12/1800N	12/2400N	12/2400DN	12/3000N	12/3000DN	12/3600NPL
HBCO	>20.0 VDC					
HBCI	16.0 VDC					
LBCI	13.5 VDC					
LBCO (5 sec delay)	10.5 VDC (8.5–10.5 VDC)					
LBCO (immediate)	8.0 VDC					

Inverters manufactured 2024 or later will use updated voltage parameters defined above; older manufacturing dates will only have LBCO at 10.5 VDC or custom 11.0 VDC

Status LED Indicator: The status indicator LEDs on the front of the inverter provides information on the operational mode of the inverter. Watch these indicators to determine the inverter's operational condition using the information in table 4-1.

3.3 Inverter Fan Operation

The inverter contains one internal cooling fan that is automatically controlled. The inverter's fan will come on under the conditions listed below:

- Fan runs full speed if the internal transistors (FETS) reach 45° degrees Celsius or the power transformer reaches 65° degrees Celsius.

The fan shuts down when none of the above conditions are met, or if the battery voltage is below 9.5V.

4.0 Maintenance and Troubleshooting

The following information is provided to help you keep your L-Case N Series inverter in optimum operational condition.

WARNING

Do Not Remove chassis cover. No user-serviceable parts inside. Call or email customer service for free consultation during business hours (7:30 AM - 5:30 PM CST).

4.1 Recommended Inverter and Battery Care

The L-Case N Series inverter is designed to provide you with years of trouble-free service. Even though there are no user-serviceable parts, it is recommended that every 6 months you perform the following maintenance steps to ensure optimum performance and extend the life of your batteries.

WARNING

Prior to performing any checks, switch OFF both the AC and DC circuits.

- Visually inspect the batteries for cracks, leaks, or swelling—replace if necessary
- Use baking soda to clean and remove any electrolyte spills or buildups
- Check and tighten all battery hold-down clamps (if applicable)
- Clean/tighten all battery terminals and connecting cables [50 in-lbs]
- Check and fill battery water levels (liquid lead acid batteries only)
- Check individual battery voltages (load test those that have a voltage difference of more than 0.3 VDC from each other)—replace if necessary
- Check all cable runs for signs of chafing—replace if necessary
- Check the inverter's cooling vents—clean as necessary
- Check/tighten the inverter's internal AC wire nut connections.

4.2 Storage for Mobile Installations

When placing the RV, boat or truck into storage, it is recommended that you perform the following to ensure the system is properly shut down (or properly configured for storage). This is especially important for maintaining the batteries.

- Perform the recommended maintenance steps listed in Section 4.1
- Fully charge the batteries
- Verify the inverter is switched OFF
- Switch OFF all unnecessary AC and DC loads

4.3 Troubleshooting

The N Series inverter is a fairly simple device to troubleshoot. The following chart is designed to help you quickly pinpoint the most common inverter failures.

Table 4-1, Basic Troubleshooting

No LED Test light is off	Check if the in-line fuse which is located within 18” from the battery’s positive post is installed or open.	
	Check if DC connections are tight and clean.	
	Check if the switches are on. Check if any of the wires connected to the remote switch is loose or disconnected.	
“Inverter Power” LED is on Test light is off	Check if the GFCI is tripped. Reset if necessary by cycling power.	If GFCI is set, disconnect all loads and connect a test light. If the test light is off, replace the GFCI or return the inverter for service.
	For hardwired connections, remove the DC input voltage and inspect the AC hardwire connections.	
	Check if the AC output circuit breaker is tripped.	
“Low Input Voltage” LED is on	The use of a battery isolator is not recommended due to excessive voltage drop across isolator terminals.	
	Battery voltage must be above the low battery threshold (10.5 VDC measured at the inverter) for the inverter to be on.	
	Check for proper DC wire AWG (see DC Wire Gauge & Fusing section).	
“Overload” LED is on	Unplug all loads and reset the inverter. To reset, turn the unit off and wait for 30 seconds to turn on again.	If the overload condition clears, check for short circuits or check load size versus inverter output wattage size.
		If the overload persists, possible failed inverter.
“High Temperature” light is on	Allow the unit to cool down, the high temp fault should self-correct.	
	Verify that all vent openings are clear of obstruction.	
	Reduce ambient temperature and/or load.	

4.4 Resetting the Inverter

Under some fault conditions (e.g., an internal fault), the inverter will need to be reset.

4.4.1 Performing an Inverter Reset

To perform an inverter reset (also known as a "soft reset"):

1. Turn the power OFF on the inverter.
2. Wait 30 seconds.
3. Turn the power ON on the inverter.

If the inverter reset fails, you will need to perform a power reset using the procedure below. In either case, if an internal fault does not clear, contact DMX Power Tech Support at support@dmx-power.com

NOTICE

The Power ON/OFF switch is a slide type switch which operates by pressing the switch to the desired setting. Be careful not to apply too much force when pushing or the switch might break.

1. Switch the Power ON/OFF switch to the OFF position.
2. Disconnect the inverter from all power.
3. Reconnect inverter to power.
4. Switch the Power ON/OFF switch to the ON position.

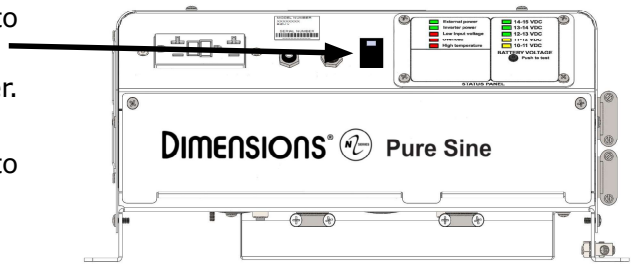

Figure 4-1, Performing an Inverter Reset

1. Ensure the inverter and the remote are disconnected from all AC and DC power.
2. After the inverter has been disconnected from all power for 30 seconds, reconnect the inverter DC disconnects (or reconnect the positive battery cable) and resume operation.

Appendix A – Specifications and Optional Equipment

A-1 Inverter Specifications

	12/1800N	12/2400N	12/3000N	12/3600NPL	12/2400DN	12/3000DN
Inverter Specifications						
Output Watts	1800W	2400W	3000W	3600W	2400W	3000W
Peak Watts	3960W	6480W	6480W	6480W	6480W	6480W
Output Voltage	120 VAC ± 5%				120x240 VAC	
Peak Output Current	44 AAC	91 AAC	91 AAC	91 AAC	91 AAC	91 AAC
Output Current	Up to 15	Up to 20	Up to 25	Up to 30	Up to 20 (10)	Up to 25 (12.5)
Output Waveform	Pure Sine Wave					
Output Frequency	60 Hz ± 0.5 Hz					
Input Voltage	10.5-16.0 VDC					
Continuous Output Amps	15.0 AAC	20.0 AAC	25.0 AAC	25.0 AAC	10.0 AAC	12.5 AAC
Efficiency	Up to 88%					
Phase	Single					
Topology	Low Frequency					
General Features and Capabilities						
Internal cooling	148 cfm single 120 mm brushless DC fan					
Overcurrent protection	Output Supplemental Circuit Breaker. Integral Overload Algorithm					
Over-temperature protection	on transformer and MOSFETS					
Corrosion protection	PCBs conformal coated, powder coated chassis/top, and stainless steel fasteners					
Safety listings	ETL listed to UL/cUL 458, CSA C22.2 No. 107.1-01					
Environmental Specifications						
Temperature (Operating/Non-operating)	-18°C to 40°C (0°F to 140°F)/-40°C to +70°C (-40°F to 158°F)					
Operating humidity	0 to 95% RH non-condensing					
Physical Specifications						
Unit dimensions (length x width x height)	15.0” x 16” x 7.5” (38.1 x 40.6 x 19.1 cm)					
Shipping dimensions (L x W x H)	21.3” x 14.6” x 12.3” (54.1 x 37.0 x 31.2 cm)					
Mounting	Shelf or wall					
Unit weight	39 lb (17.7 kg)	53 lb (24.0 kg)	55 lb (25.0 kg)	55 lb (25.0 kg)	57 lb (25.9 kg)	55 lb (25.0 kg)

Specifications @ 25°C and 12.6 VDC – Subject to change without notice.

Appendix B – Battery Information

B-1 Battery Location

Periodic maintenance (i.e., checking connections, cleaning, watering) on batteries is required. Locate the batteries in an accessible location to perform this maintenance.

Batteries must be mounted in a clean, dry, ventilated environment where they are protected from high and low temperatures. The battery bank should be located as close to the inverter as possible without limiting access to the inverter's disconnects. Longer battery cable runs tend to lose efficiency and reduce the overall performance of an inverter.

To ensure optimum performance, a ventilated battery enclosure is recommended. Two feet of clearance above the batteries is recommended for access to the battery terminals and removable caps (lead acid battery types).

WARNING

Be very careful when working around batteries, they can produce extremely high currents if they are short-circuited. Read the important safety instructions at the beginning of this manual and the precautions from the battery supplier before installing the inverter and batteries.

WARNING

Do not mount the batteries beneath the inverter (or in the same compartment). Batteries emit corrosive fumes which could damage the inverter's electronics. Never locate dedicated batteries near a vehicle/ home fuel tank containing gasoline or propane.

B-2 Battery Types

Batteries are available in different sizes, amp-hour ratings, voltage and chemistries. They are also available for starting applications (such as an automobile starting battery) and deep discharge applications. Only the lead acid deep cycle types are recommended for inverter applications; using a starting battery in an inverter (deep cycle) application will greatly shorten their useful life. Choose the batteries best suited for the inverter installation and cost. Use only the same battery type for all batteries in the bank. For best performance, all batteries should be from the same lot and date. This information is usually printed on a label located on the battery.

B-3 Battery Temperature

Battery performance of lead-acid type batteries is greatly affected by extreme temperatures. When a lead-acid type battery is cold, its effective amp-hour capacity is reduced. When determining the battery requirements needed for the inverter system, realize that the battery capacity will be reduced if they will be installed in a climate where extremely cold temperatures are expected. In this type of environment, the batteries should be located in a heated area. At the minimum, the batteries should be installed in an insulated enclosure; which will keep the batteries warmer as they are being charged.

The battery bank should also be protected from high temperatures, which will shorten battery life. In high heat situations the battery room/enclosure should be ventilated to bring in cooler air and exhaust the hotter air. The performance of the battery bank/inverter system will substantially increase by monitoring and preventing extreme temperatures around the batteries.

B-4 Battery Bank Sizing

The size of the battery bank determines how long the inverter will power the AC loads without recharging. The larger the battery bank, the longer the run time. Size your battery bank to the systems AC load requirements and length of time required to run from the batteries. In general, the battery bank should not be discharged more than 50%. Additional DC charging devices such as solar, wind, hydro, etc., can provide longer run times by recharging the batteries in the absence of AC utility or generator power.

NOTICE

For the N Series inverter to perform optimally, a minimum battery bank of 200 AH is recommended for moderate loads (<1000W) and greater than 400 AH for heavy loads (≥1000W).

B-5 Battery Bank Sizing Worksheet

Complete the steps below to determine the battery bank size required to power your AC loads:

1. Determine the daily power needed for each load

a) List all AC loads required to run; and
b) List the Watt-Hours for each load (see Table C-1 for common loads/wattage); and
c) Multiply by how many hours per day (or a fraction of an hour) each load will be used; and
d) Multiply by how many days per week you will use the listed loads; and
e) Divide by seven = **Average Daily Watt-Hours Per Load**.

Average Daily Watt-Hours Per Load				
AC load	**Watt-Hours**	**(x) hours per day**	**(x) days per week**	**(÷7) = total power**

2. Determine the total power needed each day for all the loads.

- Add *Average Daily Watt-Hours Per Load* together = **Total Daily Watt-Hours**.

Total Daily Watt-Hours

3. Determine the battery amp-hour capacity needed to run all the loads before recharging.

- Divide the *Total Daily Watt-Hours* by the nominal battery voltage of the inverter (i.e., 12, 48 volts); and

(inverter battery voltage)

÷ ____ =

- Multiply this by how many days the loads will need to run without having power to recharge the batteries (typically 3 to 5 days of storage) = **Storage Amp-Hours**.

(days of storage)

x ____ =

4. Determine how deeply you want to discharge your batteries.

- Divide the *Storage Amp-Hours* by 0.2 or 0.5 to get the **Total Amp-Hours**:

a) 0.2 = Discharges the batteries by 20% (80% remaining), this is considered the optimal level for long battery life; or

b) 0.5 = Discharges the batteries by 50% (50% remaining), this is considered a realistic trade-off between battery cost and battery life.

Total Amp-Hours

Additional compensation:

Low battery temperature: If the batteries are installed in a location that will be exposed to low temperatures, the available output will be less. In these instances, you will need to determine the lowest temperature the battery bank will experience and multiply the *Total Amp-Hours* by the multiplier below.

Temperature	80F/27C	70F/21C	60F/15C	50F/10C	40F/4C	30F/-1C	20F/-7C
Multiplier	1.00	1.04	1.11	1.19	1.30	1.40	1.59

Inverter efficiency: When the inverter is used in a back-up power application, its efficiency will not be a large concern. However, if the inverter is the primary AC source for the calculated load, the *Total Amp-Hours* should be multiplied by 1.2 to factor in an average 80% inverter efficiency.

B-6 Battery Wiring Configurations

The battery bank must be wired to match the inverter's DC input voltage. In addition, the batteries can be wired to provide additional run time. The various wiring configurations are:

B-6.1 Series Wiring

Wiring batteries in series increases the battery bank's output voltage. A series connection combines each battery in a string until the total voltage matches the inverter's DC requirement. Even though there are multiple batteries, the capacity remains the same. In Figure B-1 below, two 6 VDC/200 AH batteries are combined into a single string resulting in a 12 VDC, 200 AH bank.

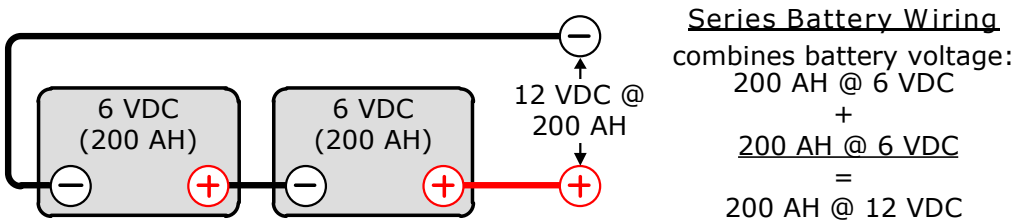

Figure B-1, Series Battery Wiring

B-6.2 Parallel Wiring

Wiring batteries in parallel increases the battery bank's amp-hour capacity, which allows the AC loads to operate for a longer time. A parallel connection combines the number of batteries in the string to increase overall battery capacity; however, the voltage remains the same. In Figure B-2 below, two 12 VDC/100 AH batteries are combined into a single 12 VDC, 200 AH battery bank.

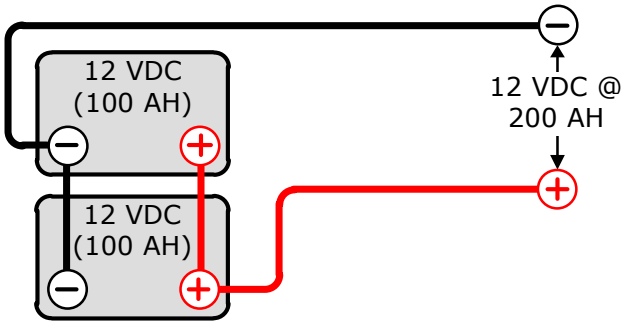

Parallel Battery Wiring
combines battery capacity:

100 AH @ 12 VDC
+
100 AH @ 12 VDC
=
200 AH @ 12 VDC

Figure B-2, Parallel Battery Wiring

B-6.3 Series-Parallel Wiring

A series/parallel configuration increases both voltage (to match the inverter's DC requirements) and amp-hour capacity (to increase run-time for operating the loads) using smaller, lower-voltage batteries. In Figure B-3 below, four 6 VDC/200 AH batteries are combined into two strings resulting in a 12 VDC, 400 AH battery bank.

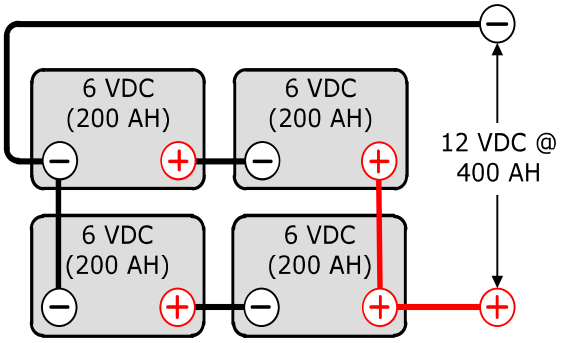

Series/ Parallel Battery Wiring
combines battery voltage and capacity:

200 AH @ 6 VDC
+
200 AH @ 6 VDC
= 200 AH @ 12 VDC

200 AH @ 6 VDC
+
200 AH @ 6 VDC
= 200 AH @ 12 VDC

+ = 400 AH @ 12 VDC

add voltage in series | add capacity in parallel | add voltage and capacity together

Figure B-3, Series-Parallel Battery Wiring

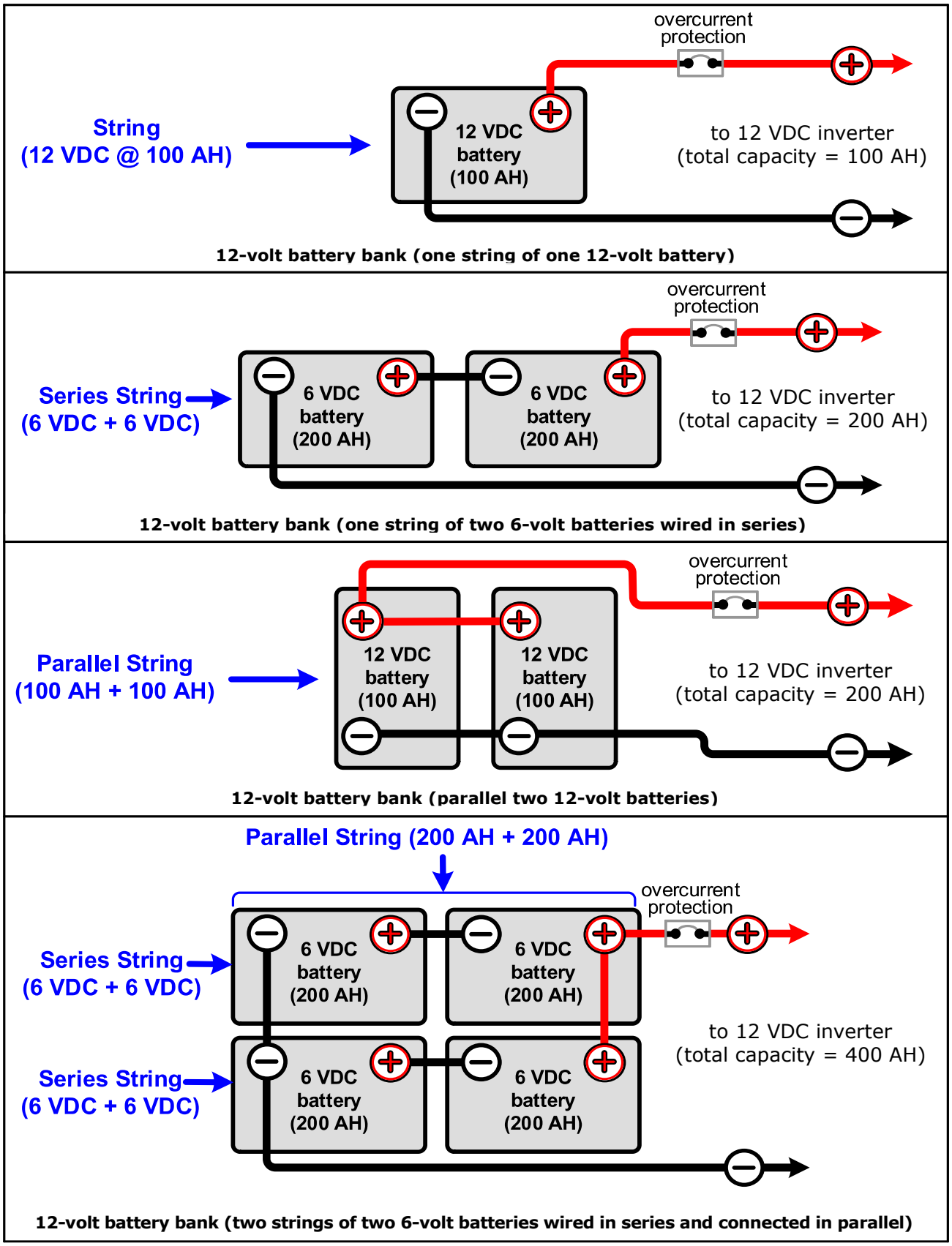

Figure B-4, Battery Bank Wiring Examples (12-volt)

Appendix C – Power Consumption & Output Waveforms

C-1 Appliances and Run Time

The L-Case N Series inverter/charger can power a wide range of household appliances including small motors, hair dryers, clocks, and other electrical devices. As with any appliance using batteries for power, there is a certain length of time that it can run—this is called "run time." Actual run time depends on several variables including the size and the type of appliance, the type of batteries installed in your application, as well as the battery's capacity and age. Other factors such as the battery's state of charge and temperature can also affect the length of time your appliances can run.

Appliances (TVs, VCRs, stereos, computers, coffee pots, incandescent lights, and toasters) can all be successfully powered by your inverter. Larger electrical appliances, however, such as stoves, water heaters, etc., can quickly drain your batteries and are not recommended for this application.

All electrical appliances are rated by the amount of power they consume (see Table C-1). The rating is printed on the product's nameplate label, usually located on its chassis near the AC power cord. Even though it is difficult to calculate exactly how long an inverter will run a particular appliance, the best advice is trial and error. Your L-Case N Series inverter has a built-in safeguard that automatically protects your batteries from over-discharge.

NOTICE

For optimum performance, a minimum battery bank of 200 AH is recommended for moderate loads (<1000W) and greater than 400 AH for heavy loads (≥1000W).

Table C-1, Typical Appliance Power Consumption

Device	Load	Device	Load	Device	Load
Light (Flo)	10W	Light (Inc)	100W	Computer	300W
Small Air Compressor	1200W	Cordless Tool Battery Charger	240W	Grinder	900W
Drill	500W	Reciprocating Saw	1560	Shop Vac	1200W

C-2 Output Waveform

The inverter's output waveform is the shape of the wave that alternating current makes as its voltage rises and falls with time (see Figure C-1 below). The three basic output waveforms are:

- **Modified Sine Wave** – Also referred to as a "quasi sine wave" or a "modified square wave". This output looks like a one-step staircase and the waveform changes its width to continually provide the correct RMS output voltage regardless of the battery voltage. Most loads that run from a sine wave will also run from a modified sine wave. However, things such as clocks and furnace controllers may have trouble.
- **Sine Wave** – An AC waveform that looks like rolling waves on water. It rises and falls smoothly with time. The grid puts out a sine waveform. Any plug-in AC equipment will operate from a sine wave output inverter.
- **Square Wave** – The simplest AC waveform. Some types of equipment behave strangely when powered from a square wave inverter.

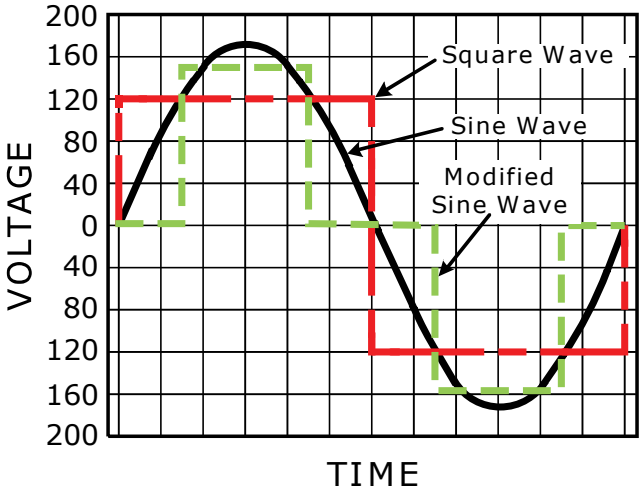

Figure C-1, AC Waveforms

Appendix D – Inverter Terminology

The following is a glossary of terms with which you may not be familiar. They appear in the various descriptions of inverter and battery charger operation.

Absorption Stage – In this second stage of three stage charging, the batteries are held at a constant voltage (the absorb voltage setting) and the battery is charged to its maximum capacity.

AC (Alternating Current) – Electrical current that varies with time (i.e., utility power). The rate at which the voltage changes polarity is the frequency in Hertz (Hz).

Ampacity – The ampacity of a wire is its current carrying capacity with reference to the cross-sectional area of the conductors, the temperature rating of the insulation and the ambient temperature.

Automatic Transfer Relay (inside the inverter) – An automatic switch that switches between Inverter and Standby mode depending on availability of AC input power. If AC is present, the unit will be a battery charger and pass power through the inverter. When the AC goes away, the unit becomes an inverter.

Bulk Charge Stage – The first stage in three stage charging. In this stage, a constant current is fed to the batteries and as they accept the current the battery voltage will rise.

CEC (Canadian Electrical Code) – The guidelines and acceptable practices for electrical installations in Canada.

Current (Amps) – The amount of electricity flowing through a conductor.

DC (Direct Current) – Electrical current that does not vary with time (i.e., battery voltage).

Deep Cycle – A deep cycle occurs when a battery is discharged to less than 20% of its capacity (80% depth-of-discharge).

Deep Cycle Battery – A battery designed to be routinely discharged to 20% of its maximum capacity without damage. This type of battery is recommended for use with an inverter system.

Derating – As an inverter (or charger) is used above its normal temperature, it's capacity to power loads (or charge) continuously is decreased.

Digital Volt Meter (DVM):

- **True RMS** – A voltmeter that incorporates a RMS converter to read true RMS for any waveform shape.
- **Averaging Type** – A voltmeter that requires a sine wave waveform shape to provide an accurate reading.

Efficiency – Usually given as a percentage, efficiency is the ratio of the output to the input. The efficiency changes with power output levels of any inverter.

Electrolyte – Typically a mixture of water and sulfuric acid that is used in lead-acid batteries; it is commonly referred to as battery acid.

Equalization – Controlled "overcharging" of the battery causing it to bubble and mix. This helps reduce stratification.

Float Stage – During the third stage of three stage charging, the voltage and current are reduced to a level that will trickle charge or maintenance charge the battery. This assures the battery remains fully charged even while sitting.

Fuse or Disconnect – When current exceeds a preset limit the fuse or disconnect will fail before the wiring or equipment it is protecting. Disconnects are also called circuit breakers. These are usually reset and can act as a switch to turn off power to equipment for servicing.

Grid (The grid) – Also called the utility grid, this refers to the public power distribution system.

Impedance – Slows the electrical flow of Alternating Current (AC).

LED (Light Emitting Diode) – A light made up of semi-conducting material.

Line Tie – Term used when the inverter is connected to public power or to the "grid" system.

Load(s) – An electrical item that draws power (i.e., lights, radio, refrigerator, etc.) to work.

Appendix D – Inverter/Charger Terminology

Locked Rotor Amps – The current drawn by an electric motor with the shaft or rotor stopped and locked in position. This can be used to determine if an inverter has enough surge current to start a motor. If the inverter is capable of producing more amperage than the locked rotor amps rating of a motor, it will most likely start the motor easily.

NEC (National Electric Code) – The guidelines and acceptable practices for electrical installations in the USA.

Off Grid – Not connected to public power in any way.

Pass Through Current – The amount of current the inverter can safely pass directly from the AC input to the AC output.

Photovoltaic (PV) – Solar powered.

Resistance (Ohms) – Slows the electrical flow of Direct Current (DC).

RMS (Root Mean Square) – A measure of AC voltage that provides the equivalent heating value across a resistor as would a DC source of the same voltage.

Sellback, or **Selling Back To The Grid or Utility-Interactive** – Some inverters have the capability to take energy stored in batteries, or from solar panels, and put it back into the utility grid. The local public utility company can compensate you for using this energy.

Shorepower – The process of providing shoreside electrical power to a boat while its main and auxiliary engines are turned off. The source for shorepower may be grid power from an electric utility company, or from an external remote generator.

Stratification – Over time, a battery's electrolyte (liquid) tends to separate. The electrolyte at the top of the battery becomes watery while at the bottom it becomes more acidic. This effect is corrosive to the plates.

Sulfating – As a battery discharges, its plates become covered with lead sulfate. During recharging, the lead sulfate leaves the plates and recombines with the electrolyte. If the lead sulfate remains on the plates for an extended period of time (over two months), it hardens, and recharging will not remove it. This reduces the effective plate area and the battery's capacity.

Temperature Compensation – Peak available battery voltage is temperature dependent. As ambient temperatures fall, the proper voltage for each charge stage needs to be increased. A Battery Temperature Sensor (BTS) automatically re-scales charge-voltage settings to compensate for ambient temperatures.

Voltage – The pressure that causes electrical flow in a circuit.

Watts – Measure of power output or utilization. Watts =Volts x Amps.

DIMENSIONS™

DMX Power

www.DMX-Power.com

122234 A User Manual, N Series L Case